Appendix A

Site Location Map


19
Port Hastings
Port Hastings
Historical Society
104
344
104
105
104
Aulds Cove
Marine Dr
Google
Imagery ©2019 CNES / Airbus, Maxar Technologies, Map data ©2019
Canada

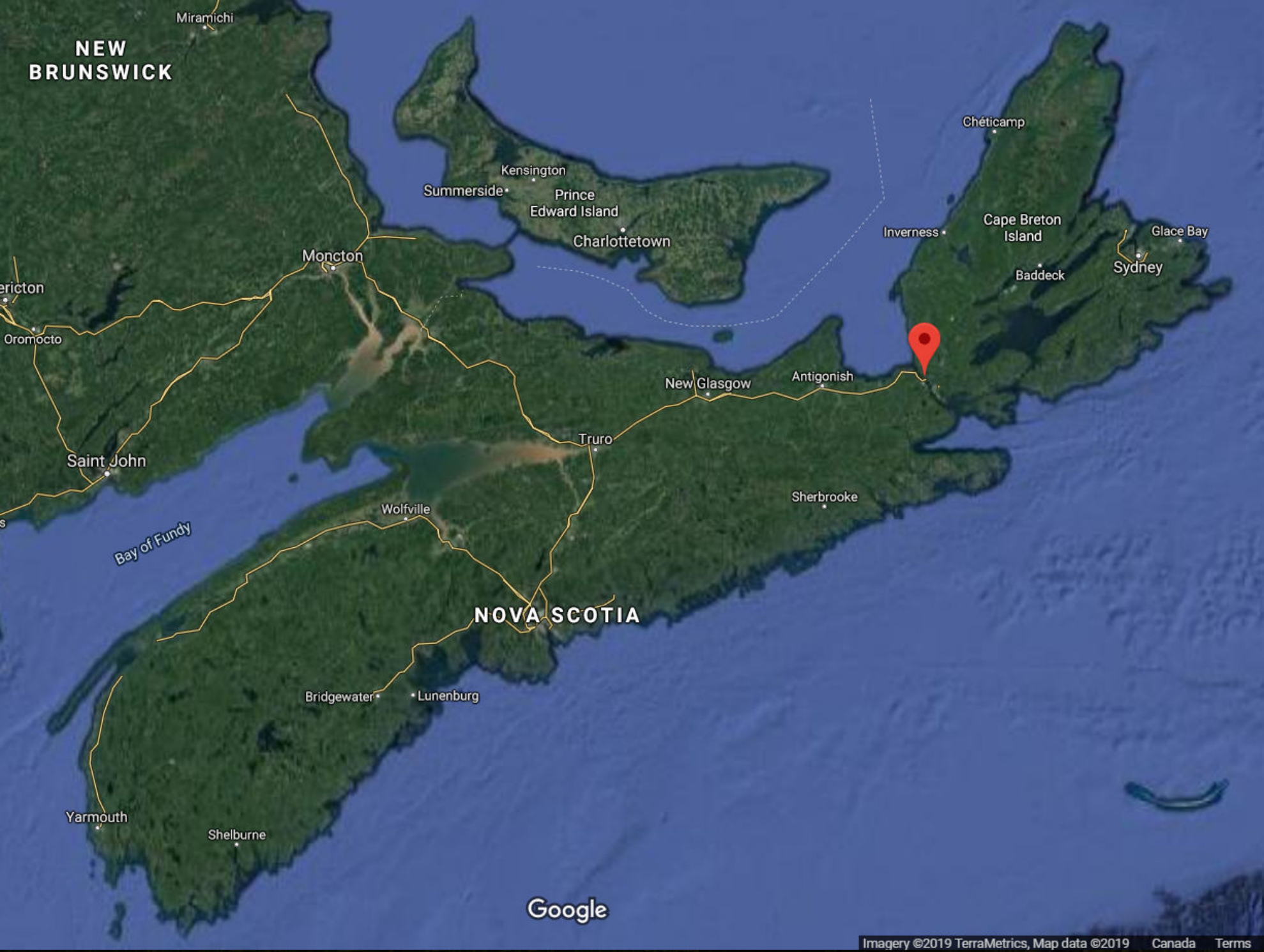
Miramichi
NEW BRUNSWICK
Kensington
Summerside
Prince Edward Island
Charlottetown
Chéticamp
Inverness
Cape Breton Island
Glace Bay
Sydney
Baddeck
Moncton
ericton
Oromocto
New Glasgow
Antigonish
Truro
Saint John
Sherbrooke
Wolfville
Bay of Fundy
NOVA SCOTIA
Bridgewater
Lunenburg
Yarmouth
Shelburne
Google
Imagery ©2019 TerraMetrics, Map data ©2019
Canada
Terms

Appendix B

Site Specific Wind Pressure Data

Site-Specific 10-yr. Wind Pressure Report (V2.2 2019-04-22)

Site Information:

Name:	T2203 Canso Canal MCTS (Radar), NS
Latitude:	45° 38' 55.75" N
Longitude:	61° 24' 51.14" W
Tower Height (m):	24.4
Elevation MSL (m):	4

Results:

Note: **Following direction from the S37 Committee, Qe can no longer be provided.**

Q_{nbc} (Pa):	570	$Q_{nbc} = 570(Z/10)^{0.2}$	V_{nbc} = 66.42 mph
Icing:	As per CAN/CSA S37-18		
Q_{Min} (Pa)	250	$Q_{Min} = 250(Z/10)^{0.2}$	V_{Min} = 43.99 mph

Wind Pressure Formula (for z in metres and result in Pa):

$$Q_h = 0.12919 \{[0.0000\, e^{(-0.0000\, z)} + 1.0000 \ln(z/0.0100) / \ln(z/0.0100)]\, 70.80\}^2 \, (z/10)^{0.200}$$

Profile Formula General Form:

$$Q_h = 0.12919 \{[a_1\, e^{(-a2\, z)} + a_3 \ln(z/z_h) / \ln(z/z_{01})]\, v_{01}\}^2 \, (z/10)^{0.200}$$

Site Values of Coefficients:

$$a_1 = 0.0000,\ a_2 = 0.0000,\ a_3 = 1.0000,\ z_h = 0.0100,\ z_{01} = 0.0100,\ v_{01} = 70.80 \text{ mph}$$

Definitions

Tower Height: Height of the tower from ground level at the base of the tower to the top of the structure.
Q_{nbc}: Regionally representative reference wind pressure at 10 m in the format of the National Building Code of Canada and the Q_{nbc} value is profiled with the $^2/_{10}$ power law.
Q_{Min}: Minimum reference wind pressure (320 Pa, 300 Pa, and 250 Pa for the 50-year, 30-year, and 10-year return periods respectively) profiled with the $^2/_{10}$ power law as per Section 5.4.1 of S37-18.

Wind Pressure Formula: Formula for the design wind pressure as a function of height. (Ref.: S37-18, 5.3.1)
Height (Z): the vertical distance (m) above ground level at the base of the tower.

Note: No wind pressure value less than 90% of the value at 10 m should be used for heights less than 10 m a.g.l.

These wind pressures were evaluated using a version of the methods described by Taylor and Lee (1984) "Simple Guidelines for Estimating Wind Speed Variations Due to Small Scale Topographic Features", Climatological Bulletin 18 2, using the Boyd (1969) analysis of thirty year return period wind speeds (which is also used for the National Building Code of Canada), modified by a technique described by Wieringa (1980) "Representativeness of Wind Observations at Airports" Bulletin of the American Meteorological Society, 61 9, as input data. The uncertainty in NBCC regionally representative reference wind pressures is about [+15%, -15%].

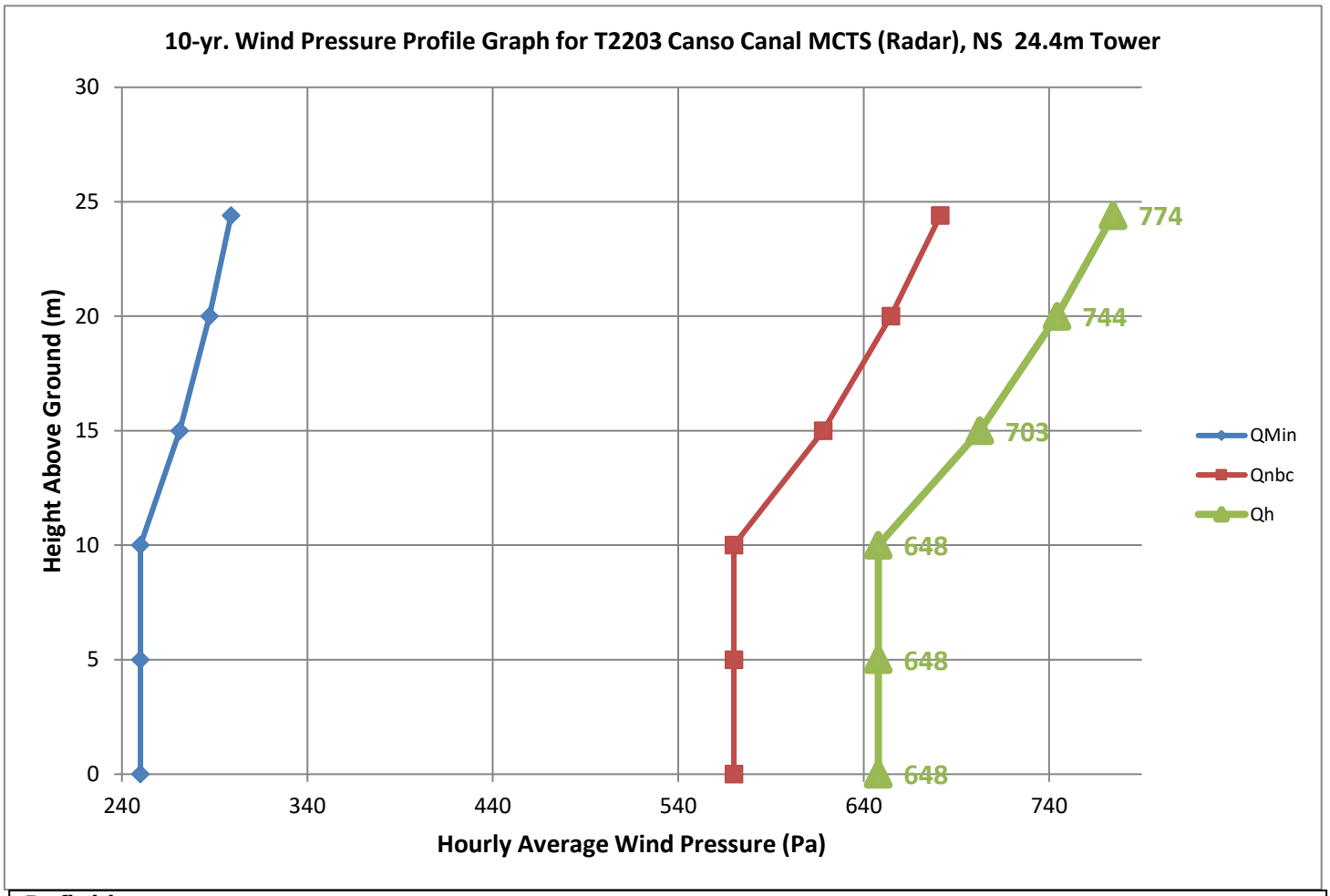

Definitions

Tower Height: Height of the tower from ground level at the base of the tower to the top of the structure.
Q_{nbc}: Regionally representative reference wind pressure at 10 m in the format of the National Building Code of Canada and the Q_{nbc} value is profiled with the $^2/_{10}$ power law.
Q_{Min}: Minimum reference wind pressure (320 Pa, 300 Pa, and 250 Pa for the 50-year, 30-year, and 10-year return periods respectively) profiled with the $^2/_{10}$ power law as per Section 5.4.1 of S37-18.

Wind Pressure Formula: Formula for the design wind pressure as a function of height. (Ref.: S37-18, 5.3.1)
Height (Z): the vertical distance (m) above ground level at the base of the tower.

Note: No wind pressure value less than 90% of the value at 10 m should be used for heights less than 10 m a.g.l.

These wind pressures were evaluated using a version of the methods described by Taylor and Lee (1984) "Simple Guidelines for Estimating Wind Speed Variations Due to Small Scale Topographic Features", Climatological Bulletin 18 2, using the Boyd (1969) analysis of thirty year return period wind speeds (which is also used for the National Building Code of Canada), modified by a technique described by Wieringa (1980) "Representativeness of Wind Observations at Airports" Bulletin of the American Meteorological Society, 61 9, as input data. The uncertainty in NBCC regionally representative reference wind pressures is about [+15%, -15%].

Site-Specific 30-yr. Wind Pressure Report (V2.2 2019-04-22)

Site Information:

Name:	T2203 Canso Canal MCTS (Radar), NS
Latitude:	45° 38' 55.75" N
Longitude:	61° 24' 51.14" W
Tower Height (m):	24.4
Elevation MSL (m):	4

Results:

Note: **Following direction from the S37 Committee, Qe can no longer be provided.**

Q_{nbc} (Pa):	690	$Q_{nbc} = 690(Z/10)^{0.2}$	V_{nbc} = 73.08 mph
Icing:	As per CAN/CSA S37-18		
Q_{Min} (Pa)	300	$Q_{Min} = 300(Z/10)^{0.2}$	V_{Min} = 48.19 mph

Wind Pressure Formula (for z in metres and result in Pa):

$$Q_h = 0.12919 \{[0.0000\, e^{(-0.0000\, z)} + 1.0000\, \ln(z/0.0100) / \ln(z/0.0100)]\, 77.49\}^2\ (z/10)^{0.200}$$

Profile Formula General Form:

$$Q_h = 0.12919 \{[a_1\, e^{(-a2\, z)} + a_3\, \ln(z/z_h) / \ln(z/z_{01})]\, v_{01}\}^2\ (z/10)^{0.200}$$

Site Values of Coefficients:

$$a_1 = 0.0000,\ a_2 = 0.0000,\ a_3 = 1.0000,\ z_h = 0.0100,\ z_{01} = 0.0100,\ v_{01} = 77.49 \text{ mph}$$

Definitions

Tower Height: Height of the tower from ground level at the base of the tower to the top of the structure.
Q_{nbc}: Regionally representative reference wind pressure at 10 m in the format of the National Building Code of Canada and the Q_{nbc} value is profiled with the $^2/_{10}$ power law.
Q_{Min}: Minimum reference wind pressure (320 Pa, 300 Pa, and 250 Pa for the 50-year, 30-year, and 10-year return periods respectively) profiled with the $^2/_{10}$ power law as per Section 5.4.1 of S37-18.

Wind Pressure Formula: Formula for the design wind pressure as a function of height. (Ref.: S37-18, 5.3.1)
Height (Z): the vertical distance (m) above ground level at the base of the tower.

Note: No wind pressure value less than 90% of the value at 10 m should be used for heights less than 10 m a.g.l.

These wind pressures were evaluated using a version of the methods described by Taylor and Lee (1984) "Simple Guidelines for Estimating Wind Speed Variations Due to Small Scale Topographic Features", Climatological Bulletin 18 2, using the Boyd (1969) analysis of thirty year return period wind speeds (which is also used for the National Building Code of Canada), modified by a technique described by Wieringa (1980) "Representativeness of Wind Observations at Airports" Bulletin of the American Meteorological Society, 61 9, as input data. The uncertainty in NBCC regionally representative reference wind pressures is about [+15%, -15%].

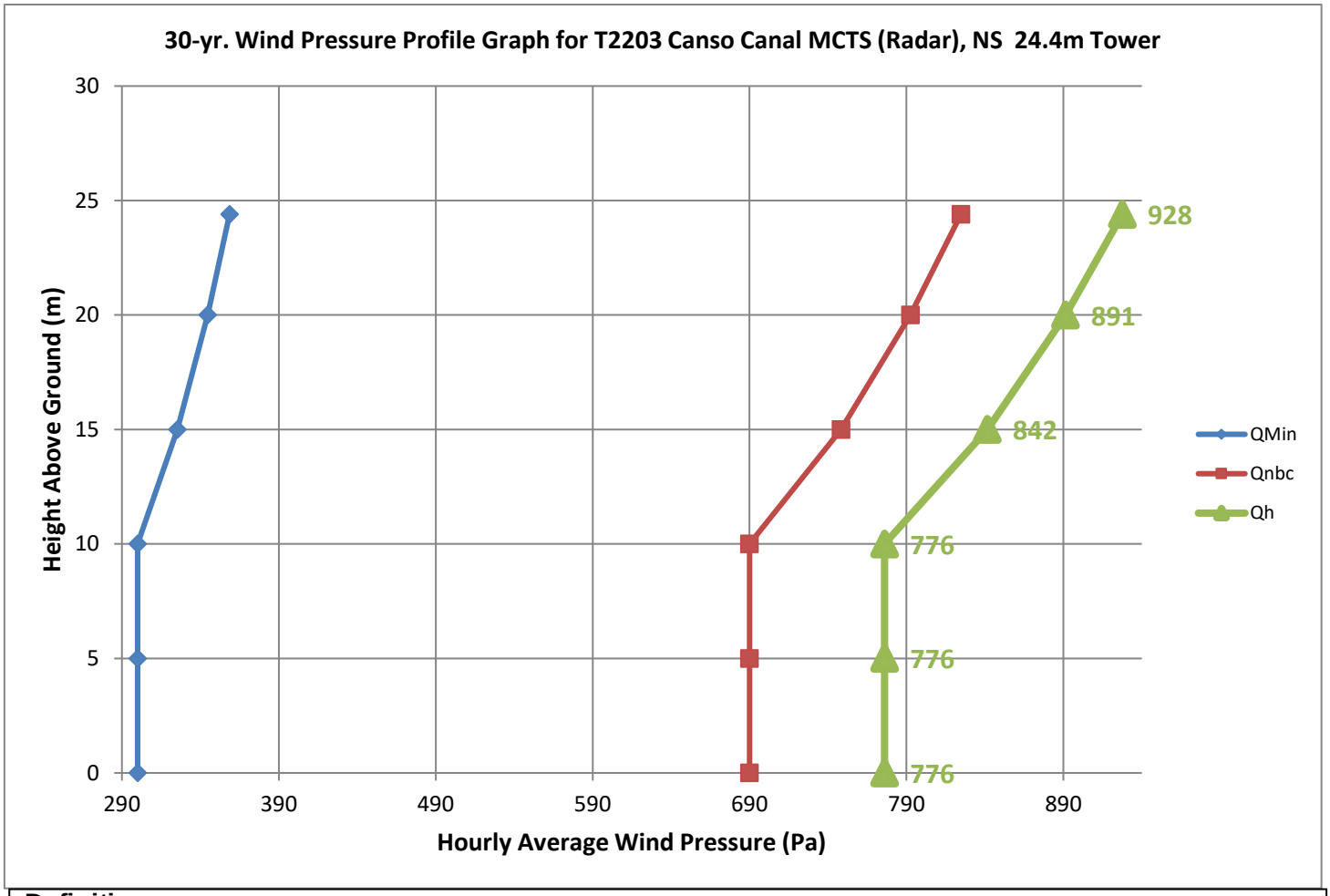

Definitions

Tower Height: Height of the tower from ground level at the base of the tower to the top of the structure.
Q_{nbc}: Regionally representative reference wind pressure at 10 m in the format of the National Building Code of Canada and the Q_{nbc} value is profiled with the $^2/_{10}$ power law.
Q_{Min}: Minimum reference wind pressure (320 Pa, 300 Pa, and 250 Pa for the 50-year, 30-year, and 10-year return periods respectively) profiled with the $^2/_{10}$ power law as per Section 5.4.1 of S37-18.

Wind Pressure Formula: Formula for the design wind pressure as a function of height. (Ref.: S37-18, 5.3.1)
Height (Z): the vertical distance (m) above ground level at the base of the tower.

Note: No wind pressure value less than 90% of the value at 10 m should be used for heights less than 10 m a.g.l.

These wind pressures were evaluated using a version of the methods described by Taylor and Lee (1984) "Simple Guidelines for Estimating Wind Speed Variations Due to Small Scale Topographic Features", Climatological Bulletin 18 2, using the Boyd (1969) analysis of thirty year return period wind speeds (which is also used for the National Building Code of Canada), modified by a technique described by Wieringa (1980) "Representativeness of Wind Observations at Airports" Bulletin of the American Meteorological Society, 61 9, as input data. The uncertainty in NBCC regionally representative reference wind pressures is about [+15%, -15%].

Site-Specific 50-yr. Wind Pressure Report (V2.2 2019-04-22)

Site Information:

Name:	T2203 Canso Canal MCTS (Radar), NS
Latitude:	45° 38' 55.75" N
Longitude:	61° 24' 51.14" W
Tower Height (m):	24.4
Elevation MSL (m):	4

Results:

Note: **Following direction from the S37 Committee, Qe can no longer be provided.**

Q_{nbc} (Pa):	740	$Q_{nbc} = 740(Z/10)^{0.2}$	V_{nbc} = 75.68 mph
Icing:	As per CAN/CSA S37-18		
Q_{Min} (Pa)	320	$Q_{Min} = 320(Z/10)^{0.2}$	V_{Min} = 49.77 mph

Wind Pressure Formula (for z in metres and result in Pa):

$$Q_h = 0.12919 \{[0.0000\, e^{(-0.0000\, z)} + 1.0000 \ln(z/0.0100) / \ln(z/0.0100)]\, 80.55\}^2 \, (z/10)^{0.200}$$

Profile Formula General Form:

$$Q_h = 0.12919 \{[a_1\, e^{(-a2\, z)} + a_3 \ln(z/z_h) / \ln(z/z_{01})]\, v_{01}\}^2 \, (z/10)^{0.200}$$

Site Values of Coefficients:

$$a_1 = 0.0000,\ a_2 = 0.0000,\ a_3 = 1.0000,\ z_h = 0.0100,\ z_{01} = 0.0100,\ v_{01} = 80.55 \text{ mph}$$

Definitions

Tower Height: Height of the tower from ground level at the base of the tower to the top of the structure.
Q_{nbc}: Regionally representative reference wind pressure at 10 m in the format of the National Building Code of Canada and the Q_{nbc} value is profiled with the $^2/_{10}$ power law.
Q_{Min}: Minimum reference wind pressure (320 Pa, 300 Pa, and 250 Pa for the 50-year, 30-year, and 10-year return periods respectively) profiled with the $^2/_{10}$ power law as per Section 5.4.1 of S37-18.

Wind Pressure Formula: Formula for the design wind pressure as a function of height. (Ref.: S37-18, 5.3.1)
Height (Z): the vertical distance (m) above ground level at the base of the tower.

Note: No wind pressure value less than 90% of the value at 10 m should be used for heights less than 10 m a.g.l.

These wind pressures were evaluated using a version of the methods described by Taylor and Lee (1984) "Simple Guidelines for Estimating Wind Speed Variations Due to Small Scale Topographic Features", Climatological Bulletin 18 2, using the Boyd (1969) analysis of thirty year return period wind speeds (which is also used for the National Building Code of Canada), modified by a technique described by Wieringa (1980) "Representativeness of Wind Observations at Airports" Bulletin of the American Meteorological Society, 61 9, as input data. The uncertainty in NBCC regionally representative reference wind pressures is about [+15%, -15%].

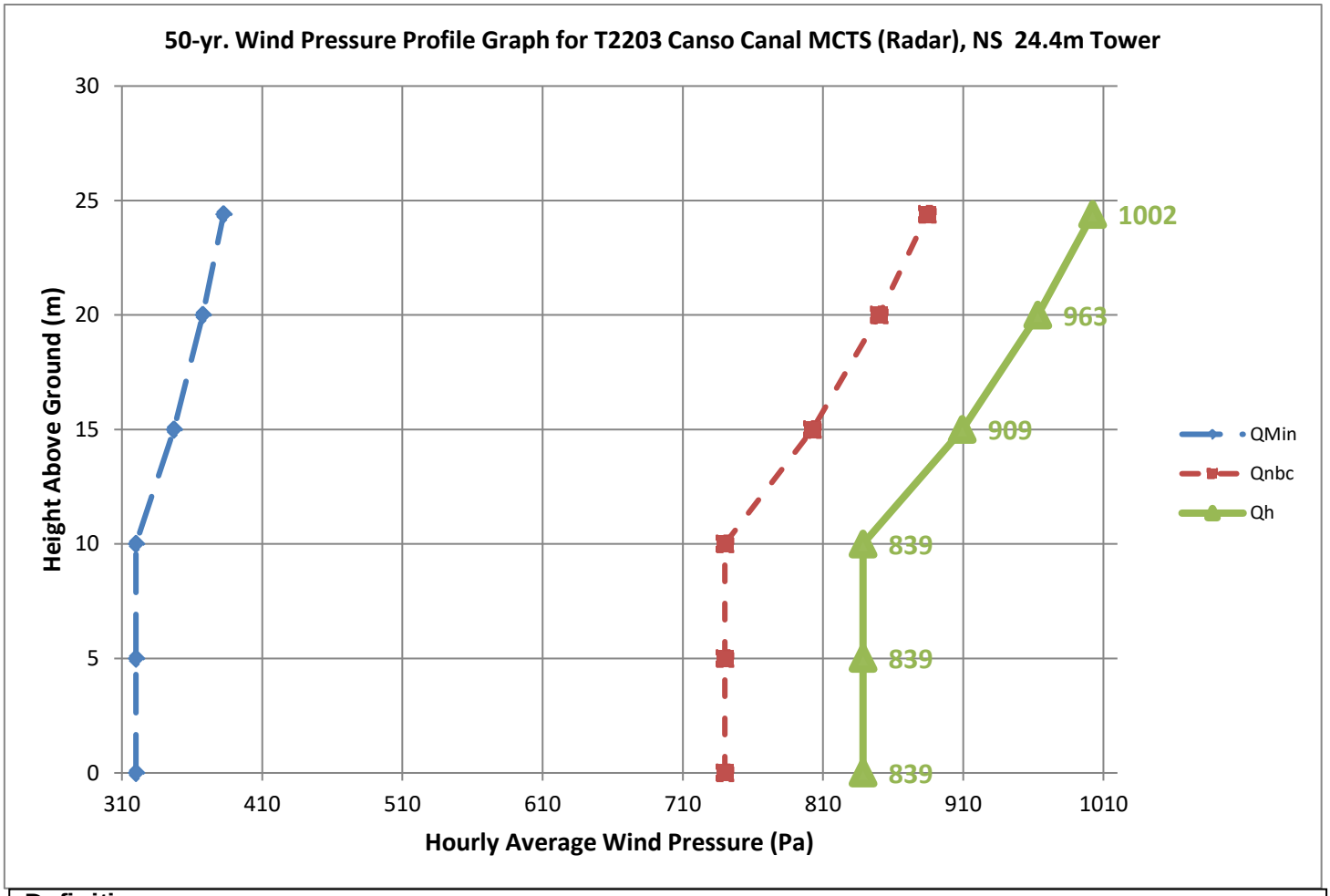

Definitions

Tower Height: Height of the tower from ground level at the base of the tower to the top of the structure.
Q_{nbc}: Regionally representative reference wind pressure at 10 m in the format of the National Building Code of Canada and the Q_{nbc} value is profiled with the $^2/_{10}$ power law.
Q_{Min}: Minimum reference wind pressure (320 Pa, 300 Pa, and 250 Pa for the 50-year, 30-year, and 10-year return periods respectively) profiled with the $^2/_{10}$ power law as per Section 5.4.1 of S37-18.

Wind Pressure Formula: Formula for the design wind pressure as a function of height. (Ref.: S37-18, 5.3.1)
Height (Z): the vertical distance (m) above ground level at the base of the tower.

Note: No wind pressure value less than 90% of the value at 10 m should be used for heights less than 10 m a.g.l.

These wind pressures were evaluated using a version of the methods described by Taylor and Lee (1984) "Simple Guidelines for Estimating Wind Speed Variations Due to Small Scale Topographic Features", Climatological Bulletin 18 2, using the Boyd (1969) analysis of thirty year return period wind speeds (which is also used for the National Building Code of Canada), modified by a technique described by Wieringa (1980) "Representativeness of Wind Observations at Airports" Bulletin of the American Meteorological Society, 61 9, as input data. The uncertainty in NBCC regionally representative reference wind pressures is about [+15%, -15%].

Appendix C
Site Survey

Fisheries and Oceans

Canadian Coast Guard Branch

Maritimes Region

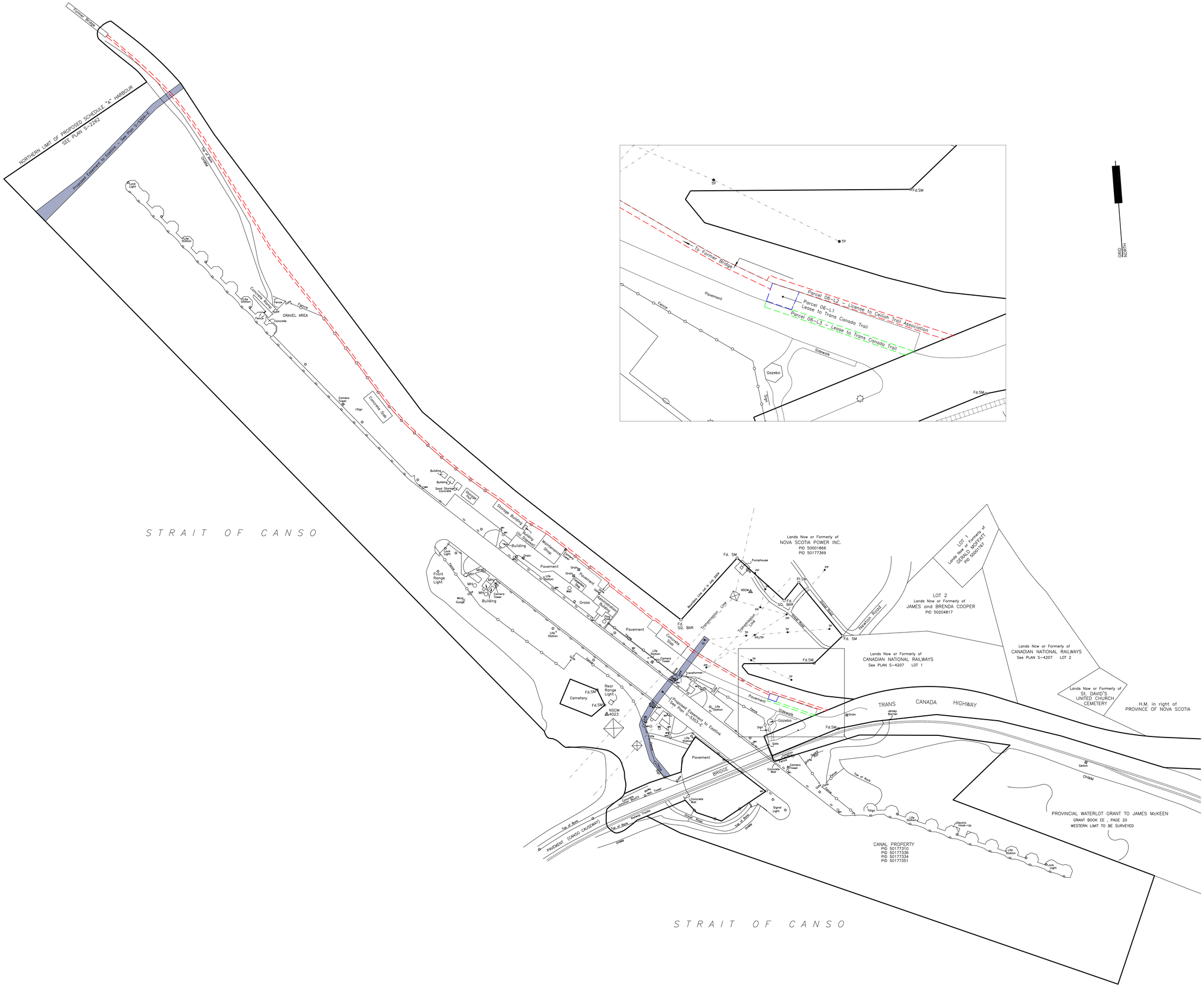

LEGEND:

- SM — SURVEY MARKER
- PP/LP — POWER/LAMP POLE
- NOVA SCOTIA COORDINATE MONUMENT
- DERRICK
- LAMP STANDARD
- OHWM — ORDINARY HIGH WATER MARK
- G/R — GUARDRAIL
- FD/PL — FOUND/PLACED
- PROPERTY BOUNDARIES
- PROPOSED PROPERTY BOUNDARIES
- FIRE HYDRANT
- WATER VALVE
- MH — MANHOLE
- BOLLARD
- ELECTRICAL OUTLET
- WATER TAP/OUTLET
- CLEAT
- OUTFLOW PIPE
- GUARD POST

COMPOSITE PLAN OF CANSO CANAL

INVERNESS COUNTY NOVA SCOTIA

SCALE 1:1250

25 12.5 0 25 50 75 100 125

METRES

PUBLIC WORKS AND GOVERNMENT SERVICES CANADA	S-4196-L1

Appendix D
Radar
Antenna Unit
Loading
Requirements

Wind**	Operational:	- to 160 km/hr (25' and 7' - 18' antennas) - to 190 km/hr (21' antenna)
	Survival (free rotating):	- 240 km/hr (25' antenna) - 250 km/hr (7' – 18' antenna) - 260 km/hr (21' antenna)
Ice Loading**	Operational:	Must start up rotating* and continue operating without structural damage with up to: - 20 mm ice (25' and 21' antennas) - 12.7mm ice (7' – 18' antennas).
	Survival (non-operational):	- 30 mm ice (25' and 21' antennas) - 25.4mm ice (7' – 18' antennas).

Appendix E
Grounding
Schedule and
Layout

PRODUIT PAR DAO

SIGNALER LES ERREURS OU LES OMISSIONS AU GESTIONNAIRE SLI

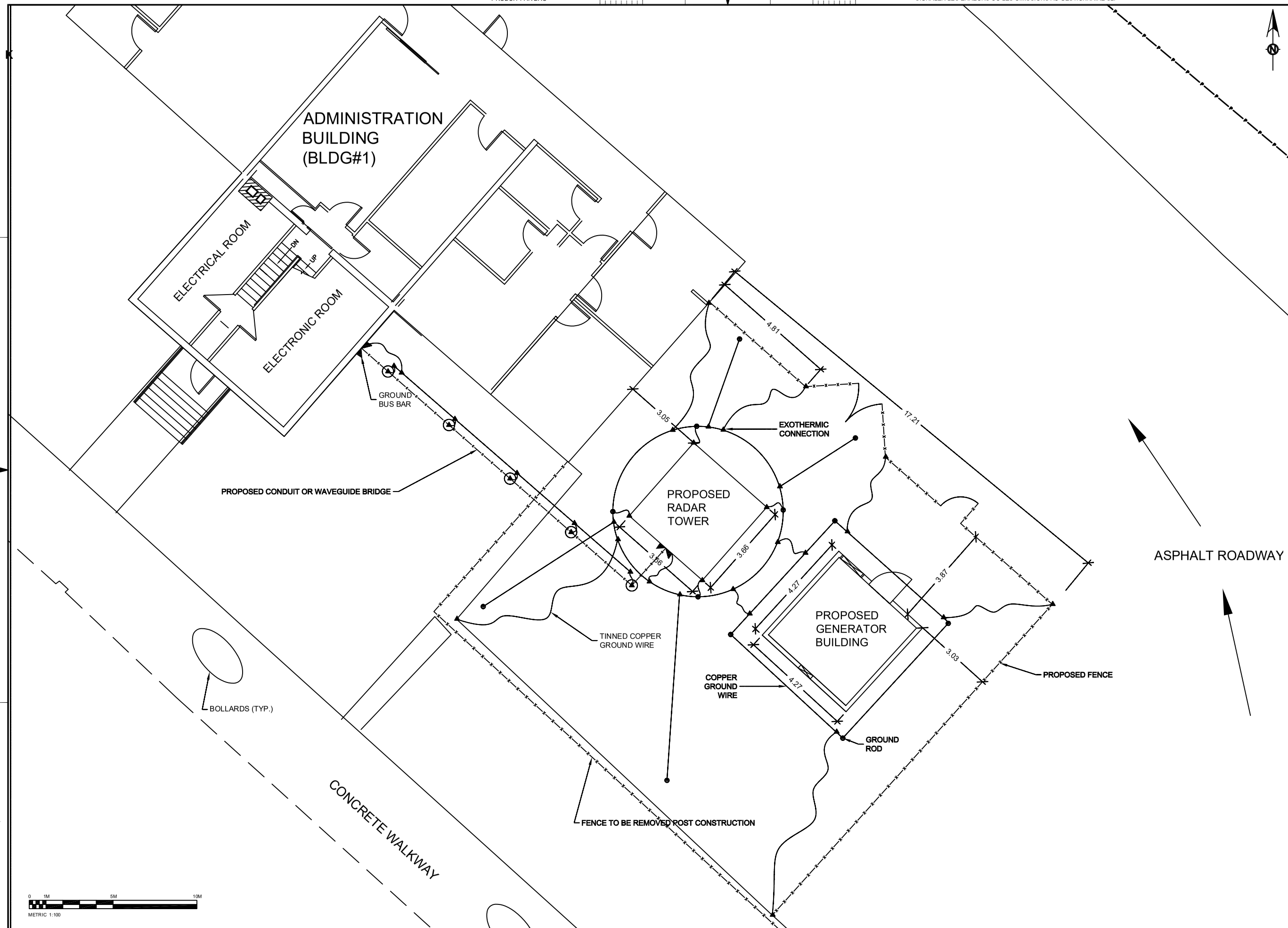

Fisheries and Oceans Canada / Pêches et Océans Canada

Canadian Coast Guard / Garde côtière Canadienne

Vendor Information / Sous-traitant

NOTES

1. This sketch is NOT FOR SURVEY PURPOSES
2. Measurements are Metric and Bearings are Grid.
3. Datum: NAD83 (CSRS) UTM Zone 20
4. Nova Scotia Co-ordinate Monument

NSCM
Northing
Easting
Elevation

0	DESCRIPTION	BY	yyyy-mm-dd
rev	description	by par	date

Asset - Actif

CANSO CANAL,NS

T2203

Drawing - Dessin

PROPOSED RADAR GROUNDING LAYOUT

designed - conception	date
P.MARTIN	2019-12-6
drawn - dessiné	date
P.MARTIN	2019-12-9
checked - vérifié	date
N/A	N/A
approved - approuvé	date
N/A	N/A
CCG ref. no. - no. réf. GCC	scale - échelle
CIVIL-T2203-2019_12_04	1:100
drawing no. - no. dessin	sheet-feuille / rev-rév
C3	1/1 / 0

File / Fichier: Printed / Imprimé:

Arch D

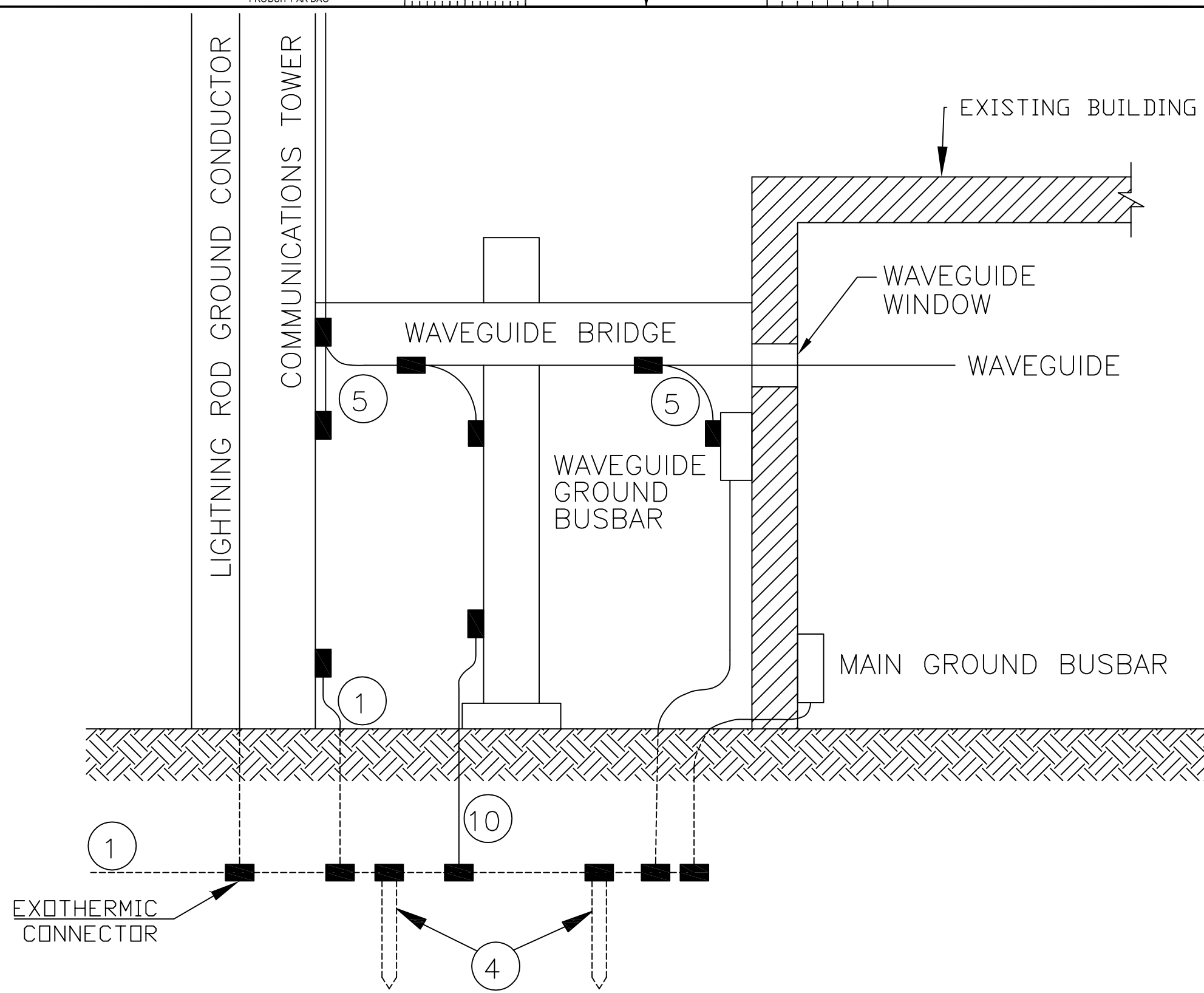

BUILDING GROUND ENTRANCE

Fisheries and Oceans Canada / Pêches et Océans Canada; Canadian Coast Guard / Garde côtière Canadienne	designed - conception: DESIGNED, date 2018-10-05	checked - vérifié, date				Asset - Actif: Canso Canal, Nova Scotia	Drawing - Dessin: External Grounding Grid Layout
	drawn - dessiné: DRAWN, date 2018-11-20	approved - approuvé, date	0	DESCRIPTION	BY	yyyy-mm-dd	
	CCG ref. no. - no. réf. GCC: REF NO / PROJ NO / FILE NO	scale - échelle: SCALE	rev	description	by par	Date	drawing no. - no. dessin: DWG NUMBER - NO DESSIN; sheet-feuille 03/04; rev 0

DWG NUMBER - NO DESSIN

DWG NUMBER - NO DESSIN

ANSI B

File / Fichier: GROUNDING GUIDE.DWG - Printed / Imprimé: 2019/12/03 4:33

millimeters / millimètres

GROUNDING SCHEDULE

ITEM NO.	DESCRIPTION	ITEMS	REQUIREMENTS
1	3 STRANDED COPPER CONDUCTORS, ONE FROM EACH TOWER LEG, BONDED TO THE TOWER GROUND RING BELOW GRADE, CAD WELD BEST. NOTE: ANYTHING ABOVE GRADE MUST BE TINNED COPPER.	TOWER GROUND	2/0 AWG
2	STANDARD COPPER CABLE BURIED AT LEAST 30' BELOW GRADE/BELOW FROST LEVEL, 24" AWAY FROM THE TOWERS FOUNDATION & BONDED TO EACH OF THE 4 DOWN–LEADS FROM TOWER.	BASE RING CONDUCTOR	2/0 AWG
3	THE RING MUST ALSO BE BONDED BY 2 SEPERATE GROUND CONDUCTORS TO THE BUILDING PERIMETER GROUND WHERE POSSIBLE.		(10ft X 3/4in) (3m X 19mm) COPPER CLAD
4	MINIMUM PLACEMENT OF 2 GROUND RODS AT OPPOSITE ENDS OF TOWER FOUNDATION. GROUND RODS TO BE AT TWICE THEIR LENGTH APART FROM EACH OTHER.	GROUND RODS	2/0 AWG
5	TINNED COPPER BAR WITH PRE–DRILLED HOLES AT TOP OF TOWER, EVERY 200FT (60m), NEAR BASE OF TOWER AND JUST BELOW CABLE ENTRY PORTS INTO BUILDING. TGB SHOULD BE INSTALLED JUST BELOW WHERE THE TRANSMISSION LINES MOVE AWAY FROM THE TOWER ON THEIR HORIZONTAL RUN TO THE CABLE ENTRY PORT FOR CABLING GROUNDING KIT CONNECTIONS.	TOWER GROUND BUS BAR	MINIMUM 2.5"X12"x0.25" (63.5 X 304.8 X 6.35mm)
6	JUST BELOW ANTENNA TO GALVANIZED TOWER LEG AND/OR TOWER GROUND BUS BAR, EVERY 200FT NEAR BASE OF TOWER AND AT CABLE ENTRY PORT.	TRANSMISSION LINE GROUNDING	STANDARD COMMERCIAL CABLE GROUND KITS
7	A LIGHTNING ROD SHALL BE INSTALLED SUCH THAT THE ROD IS AT LEAST 2m HIGHER THAN THE STRUCTURE AND ANY ANTENNA MOUNTED ON TOP OF THE STRUCTURE. THE BASE OF THE LIGHTNING ROD SHALL BE CONNECTED TO THE TOWER. A GROUND CONDUCTOR SHALL BE CONNECTED TO THE LIGHTNING ROD USING A THERMITE CONNECTOR AND TO THE TOWER AT A MINIMUM SPACING OF 3m USING BOLTED CONNECTORS. THIS CONDUCTOR SHALL BE CONNECTED DIRECTLY TO THE MAIN EXTERNAL BURIED GROUND GRID USING A THERMITE CONNECTOR.	LIGHTNING ROD AND CONDUCTOR	COPPER CLAD STEEL RODS/ 2/0 AWG
8	BOND NEW TOWER BASE RING CONDUCTOR TO EXISTING FENCE GROUNDING	TOWER GROUND CONDUCTOR	2/0 AWG
9	TO BE BONDED WITH GREEN JACKETED, STRANDED BONDING JUMPER. CABLE BRIDGE TO BE BONDED TO SUPPORT POSTS. BOND TO POST TO BE CAD–WELDED. CABLE BRIDGE TO BE ISOLATED FROM TOWER.	WAVE GUIDE BRIDGE	#6 AWG
10	WAVEGUIDE POSTS TO BE GROUNDED WITH CONDUCTOR AND GROUND RODS AND BONDED TO BOTH TOWER BASE RING CONDUCTOR AND BUILDING PERIMETER RING.	WAVEGUIDE POST CONDUCTORS	2/0 AWG

Appendix F
Existing
Radar
Antenna Unit
Manual

CHL NETHERLANDS B.V.
Christiaan Huygens Laboratorium

Installation and maintenance manual

Radar antenna system type SGX38.0H21-IC2

Canadian Coast Guard

Manual issue: a

Customer	:	**Kongsberg Norcontrol IT AS**
Order number	:	**13436**
Customer project no.	:	**453700**
CHL project number	:	**2010016**
Issue date(s)	:	**23 September 2010 (issue 'a')**

1 Introduction

The type SGX38.0H21-IC2 radar antenna system (see drawing no. C2010016-1 in Chapter 7 for an outline of the system) consist of a type SGX38.0H21-IC2 X-band radar antenna, a type ST2 antenna turning unit (ATU) and an ABB type ACS550-01-46A-2 frequency inverter to turn the antenna at a speed of 12 or 24 revolutions per minute in a clockwise direction (as seen from above).

Photo1-1: Radar antenna system type SGX38.0H21-IC2 with support for platform mounting

The type SGX38.0H21-IC2 antenna is 21 feet (6.34 metres) long, has a horizontal beam width of < 0.40°, a vertical beam width of < 11° and a quasi inverse cosec^2 vertical radiation pattern. Its gain is ≥ 38.0 dB.

The type ST2 ATU consists of a cylindrically shaped gearbox, a 3-phase electric motor to drive the gearbox, a one-channel X-band microwave rotary joint and a dual optical rotary shaft encoder assembly to provide the antenna bearing to the radar system.
The ATU has been delivered with a 1000 mm high support (pedestal) for platform mounting of the antenna system. The support has two hatches, which give access to the gearbox, the electric motor, the rotary joint and the shaft encoder assembly.

The ATU is virtually maintenance free. Oil change is in principle not required until the recommended overhaul after nine years of operation. Since the lower shaft bearings are oil lubricated and the upper shaft bearings have long-term grease filling, no regular grease lubrication of these bearings is required.

For reliable operation and a long life-time it is recommended that the ATU is overhauled after every ten years of continuous operation, for which it is to be returned to the factory.

The system is fitted with a lightning protection system. The lightning protection system consists of six lightning arresters, which are mounted to the rear of the antenna and protrude approx. 0.4 m above the antenna, and a rotary spark gap assembly. With the rotary spark assembly the lightning energy is lead from the rotating antenna to the lightning protection earth.

The radar antenna system is furthermore fitted with the extended temperature option to operate the antenna system at temperatures down to -40°C.

2 Specifications

2.1 Antenna type SGX38.0H21-IC2

Electrical

Type	:	End-fed slotted waveguide
Polarization	:	Horizontal
Frequency band	:	8900 ± 30 MHz and 9300 ± 200 MHz
Gain	:	≥ 38.0 dB
VSWR	:	≤ 1.20
Maximum power input	:	150 kW peak / 30 W average
Beam width -3 dB level	:	< 0.40º (typical 0.36º)
20 dB level	:	< 1.00º
Side lobes	:	< -28 dB within ± 5º
		< -30 dB from ± 5º to ± 10º
		< -35 dB outside ± 10º
Squint range of main beam	:	Approx. +0.29º to -0.29º with respect to bore sight at 8900 MHz Approx. +1.9º to -1.9º with respect to bore sight at 9300 MHz
Vertical radiation pattern		
Shape	:	Quasi inverse cosecant square
Beam width -3 dB level	:	≤ 11.0º (typical 8.9º)

Mechanical

Dimensions (L x W x H)	:	6369 x 984 x 551 mm
Weight	:	236 kg

Environmental

Wind speed operational	:	150 km/h
Wind speed survival	:	240 km/h
Temperature range	:	-40º C to +55º C
Relative humidity	:	100%

2.2 Antenna turning unit type ST2

Mechanical

Weight loading	:	6000 N max.
Bending moment antenna shaft	:	10,000 Nm
Rotational speed antenna shaft	:	23 (-4%) rpm (at 60 Hz mains)
Backlash antenna shaft	:	Max. 3'
Maximum driving torque	:	Approx. 1920 Nm
Lubrication gear wheels and lower shaft bearings	:	Dip lubrication
Lubrication upper shaft bearings	:	Long-term grease
Lubricant	:	Shell Omala HD220 oil
Oil filling gearbox	:	Approx. 28 litres
Rated motor turning speed	:	1740 rpm
Gearbox gear wheel ratio	:	77.29 : 1
Motor coupling type	:	Elastomer insert coupling

Electrical

Motor type	:	3-phase, squirrel-cage
Motor supply	:	50 Hz: 230/400 ± 5% VAC(▲/Y), 4 kW, 14.6/8.4 A 60 Hz: 265/460 ± 5% VAC(▲/Y), 4.6 kW, 7.9 A (Y)
Gearbox heating elements	:	230 VAC / 1380 W (3 x 460 W)
Contact rating gearbox thermostat switch	:	250 VAC, 8 A
Support heaters	:	120-240 VAC/DC, 200 W (4 x 50 W)
Support cooling fan	:	230 VAC, 50/60 Hz, 41/38 W

Environmental

Temperature range	:	-40° to +45°C
Relative humidity	:	100%
Sound pressure level	:	< 65 dBA (measured at 1 metre in the open field)

Dimensions

Excluding support	:	Φ 770 x 1063 mm
Including support	:	Φ 1050 x 1267mm

Weight

Including support and oil	:	Approx. 470 kg
Including support, without oil	:	Approx. 445 kg
Excluding support and oil	:	Approx. 313 kg

2.3 Antenna system type SGX38.0H21-IC2

VSWR

VSWR system	:	≤ 1.30

Dimensions and weight

Dimensions (incl. lightning arresters)	:	6369 x Φ 1050 x 2233 mm
Weight (including oil)	:	Approx. 706 kg

Environmental

Maximum wind speed operational	:	150 km/h
Maximum wind speed survival	:	240 km/h
Temperature range	:	-40° to +45°C
Relative humidity	:	100% (non-condensing)
Degree of protection	:	IP 55

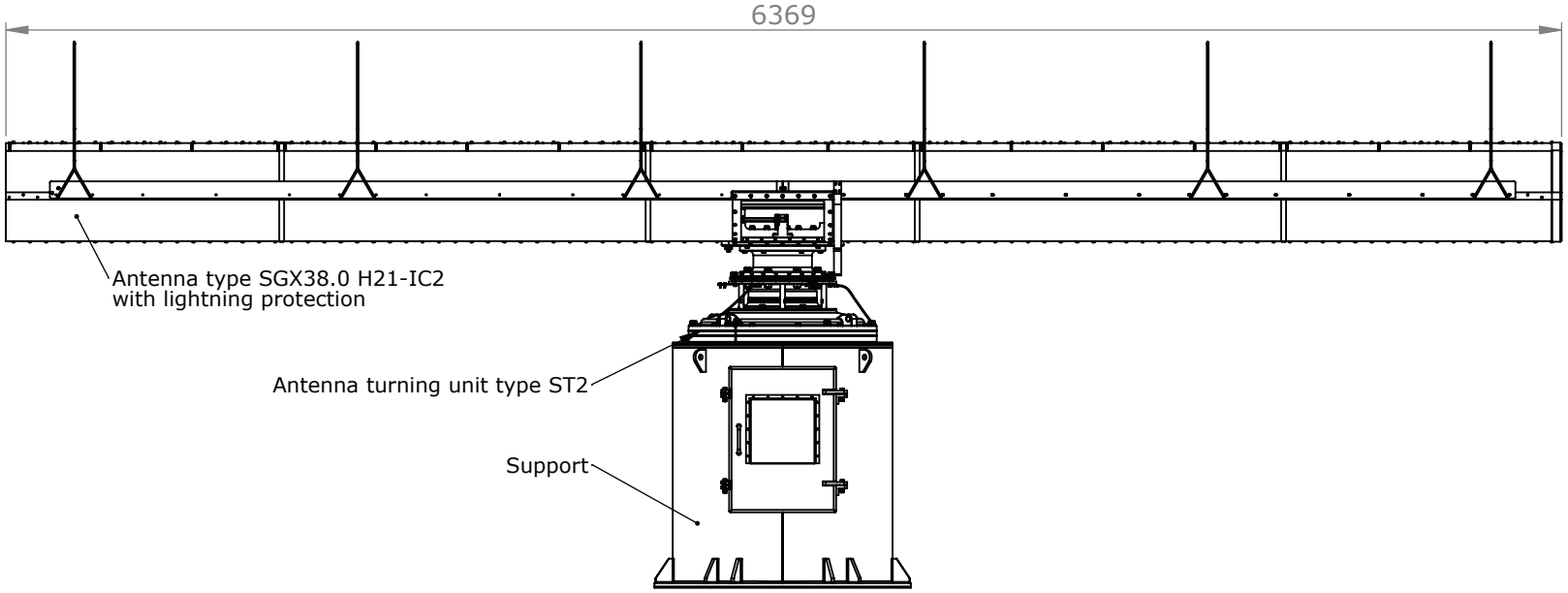

REAR VIEW

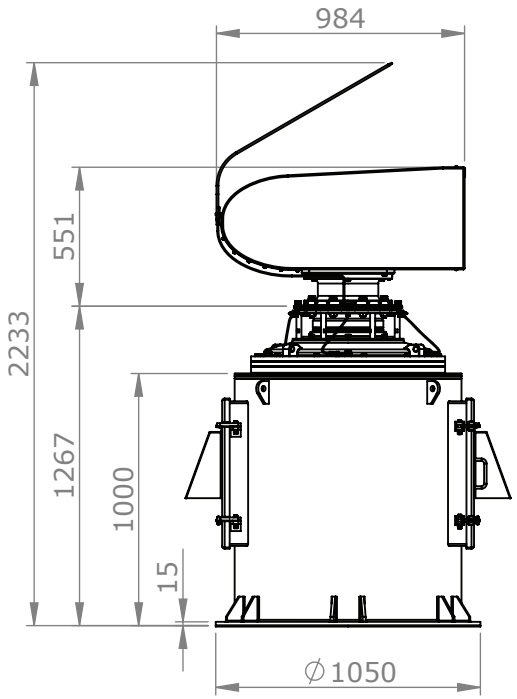

SIDE VIEW

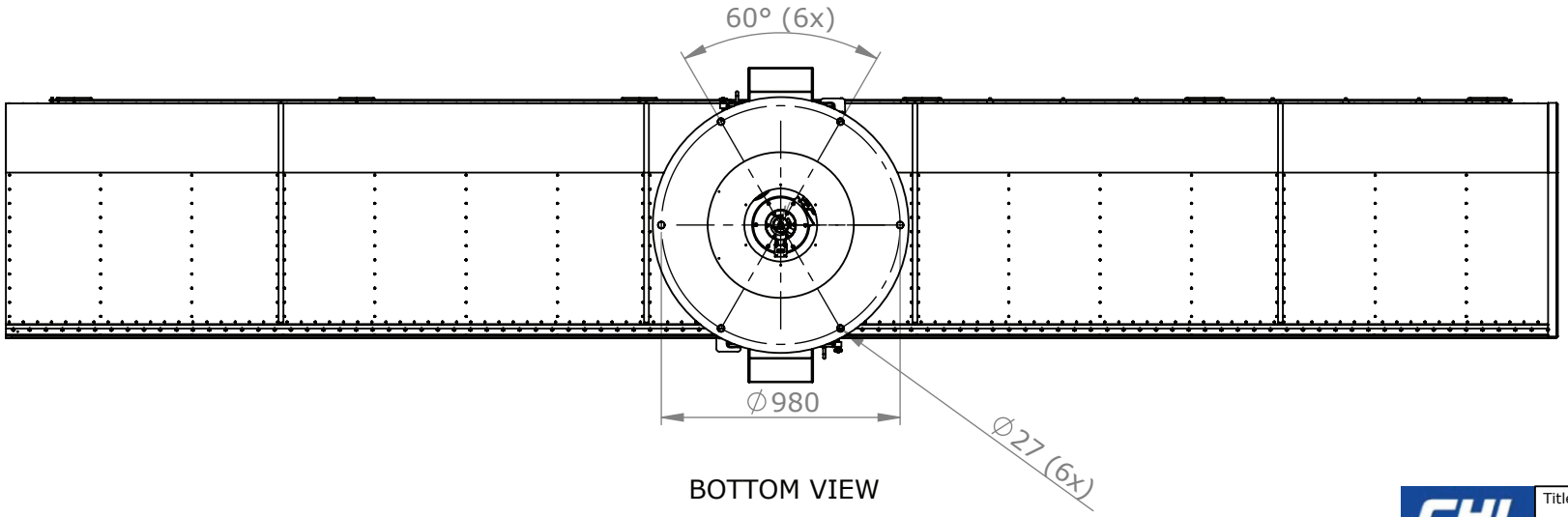

BOTTOM VIEW

Title:
Outline radar antenna system type SGX38.0H21-IC2

CHL NETHERLANDS B.V.
Katwijk-The Netherlands

Issue:	a
Issue date:	6-8-2010
Sheet:	1 of 1
Drawing number:	C2010016-1

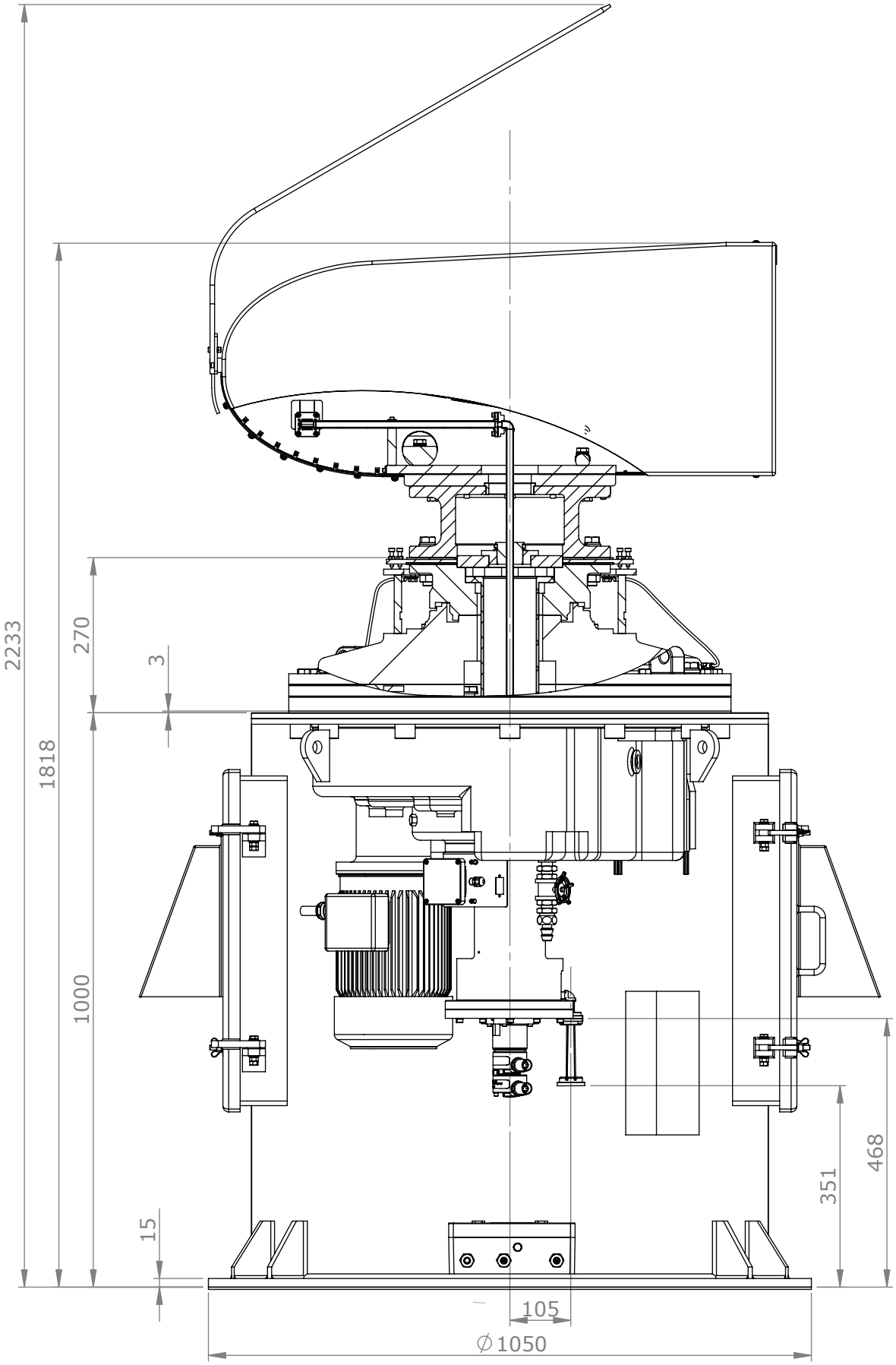

CHL	Title: Cross section radar antenna system type SGX38.0H21-IC2	
	CHL NETHERLANDS B.V. Katwijk-The Netherlands	Issue: a
		Issue date: 6-8-2010
		Sheet: 1 of 1
	This drawing is property of CHL NETHERLANDS B.V. Reproduction or disclosure to third parties of this document is not permitted without authorization of CHL NETHERLANDS B.V.	Drawing number: C2010016-2

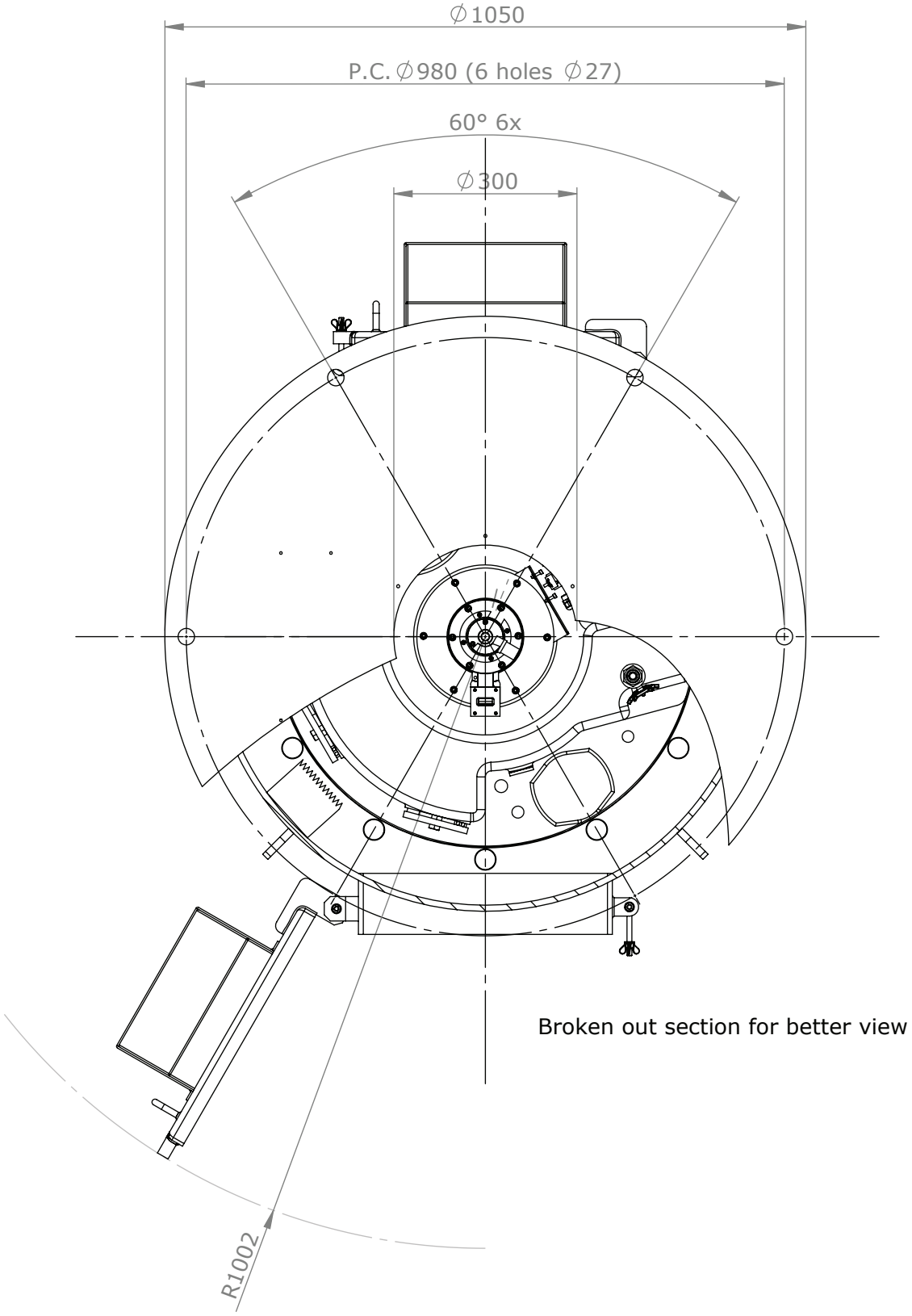

Broken out section for better view

CHL	Title: Bottom view ATU type ST2 on support	
	CHL NETHERLANDS B.V. Katwijk-The Netherlands	Issue: a
		Issue date: 6-8-2010
		Sheet: 1 of 1
	This drawing is property of CHL NETHERLANDS B.V. Reproduction or disclosure to third parties of this document is not permitted without authorization of CHL NETHERLANDS B.V.	Drawing number: C2010016-3

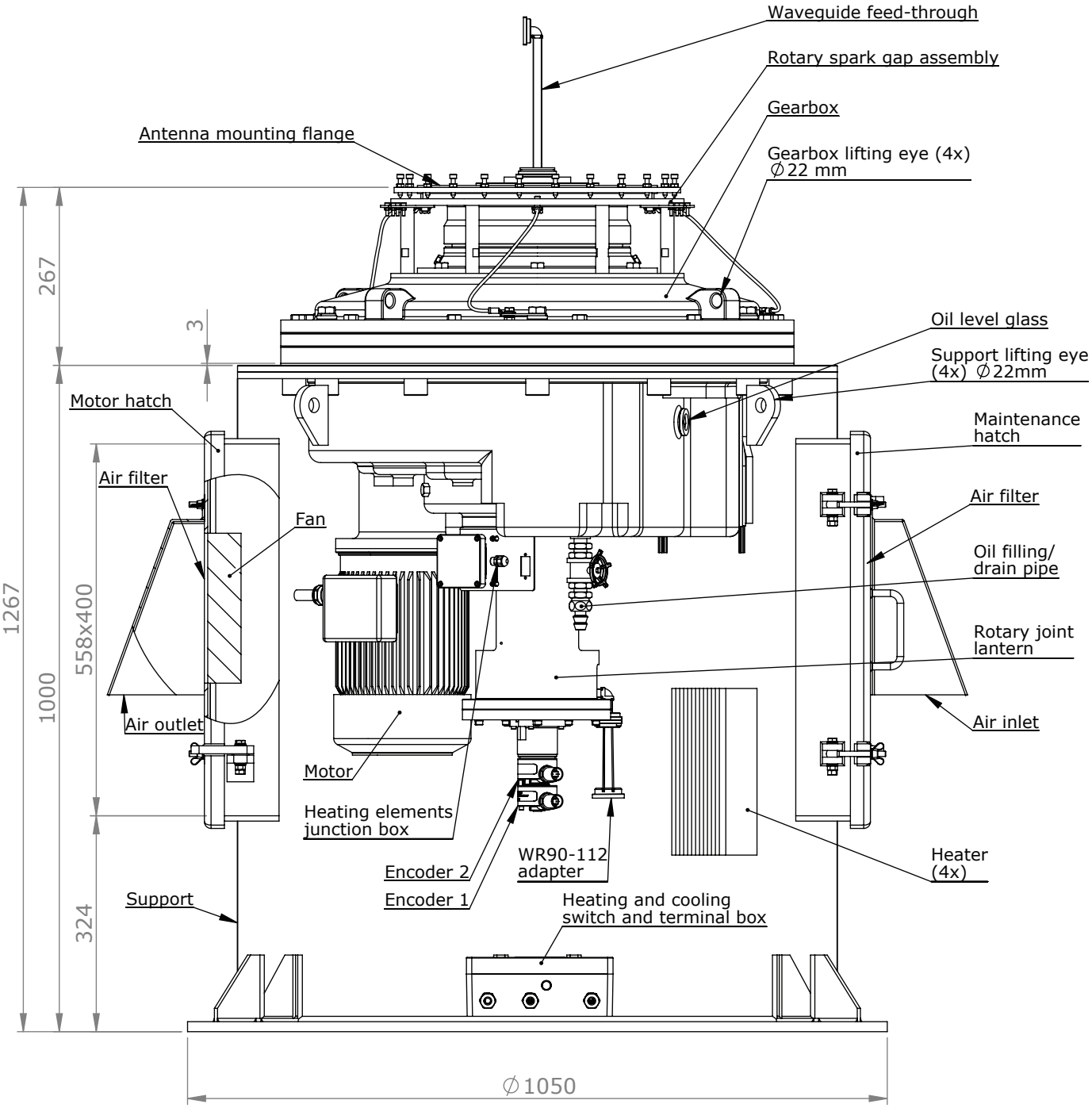

CHL	Title: Cross section ATU type ST2 on support	
CHL NETHERLANDS B.V. Katwijk-The Netherlands	Issue: a	
	Issue date: 6-8-2010	
	Sheet: 1 of 1	
	Drawing number: C2010016-4	

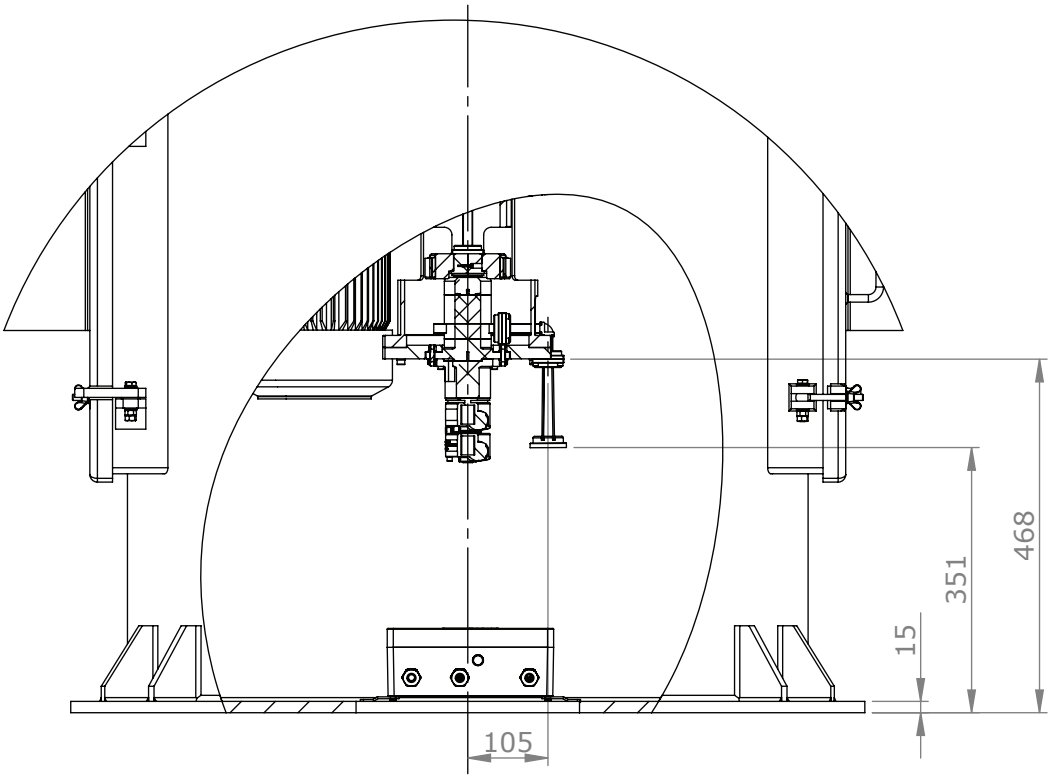

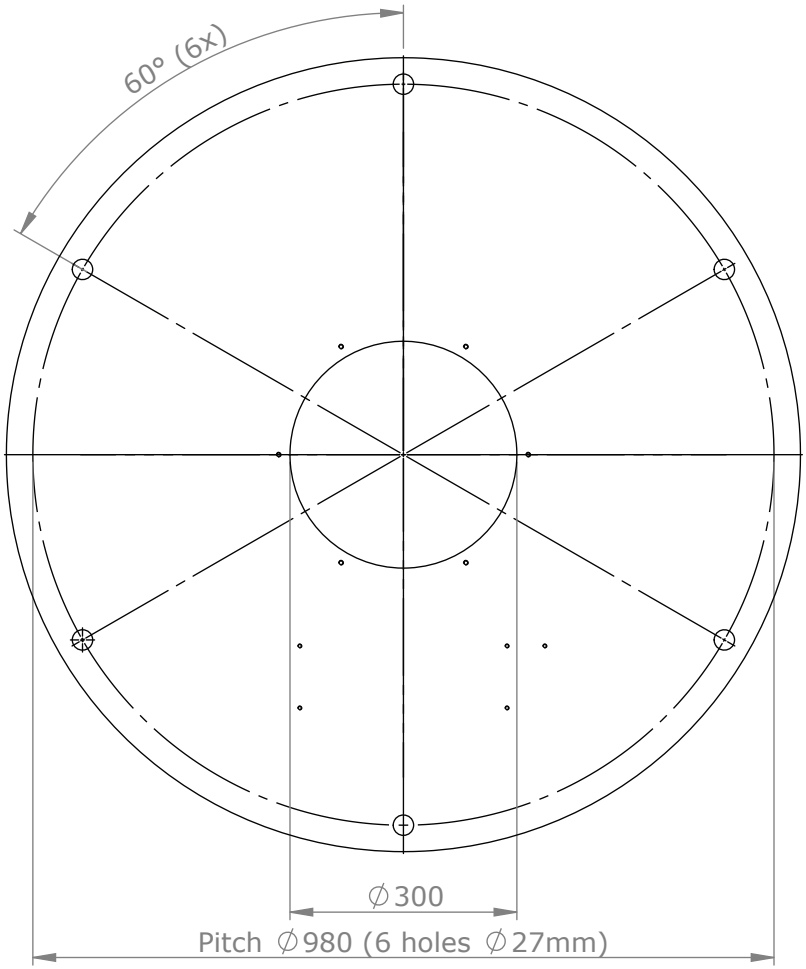

CHL	Title: Hole or threaded ends pattern for mounting support	
	CHL NETHERLANDS B.V. Katwijk-The Netherlands	Issue: a Issue date: 6-8-2010 Sheet: 1 of 1
		Drawing number: C2010016-12