Public Works and Government Services Canada | Travaux publics et Services gouvernementaux Canada

RETURN BIDS TO:
RETOURNER LES SOUMISSIONS À:

Public Works and Government Services Canada
Canada Place/Place du Canada
10th Floor/10e étage
9700 Jasper Ave/9700 ave Jasper
Edmonton
Alberta
T5J 4C3
Bid Fax: (780) 497-3510

SOLICITATION AMENDMENT
MODIFICATION DE L'INVITATION

The referenced document is hereby revised; unless otherwise indicated, all other terms and conditions of the Solicitation remain the same.

Ce document est par la présente révisé; sauf indication contraire, les modalités de l'invitation demeurent les mêmes.

Comments - Commentaires

Vendor/Firm Name and Address
Raison sociale et adresse du fournisseur/de l'entrepreneur

Issuing Office - Bureau de distribution

Public Works and Government Services Canada
Canada Place / Place du Canada
10th Floor /10e étage
9700 Jasper Ave / 9700 ave Jasper
Edmonton
Alberta
T5J 4C3

Title - Sujet HVAC Upgrade Services	
Solicitation No. - N° de l'invitation EP922-210258/A	**Amendment No. - N° modif.** 004
Client Reference No. - N° de référence du client CFIA EP922-210258	**Date** 2020-08-30
GETS Reference No. - N° de référence de SEAG PW-$PWU-183-11872	
File No. - N° de dossier PWU-0-43037 (183)	**CCC No./N° CCC - FMS No./N° VME**
Solicitation Closes - L'invitation prend fin **at - à** 02:00 PM **on - le** 2020-09-08	**Time Zone** **Fuseau horaire** Mountain Daylight Saving Time MDT
F.O.B. - F.A.B. **Plant-Usine:** ☐ **Destination:** ☐ **Other-Autre:** ☐	
Address Enquiries to: - Adresser toutes questions à: Tikhonovitch (RPC), Alex	**Buyer Id - Id de l'acheteur** pwu183
Telephone No. - N° de téléphone (780) 901-7940 ( )	**FAX No. - N° de FAX** (780) 497-3510
Destination - of Goods, Services, and Construction: **Destination - des biens, services et construction:**	

Instructions: See Herein

Instructions: Voir aux présentes

Delivery Required - Livraison exigée	**Delivery Offered - Livraison proposée**
Vendor/Firm Name and Address **Raison sociale et adresse du fournisseur/de l'entrepreneur** **Telephone No. - N° de téléphone** **Facsimile No. - N° de télécopieur**	
Name and title of person authorized to sign on behalf of Vendor/Firm (type or print) **Nom et titre de la personne autorisée à signer au nom du fournisseur/ de l'entrepreneur (taper ou écrire en caractères d'imprimerie)** **Signature**	**Date**

Canada

Stantec

Addendum

Stantec Consulting Ltd.
200-325 25 Street SE, Calgary AB T2A 7H8

File:	115303307 Lethbridge Lab AHU Replacement
Addendum No:	ADD-M02
Date:	August 27, 2020
Owner:	Canadian Food Inspection Agency, Public Services and Procurement Canada / Government of Canada

This addendum is to be read with and constitutes part of the tender document.

Instructions:

1. Amend your copy of the tender/quotation/proposal in accordance with the detail below
2. Retain one (1) copy for your file; sign and return a 2nd copy and attach to your submission as confirmation that the Addendum was taken into account in your bid submission.
3. Failure to sign and return this form may result in a non-compliant bid.

Details of the Addendum:

1. SPECIFICATIONS

.1 Section 23 25 19 – Steam System Cleaning and Chemical Treatment added

2. DRAWINGS

.1 M404 – MECHANICAL SCHEMATICS HEATING GLYCOL

i. Added pipe sizes for SF-15, SF-16, and SF-17. Glycol piping serving SF-15 and SF-16 to be 100Ø. SF-17 to be 50Ø.

ii. Revised pump tags serving SF-15, SF-16, and SF-17 to match schedules.

.2 M500 – MECHANICAL DETAILS

i. Added all-in-one chemical treatment system to steam humidification schematic including chemical pump, chemical feed tank, water meter, and control panel.

ii. Added breeching thru roof detail.

Reference: Reference

.3 M601 – MECHANICAL SCHEDULES

i. Added all-in-one chemical treatment system requirement to Reverse Osmosis schedule. “PROVIDE ALL IN ONE CHEMICAL FEED SYSTEM SUITABLE FOR HUMIDIFICATION SYSTEM C/W CHEMICAL FEED TANK, CHEMICAL PUMP, WATER METER, AND CONTROL PANEL. REFER TO SCHEMATIC M500.”

Stantec Consulting Ltd.

Attachment: Spec Section 23 25 19, M404, M500, M601

Part 1 General

1.1 SCOPE

.1 Provide for cleaning and degreasing of steam and condensate systems.

.2 Provide all necessary equipment and chemicals to treat steam and condensate systems.

.3 Isolate and bypass equipment listed in Clause 3.1.

1.2 ACCEPTABLE AGENCY

.1 Chemical treatment agency shall provide equipment, chemicals and site supervision so as to fully comply with all requirements and their intent contained within this specification section.

.2 Acceptable Agency: Keytech Water Management, SAI Engineering, Guardian Chemicals Inc., Specified Technical Sales Ltd.

1.3 QUALITY ASSURANCE

.1 Perform the cleaning and degreasing operation on site in conjunction with the mechanical contractor and submit written reports on all situations found, actions taken and final results. Reports shall be signed by the contractor, chemical treatment agency, and commissioning agency. Inform the engineer and commissioning agency 15 working days prior to commencing of work.

.2 Provide chemical treatment as specified herein and provide written reports. Reports shall be signed by the chemical treatment agency, mechanical contractor and commissioning agency.

.3 Chemical treatment agency shall provide directive and assistance to the mechanical contractor in the degreasing, cleaning and chemical treatment of all piping systems. Use of the permanent mechanical systems for pumping or heating of cleaning and dilution solutions is not permitted. Permanent systems shall be isolated and portable pumps and boilers utilized for the duration of the cleaning process. Permanent equipment shall be flushed, degreased and chemically treated independent of the piping systems.

.4 Include for the costs of an independent testing agency, selected by the Owner, to take samples of all chemically treated hydronic systems, perform lab analysis of the chemical treatment levels, and submit a written report of their findings to the Owner. Should chemical treatment levels not meet the requirements of the specifications, the Contractor shall adjust treatment levels accordingly and cover the costs of the independent testing agency to take additional samples and tests.

1.4 SUBMITTALS

.1 Submit shop drawings with complete description of proposed chemicals, quantities, calculations, procedures, test kits and equipment to be supplied. Along with product shop drawings, provide copies of data sheets, procedure instructions and analysis reports to be used on this project. Shop drawings shall be submitted within 10 workings days of the award of contract.

[A] – Issued in Addendum ADD-M02

.2 Provide written reports containing procedure of system cleaning and degreasing, giving times, dates, conditions of water and problems and actions encountered.

.3 Submit written reports to the mechanical contractor and engineer containing results of tests taken seven days after completion of chemical treatment. [Reports shall be done every seven days for a minimum time period of 35 days.]

.4 Provide monthly site visits (12 minimum) within the warranty year to check the treatment, take samples, analyze and recommend proper addition of treatment. Provide written reports to the owner after each visit with a copy to the engineer.

Part 2 Products

2.1 MATERIALS

.1 Provide sufficient chemicals to treat and test the systems from the time of activation and acceptance of the building for the first year of operation by the owner.

.2 Materials which may contact finished areas shall be colorless and non-staining. Chemicals used must comply with environmental and health standards applicable to the usage on this project.

.3 System Cleaner: Alkaline compound which in solution removes grease and petroleum products.

.4 Steam System Treatment: Provide an oxygen scavenging agent, corrosion inhibitor, alkalinity control compound, sequestering agent to reduce hardness, and carbon dioxide neutralizer. Chemicals used in steam humidification boilers must be non toxic and must not boil-off with steam.

2.2 EQUIPMENT

.1 Solution Pumps: Provide positive displacement diaphragm type metering pumps for adding chemicals. Pumps shall have an adjustable flow rate and be suitable for chemicals to be pumped. Pumps shall be self flushing. Provide pumps with plastic solution tanks complete with agitator, pump mounting, cover, provision for fill line and pump strainer. Size the pumps and tanks to permit operation for three days at 50% pump capacity without refill of tanks. Provide agitator motor with terminals and junction box for electric wiring.

.2 Provide a contact water meter sized to suit makeup water requirement at full load.

.3 The system shall be capable of providing make-up water consumption record.

.4 The system shall be capable of feeding chemical after the blowdown is complete.

.5 Provide chemical feed tank.

.6 Steam Boiler

.1 Provide complete automatic blowdown consisting of two-position solenoid valve and conductivity metering device. Blowdown is to be provided with a parallel manual blowdown. Blowdown is to take place when the conductivity level of boiler water increases above the set point. HyDac Model 300.

[A] – Issued in Addendum ADD-M02

.2 Chemical feed pump, solution tank and mixer.

.3 Flow switch on make up line to control chemical feed pump.

2.3 CHEMICALS

.1 Provide necessary Magcare 321 boil out chemical.

.2 Provide 100 liters of Magnus BT647A (suitable for humidification systems)

2.4 TEST KITS

.1 Test methods shall be titration type utilizing automatic burettes capable of determining 0.1 ppm, where this type of method may be used.

.2 All test kits shall be provided with adequate chemicals and reagents for one year of testing.

.3 Provide test kits as required to determine proper system treatment consisting of but not limited to the following:

.1 Steam boiler water treatment test kit to determine proper treatment and blowdown.

.4 Provide test kits for hardness and chlorides in addition to those listed above.

.5 Provide a PH meter complete with three different calibration standard solutions.

Part 3 Execution

3.1 SYSTEM CLEANING

.1 Ensure reasonable care is exercised to prevent debris, dirt and other foreign material from entering the pipe during construction. This is to include proper protection of piping on site prior to installation, temporary caps on partial systems, and complete evacuation of moisture within systems being hydrostatically pressure tested.

.2 Chemical treatment agency shall, in conjunction with the mechanical contractor, review connections for complete draining and venting of the systems. The mechanical contractor shall provide adequate drain connections to completely drain the systems within one hour. Utilize water meter to record capacity within each system.

.3 Protect and/or remove control devices from systems during cleaning. All terminal control valves shall be in open position during cleaning. Particular attention is to be made to control valves which have a normally closed position. Isolate and bypass the following equipment during flushing and chemical treating: Plate and frame heat exchangers.

.4 Make systems completely operational, totally filled, thoroughly vented, and completely started.

.5 Add system cleaner and degreasant to flow systems at concentration of 1 kg (2.2 lbs) per 1000 L (265 gal) of water contained in systems for hot systems, 1 kg (2.2 lbs) per 500 L (135 gal) of water for cold systems, and fill the boilers only with cleaner for steam systems.

[A] – Issued in Addendum ADD-M02

.6 For steam systems apply heat and raise boiler temperature to 71°C (160°F) for a minimum of 12 hours. Cool and drain as quickly as possible. Refill with clean water, drain, refill and test and check for sludge. Apply heat to produce steam for piping system. Maintain for 8 hours minimum. Bypass traps and waste all condensate to drain.

.7 Inspect, clean of sludge and flush all low points with clean water after cleaning and degreasing process is completed. Include disassembly of components as required. All cleaning and flushing of low points, coils, boilers, etc., shall be done prior to final fill and chemical treatment.

3.2 STEAM SYSTEM

.1 Provide solution pump and solution tank to feed sequestering agent and oxygen recovery base, and corrosion inhibitor into domestic make-up line. Provide minimum of one pump per make-up line where treatment materials can be mixed. Provide one pump and solution tank per material where materials cannot be premixed. Provide agitator for each tank.

.2 Control solution pumps and feed from flow switch in make-up water line. Activate solution pumps when flow switch senses flow in make-up water line.

END OF SECTION

[A] – Issued in Addendum ADD-M02

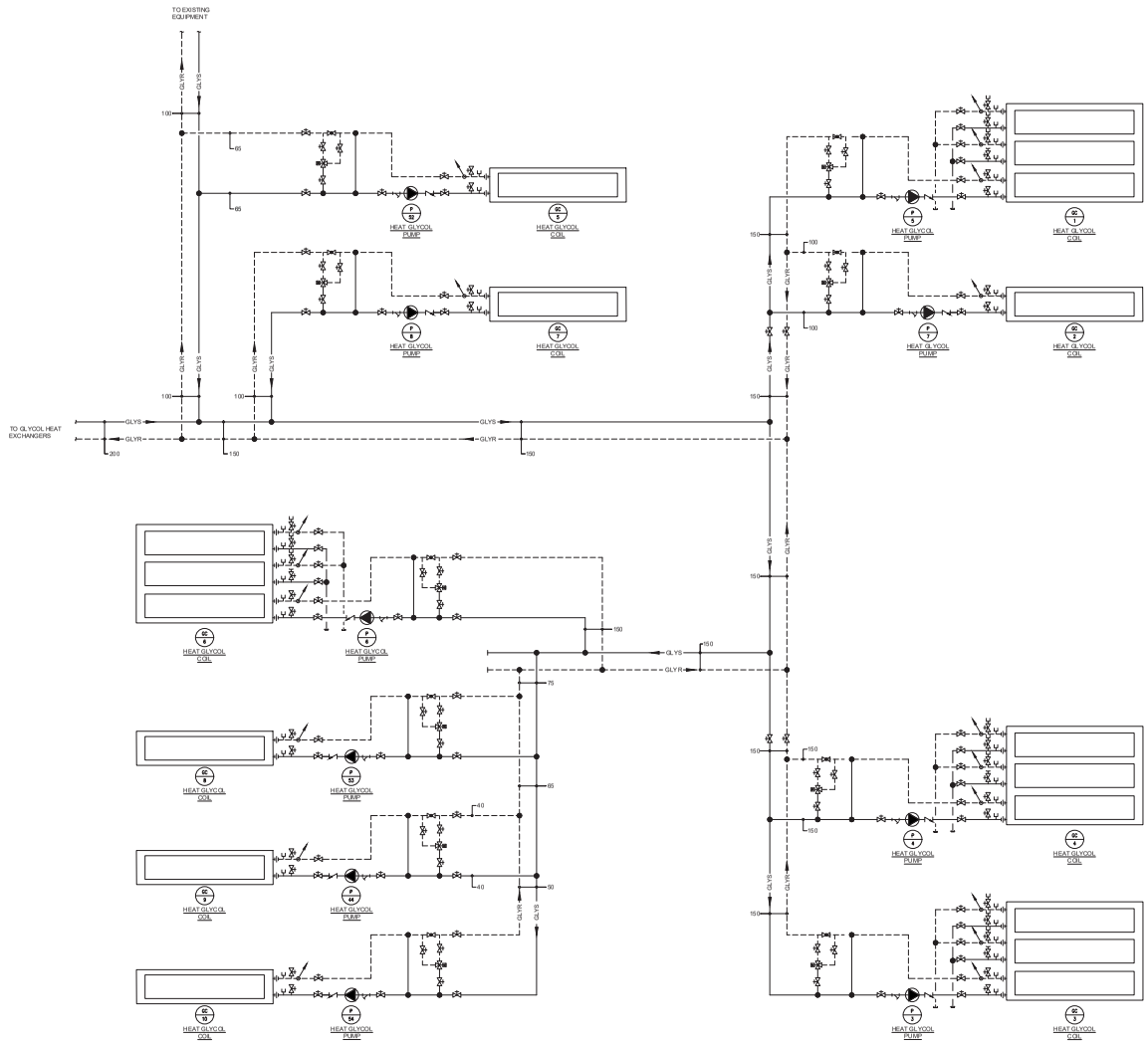

1 M404 **SF-1, 2, 3, 4, 5, 6, 7 AND 8 HEATING GLYCOL PIPING SCHEMATIC**
N.T.S.

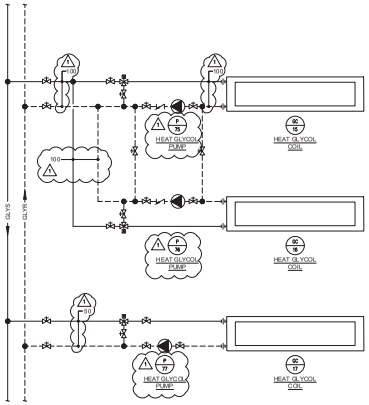

2 M404 **SF-15, 16 AND 17 HEATING GLYCOL PIPING SCHEMATIC**
N.T.S.

Public Works and Government Services Canada / Travaux publics et Services gouvernementaux Canada

REAL PROPERTY SERVICES
Western Region
SERVICES IMMOBILIERS
Région de l'ouest

Stantec

Revision	Description	Date
5		
4		
3		
2		
1	ASB-R02	2025/08/27
0	ISSUED FOR TENDER	2025/07/07

Client / client: **Public Services and Procurement Canada**

Project / Projet: LETHBRIDGE, AB
TOWNSHIP ROAD 9-1, T1J 3Z4

NATIONAL CENTRE FOR ANIMAL DISEASES AHU REPLACEMENT

Designed by / Conçu par: JC
Drawn by / Dessiné par: EJ
Approved by / Approuvé par: MB
PWGSC Project Manager / Administrateur de Projets TPSGC

Drawing title / Titre du dessin: **MECHANICAL SCHEMATICS HEATING GLYCOL**

Project no./No. du projet	Drawing no./No. du dessin	Revision no.
	M404 22 OF 27	1

PWGSC – AO – 11B00841

M404

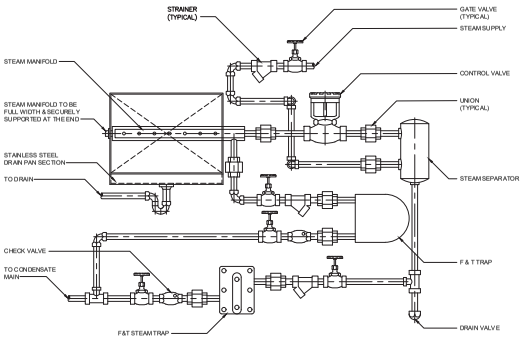

1 M500 **DUCT HUMIDIFIER DETAIL**
N.T.S.

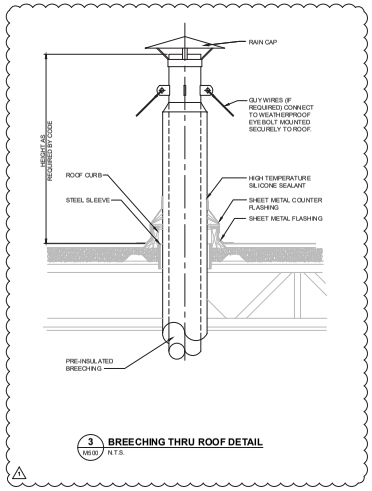

3 M500 **BREECHING THRU ROOF DETAIL**
N.T.S.

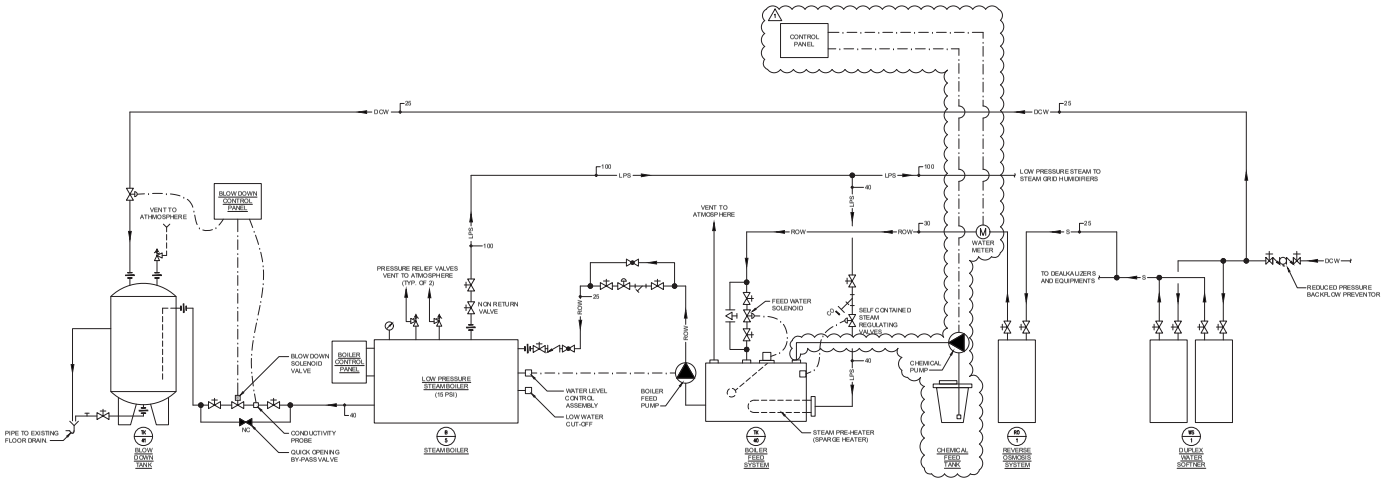

2 M500 **STEAM HUMIDIFICATION SCHEMATIC**
N.T.S.

Public Works and Government Services Canada / Travaux publics et Services gouvernementaux Canada

REAL PROPERTY SERVICES
Western Region
SERVICES IMMOBILIERS
Région de l'ouest

Stantec

Revision	Description	Date
5		
4		
3		
2		
1	ASB-R02	2025.08.27
0	ISSUED FOR TENDER	2025.07.07

Client / client
Public Services and Procurement Canada

Project / Projet
LETHBRIDGE, AB
TOWNSHIP ROAD 9-1, T1J 3Z4

NATIONAL CENTRE FOR ANIMAL DISEASES AHU REPLACEMENT

Designed by / Conçu par: JC
Drawn by / Dessiné par: EJ
Approved by / Approuvé par: MB
PWGSC Project Manager / Administrateur de Projets TPSGC

Drawing title / Titre du dessin
MECHANICAL DETAILS

Project no./No. du projet	Drawing no./No. du dessin	Revision no.
	M500 24 OF 27	1

PWGSC – AO – 11B00041

M500

BOILER SCHEDULE

TAG No.	SERVICE	TYPE	FUEL	INPUT (kW)	STEAM OUTPUT (kg/hr)	STEAM SUPPLY NOZZLE (kPa)	WIDTH (mm)	LENGTH (mm)	HEIGHT (mm)	REMARKS
B-5	STEAM HUMIDIFICATION	FLEXIBLE WATER TUBE	NATURAL GAS	13.19	16.84	103	1397	3.893	2.661	C/W NATURAL GAS LOW NOS BURNER; STAINLESS STEEL CHEMICAL FEED QUILL; INSULATED TANK JACKET.

REVERSE OSMOSIS SCHEDULE

TAG No.	MAXIMUM PRODUCTION (L/day)	RECOVERY (%)	NUMBER OF MEMBRANES	ELECTRICAL		REMARKS
				PUMP (kW)	V/Ph/Hz	
RO-1	4542.5	75	6	2.2	208/1/60	PROVIDE ALL IN ONE CHEMICAL FEED SYSTEM SUITABLE FOR HUMIDIFICATION SYSTEM C/W CHEMICAL FEED TANK, CHEMICAL PUMP, WATER METER, AND CONTROL PANEL. REFER TO SCHEMATIC M600.

TANK SCHEDULE

TAG No.	SERVICE	FLUID	WORKING PRESSURE (kPa)	MAX PRESSURE (kPa)	DIAMETER (MM)	TANK HEIGHT (MM)	STAND HEIGHT (MM)	REMARKS
TK-41	BOILER BLOWDOWN SEPARATOR	WATER	10.3	27.6	406	762	762	C/W STAND AND AFTERCOOLER.

BOILER FEED SYSTEM SCHEDULE

TAG No.	SERVICE	FLUID	CAPACITY (L)	MAX PRESSURE (kPa)	LENGTH (MM)	WIDTH (MM)	HEIGHT (MM)	REMARKS
BFS-1	BOILER B-5 FEED WATER	WATER	492	27.6	870	1220	1750	C/W BOILER FEED PUMP (BOILER FEED PUMP P-100); STEAM PREHEATER.

GRILLE SCHEDULE

TAG No.	MANUFACTURE	MODEL	DESCRIPTION
S-1	E.H. PRICE	620	E.H. PRICE MODEL LOUVER FACED GRILLE TO BE SUITABLE FOR SURFACE MOUNTING. REGISTER SHALL BE DOUBLE DEFLECTION TYPE WITH ADJUSTABLE BLADES AND 3/4 INCH SPACING. REFER TO DRAWINGS FOR SIZES AND CAPACITIES.

MOTORIZED DAMPER

TAG No.	DUCT SIZE (mm)	PRESSURE DROP (Pa)	FACE VELOCITY (m/s)	REMARKS
MD-1	1400	49.70	12.77	HEAVY DUTY AIRFOIL CONTROL DAMPER.
MD-2	1270	109	19.37	HEAVY DUTY AIRFOIL CONTROL DAMPER.
MD-3	1270	69.67	19.37	HEAVY DUTY AIRFOIL CONTROL DAMPER.
MD-4	1400	69.67	15.44	HEAVY DUTY AIRFOIL CONTROL DAMPER.
MD-5	1000	14.9	6.99	HEAVY DUTY AIRFOIL CONTROL DAMPER.
MD-6	900x900	17.4	6.99	HEAVY DUTY AIRFOIL CONTROL DAMPER.
MD-7	1500	50.0	11.66	HEAVY DUTY AIRFOIL CONTROL DAMPER.
MD-8	1400x1400	25.0	13.45	HEAVY DUTY AIRFOIL CONTROL DAMPER.
MD-9	1500	34.8	11.12	HEAVY DUTY AIRFOIL CONTROL DAMPER.
MD-10	1400	49.768	12.77	HEAVY DUTY AIRFOIL CONTROL DAMPER.
MD-11	1400	59.7	12.77	HEAVY DUTY AIRFOIL CONTROL DAMPER.

Public Works and Government Services Canada / Travaux publics et Services gouvernementaux Canada

REAL PROPERTY SERVICES
Western Region
SERVICES IMMOBILIERS
Région de l'ouest

Stantec

Revision	Description	Date
5		
4		
3		
2		
1	ASB-R02	2025.08.27
0	ISSUED FOR TENDER	2025.07.07

Client / client
Public Services and Procurement Canada

Project / Projet
LETHBRIDGE, AB
TOWNSHIP ROAD 9-1, T1J 3Z4

NATIONAL CENTRE FOR ANIMAL DISEASES AHU REPLACEMENT

Designed by / Conçu par: JC
Drawn by / Dessiné par: EJ
Approved by / Approuvé par: MB
PWGSC Project Manager / Administrateur de Projets TPSGC

Drawing title / Titre du dessin
MECHANICAL SCHEDULES

Project no./No. du projet	Drawing no./No. du dessin	Revision no.
	M601 27 OF 27	1

PWGSC – AO – 11800841

0 10 20 30 40 50 60 70 80 90 100mm

M601