**Attachment 003**

# Addendum No. 1

Date: September 2, 2020
Addendum No.: 01
Project No.: R.21850.003
Henry Traill Community Correctional Centre, Kingston Ontario

The following changes in the bid documents are effective immediately.

This addendum will form part of the construction documents.

**SPECIFICATIONS:**

1. As an Appendix to the Specifications, ADD the following document (attached herein):
   *Revised Hazardous Building Materials Assessment: Exterior Façade Replacement Henry Traill Correctional Centre (HTCC) by Pinchin, dated Aug 24, 2020 (48 pages)*

**DRAWINGS:**

1. ADD SK-1 Addendum 1 prepared by Taylor Hazell Architects, dated 2020-09-01 (attached) (1 page)

-end.

REVISED

# Hazardous Building Materials Assessment

Exterior Façade Replacement
Henry Trail Correctional Centre (HTCC)
1453 Bath Road, Kingston, Ontario

Prepared for:

Public Services and Procurement Canada
294 King Street East
Kingston, Ontario K7L 3B2

August 24, 2020

Pinchin File: 272921

| | |
|---|---|
| **Issued to:** | **Public Services and Procurement Canada** |
| **Issued on:** | **August 24, 2020** |
| **Pinchin File:** | **272921** |
| **Issuing Office:** | **Kingston, ON** |

Author:

Halie MacKillican
Project Technologist
613.541.1013 ext. 1616
hmackillican@pinchin.com

Reviewer:

Sarah Young, C.Tech.
Operations Manager
613.541.1013 ext. 1609
syoung@pinchin.com

## EXECUTIVE SUMMARY

Public Services and Procurement Canada (Client) retained Pinchin Ltd. (Pinchin) to conduct a hazardous building materials assessment at the Henry Trail Correctional Centre (HTCC) located at 1453 Bath Road, Kingston, Ontario. Pinchin performed the assessment on March 11, 2020.

The objective of the assessment was to identify specified hazardous building materials in preparation for exterior building renovation.

The proposed renovations include the replacement of the exterior façade on three wings of the building, as identified by the Client and the drawings entitled "*Exterior Façade Replacement, Henry Trail Correctional Centre, Kingston, ON*", prepared by WSP issued for 100% review dated January 31, 2020.

## SUMMARY OF FINDINGS

Asbestos: Asbestos-containing materials (ACM) were not found in the assessed area.

Lead: Lead is present as follows:

- Beige paint, containing elevated concentrations of lead, is present on prefabricated concrete panels present as exterior cladding, in good condition.

Silica: Crystalline silica is present in concrete, mortar and masonry.

Mercury: Mercury-containing items were not found in the assessed area.

Polychlorinated Biphenyls (PCBs): PCB-containing items were not found in the assessed area.

Mould and Water Damage: Visible mould growth and water damage was not observed.

## SUMMARY OF RECOMMENDATIONS

The following is a summary of significant recommendations; refer to the body of the report for detailed recommendations:

1. Conduct further investigation of the following items, which could not be completed during this assessment due to limitations on scope, occupancy, or being in service at the time of the assessment:
    a. Any materials listed as exclusions in this report, prior to disturbance.
2. Do not disturb suspected hazardous building materials discovered during the planned work, which have not been identified in this report and arrange for further evaluation and testing.
3. Follow appropriate safe work procedures when handling or disturbing silica and lead.

*This Executive Summary is subject to the same standard limitations as contained in the report and must be read in conjunction with the entire report.*

## TABLE OF CONTENTS



## APPENDICES

## 1.0 INTRODUCTION AND SCOPE

Public Services and Procurement Canada (Client) retained Pinchin Ltd. (Pinchin) to conduct a hazardous building materials assessment at the Henry Trail Community Centre (HTCC) located at 1453 Bath Road, Kingston, Ontario.

Pinchin performed the assessment on March 11, 2020. The surveyors were accompanied by a member of Public Services and Procurement Canada during the assessment. The assessed area was occupied at the time of the assessment.

The objective of the assessment was to identify specified hazardous building materials in preparation for exterior building renovation.

The proposed renovations as identified by the Client include; the replacement of the exterior façade on three wings of the building, as identified by the Client and the drawings entitled "*Exterior Façade Replacement, Henry Trail Correctional Centre, Kingston, ON*", prepared by WSP, issued for 100% review dated January 31, 2020.

### 1.1 Scope of Assessment

The assessment was performed to establish the location and type of specified hazardous building materials incorporated in the structure(s) and its finishes. This assessment is intended to be used for renovation purposes only, and may not provide sufficient detail for long term management of hazardous materials as required by Health and Safety regulations.

The assessed area was limited to the exterior of three wings of the building, excluding the roof and windows.

The extent of the assessed area was defined by the Client and is shown on the appended drawings.

For the purpose of the assessment and this report, hazardous building materials are defined as follows:

- Asbestos.
- Lead.
- Silica.
- Mercury.
- Polychlorinated Biphenyls (PCBs).
- Mould.

The following Designated Substances are not typically found in building materials in a composition/state that is hazardous and were not included in this assessment:

- Arsenic.
- Acrylonitrile.
- Benzene.
- Coke oven emissions.
- Ethylene oxide.
- Isocyanates.
- Vinyl chloride monomer.

## 2.0 BACKGROUND INFORMATION

### 2.1 Building Description

| Description Item | Details |
|---|---|
| Use | Correctional centre |
| Number of Floors | Two storeys |
| Total Area | Approximately 31,000 square feet |
| Year of Construction | 2012 |
| Structure | Structural steel and concrete |
| Exterior Cladding | Brick and prefabricated concrete panels |
| HVAC | Not in scope |
| Roof | Sloped metal roof |
| Flooring | Not in scope |
| Interior Walls | Not in scope |
| Ceilings | Not in scope |

## 3.0 FINDINGS

The following section summarizes the findings of the assessment and provides a general description of the hazardous materials identified and their locations. For details on approximate quantities, assessment and locations of hazardous materials; refer to the Hazardous Material Summary Report and All Data Report in Appendix V and VI.

## 3.1 Asbestos

### *3.1.1 Pipe Insulation*

Pipes were not found in the assessed area.

### *3.1.2 Duct Insulation and Mastic*

Ducts were not found in the assessed area.

### *3.1.3 Mechanical Equipment Insulation*

Mechanical equipment was not found in the assessed area.

### *3.1.4 Sealants, Caulking, and Putty*

Grey caulking present as a sealant between prefabricated concrete panels on the exterior of the building does not contain asbestos (samples S0003A-C).

### *3.1.5 Other Building Materials*

The prefabricated concrete panels present as exterior cladding do not contain asbestos (samples S0001A-C).

The mastic on the backside of the prefabricated concrete panels present as exterior cladding does not contain asbestos (samples S0002A-C).

Non-asbestos prefabricated concrete panels.

Non-asbestos mastic present behind prefabricated concrete panels.

#### *3.1.6 Presumed Asbestos Materials*

The following is a list of materials which may contain asbestos, which were not observed and/or not sampled during the assessment; these materials are presumed to contain asbestos until otherwise proven by sampling and analysis:

- Roofing felts and tar, mastics.
- Vermiculite.
- Soffit and fascia boards.
- Materials concealed or outside of the assessed area.

## 3.2 Lead

#### *3.2.1 Paints and Surface Coatings*

The following table summarizes the analytical results for paints sampled that are considered elevated, i.e. above 0.009%:

| Sample Number | Colour, Substrate Description | Location | Lead (%) | TCLP Result (mg/L) |
|---|---|---|---|---|
| L0001 | Beige on prefabricated concrete panel | Exterior cladding | 0.0301 | <0.05 |

All paints determined to be lead-based were found to be in good condition and not flaking, peeling or delaminating.

Pinchin submitted sample L0001 for a Toxicity Characteristic Leaching Procedure (TCLP) analysis to determine proper waste streaming. The lead TCLP result was below the criteria of 5 mg/L as outlined in Schedule 4 of O.Reg. 347/00. The painted panels can be disposed of as regular construction waste.

#### *3.2.2 Lead Products and Applications*

Lead products were not found in the assessed area.

#### *3.2.3 Presumed Lead Materials*

Lead may be present in a number of materials which were not assessed and/or sampled. The following materials, where found, should be considered to contain lead.

- Electrical components, including wiring connectors, grounding conductors, and solder.

### 3.3 Silica

Crystalline silica is a presumed component of the following materials:

- Poured and pre-cast concrete.
- Masonry and mortar.

### 3.4 Mercury

Mercury-containing lamps and devices were not found in the assessed area.

### 3.5 Polychlorinated Biphenyls

#### *3.5.1 Caulking*

Grey caulking between the prefabricated concrete panels present as exterior cladding was not suspected to contain PCBs due to the date of installation (after 1985).

#### *3.5.2 Lighting Ballasts*

Fluorescent lights and ballasts were not found in the assessed area.

#### *3.5.3 Transformers*

Transformers were not found in the assessed area.

### 3.6 Mould

Visible mould growth and water damage was not found in the assessed area.

## 4.0 RECOMMENDATIONS

### 4.1 General

1. If suspected hazardous building materials are discovered during the planned work, which are not identified in this report, do not disturb and arrange for further testing and evaluation.
2. Conduct further investigation of the following items, which could not be completed during this assessment due to limitations on scope, occupancy, or being in service at the time of the assessment:

a. Any materials listed as exclusions in this report, prior to disturbance.

3. Provide this report to the contractor prior to bidding or commencing work.
4. Retain a qualified consultant to specify, inspect and verify the successful removal of hazardous materials.

## 4.2 Building Renovation Work

The following recommendations are made regarding renovation involving the hazardous materials identified.

### *4.2.1 Lead*

Construction disturbance of lead in paint and coatings (or other materials) may result in over-exposure to lead dust or fumes. The need for work procedures, engineering controls and personal protective equipment will need to be assessed on a project-by-project basis and must comply with provincial standards or guidelines.

### *4.2.2 Silica*

Construction disturbance of silica-containing products may result in excessive exposures to airborne silica, especially if performed indoors and dry. Cutting, grinding, drilling or demolition of materials containing silica should be completed only with proper respiratory protection and other worker safety precautions that comply with provincial standards or guidelines.

## 5.0 TERMS AND LIMITATIONS

This work was performed subject to the Terms and Limitations presented or referenced in the proposal for this project.

Information provided by Pinchin is intended for Client use only. Pinchin will not provide results or information to any party unless disclosure by Pinchin is required by law. Any use by a third party of reports or documents authored by Pinchin or any reliance by a third party on or decisions made by a third party based on the findings described in said documents, is the sole responsibility of such third parties. Pinchin accepts no responsibility for damages suffered by any third party as a result of decisions made or actions conducted. No other warranties are implied or expressed.

## 6.0 REFERENCES

The following legislation and documents were referenced in completing the assessment and this report:

1. Canada Occupational Health and Safety Regulation, SOR/86-304.
2. PCB Regulations, SOR/2008-273, Canadian Environmental Protection Act.
3. Surface Coating Materials Regulations, SOR/2005-109, Hazardous Products Act.
4. Consolidated Transportation of Dangerous Goods Regulations, including Amendment SOR/2019-101, Transportation of Dangerous Goods Act.

5. Mould Guidelines for the Canadian Construction Industry, Standard Construction Document CCA 82 – 2004 (Revised 2018), Canadian Construction Association.
6. Asbestos on Construction Projects and in Buildings and Repair Operations, Ontario Regulation 278/05.
7. Designated Substances, Ontario Regulation 490/09.
8. Lead on Construction Projects, Ministry of Labour Guidance Document.
9. The Environmental Abatement Council of Ontario (EACO) Lead Guideline for Construction, Renovation, Maintenance or Repair.
10. Ministry of the Environment Regulation, R.R.O. 1990 Reg. 347 as amended.
11. Silica on Construction Projects, Ministry of Labour Guidance Document.
12. Alert – Mould in Workplace Buildings, Ontario Ministry of Labour.

\\pinchin.com\kgn\Job\272000s\0272921.000 PublicWorks,1453BathRd,HAZ,DSR\Deliverables\272921 Rev DSR HTCC 1453BathRdKingstonON PublicService&ProcurementCanada.docx

Template: Master Report for Hazardous Materials Assessment (Pre-Construction), HAZ, February 26, 2020

# APPENDIX I

## Drawings

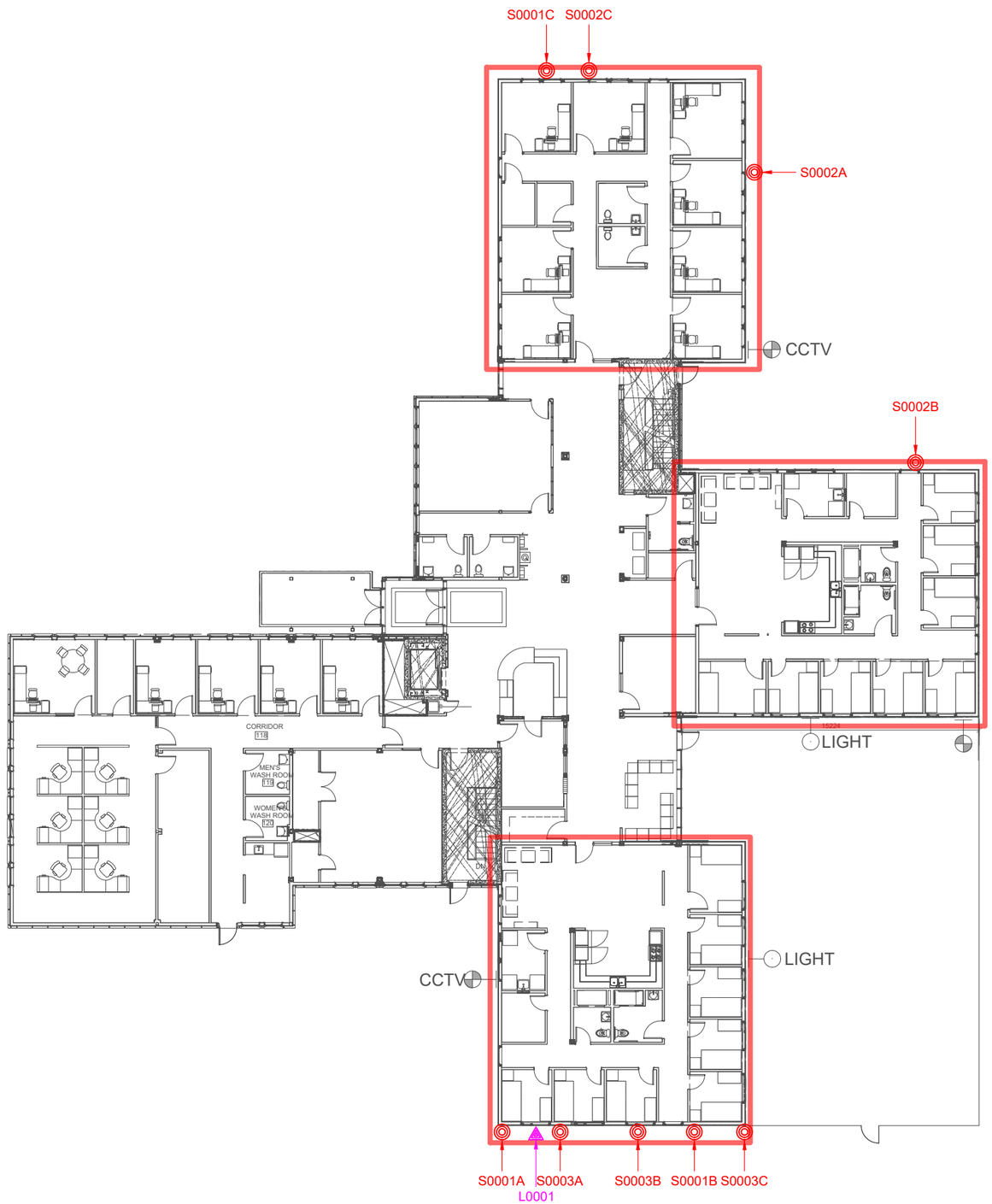


N

LEGEND

- ASBESTOS BULK SAMPLE
- LEAD BULK SAMPLE
- ASSESSED AREA (EXTERIOR OF BUILDING)

NOT ALL KNOWN OR SUSPECTED HAZARDOUS BUILDING MATERIALS MAY BE DEPICTED ON THE DRAWING. REFER TO THE HAZARDOUS BUILDING MATERIALS ASSESSMENT REPORT FOR A COMPLETE LIST OF KNOWN AND SUSPECTED HAZARDOUS BUILDING MATERIALS.

LEGEND IS COLOUR DEPENDENT. NON-COLOUR COPIES MAY ALTER INTERPRETATION.

BASE PLAN PROVIDED BY CLIENT.

PINCHIN

| | |
|---|---|
| PROJECT NAME: HAZARDOUS BUILDING MATERIALS ASSESSMENT | |
| CLIENT NAME: PUBLIC SERVICES AND PROCUREMENT CANADA | |
| PROJECT LOCATION: HTCC 1453 BATH ROAD KINGSTON, ONTARIO | |
| FIGURE NAME: MAIN FLOOR | |
| PROJECT NUMBER: 272921 | SCALE: NOT TO SCALE |
| DRAWN BY: CM | REVIEWED BY: HM |
| DATE: MARCH 2020 | FIGURE NUMBER: 1 OF 1 |

# APPENDIX II-A

## Asbestos Analytical Certificates

# Pinchin Ltd. Asbestos Laboratory
## *Certificate of Analysis*

| | | | |
|---|---|---|---|
| **Project Name:** | **Public Services and Procurement Canada, HTCC<br>1453 Bath Road, Kingston, Ontario** | | |
| **Project No.:** | **0272921.000** | | |
| **Prepared For:** | **H. MacKillican / G. Hendry / K. Vanderburgt** | | |
| **Lab Reference No.:** | **b228064** | | |
| **Analyst(s):** | **C. Luong** | | |
| **# Samples submitted:** | **9** | **Date Received:** | **March 12, 2020** |
| **# Phases analyzed:** | **9** | **Date Analyzed:** | **March 19, 2020** |

**Method of Analysis:**

**EPA 600/R-93/116 - Method for the Determination of Asbestos in Bulk Building Materials dated July, 1993**

Bulk samples are checked visually and scanned under a stereomicroscope. Slides are prepared and observed under a Polarized Light Microscope (PLM) at magnifications of 40X, 100X or 400X as appropriate. Asbestos fibres are identified by a combination of morphology, colour, refractive index, extinction, sign of elongation, birefringence and dispersion staining colours. A visual estimate is made of the percentage of asbestos present. A reported concentration of less than (<) the regulatory threshold (see chart below) indicates the presence of confirmed asbestos in trace quantities, limited to only a few fibres or fibre bundles in an entire sample. This method complies with provincial regulatory requirements where applicable. Multiple phases within a sample are analyzed and reported separately.

All bulk samples submitted to this laboratory for asbestos analysis are retained for a minimum of three months. Samples may be retrieved, upon request, for re-examination at any time during that period.

The Pinchin Ltd. Mississauga asbestos laboratory is accredited by the National Institute of Standards and Technology, National Voluntary Laboratory Accreditation Program (NVLAP Lab Code 101270-0) for the 'EPA – 40 CFR Appendix E to Subpart E of Part 763, Interim Method of the Determination of Asbestos in Bulk Insulation Samples,' and the 'EPA 600/R-93/116: Method for the Determination of Asbestos in Bulk Building Materials'; and meets all requirements of ISO/IEC 17025:2005.

This report relates only to the items tested.

***NOTE:*** ***This test report may not be reproduced, except in full, without the written approval of the laboratory. The client may not use this report to claim product endorsement by NVLAP or any agency of the U.S. Government. This report is valid only when signed in blue ink by the analyst. Vinyl asbestos floor tiles contain very fine fibres of asbestos and may be missed by some laboratories using the PLM method. Internal verification studies performed by Pinchin indicate that the chance of missing asbestos in floor tiles is no higher than about 2%. The vinyl tile study and laboratory documentation on measurement uncertainty is available upon request. The analysis of dust samples by PLM cannot be used as an indicator of past or present airborne asbestos fibre levels.***

# Pinchin Ltd. Asbestos Laboratory
## *Certificate of Analysis*

**Project Name:** Public Services and Procurement Canada, HTCC
1453 Bath Road, Kingston, Ontario
**Project No.:** 0272921.000
**Prepared For:** H. MacKillican / G. Hendry / K. Vanderburgt

**Lab Reference No.:** b228064
**Date Analyzed:** March 19, 2020

## BULK SAMPLE ANALYSIS

| SAMPLE IDENTIFICATION | SAMPLE DESCRIPTION | % COMPOSITION (VISUAL ESTIMATE) | |
|---|---|---|---|
| | | ASBESTOS | OTHER |
| S0001A<br>Prefabricated concrete panel on exterior wall, south elevation | Homogeneous, grey, hard, cementitious material with woven fibres. | None Detected | Man-made Vitreous Fibres 5-10%<br>Non-Fibrous Material > 75% |
| Comments: | This sample is large in size. A representative portion was taken and analyzed. | | |
| S0001B<br>Prefabricated concrete panel on exterior wall, south elevation | Homogeneous, grey, hard, cementitious material with woven fibres. | None Detected | Man-made Vitreous Fibres 5-10%<br>Non-Fibrous Material > 75% |
| S0001C<br>Prefabricated concrete panel on exterior wall, north elevation | Homogeneous, grey, hard, cementitious material with woven fibres. | None Detected | Man-made Vitreous Fibres 5-10%<br>Non-Fibrous Material > 75% |
| S0002A<br>Mastic on backside of prefabrictaed concrete panel, northeast elevation | Homogeneous, yellow, hard, adhesive material. | None Detected | Non-Fibrous Material > 75% |
| Comments: | Another phase is present but was not analyzed as requested. | | |
| S0002B<br>Mastic on backside of prefabrictaed concrete panel, east elevation | Homogeneous, yellow, hard, adhesive material. | None Detected | Non-Fibrous Material > 75% |
| S0002C<br>Mastic on backside of prefabrictaed concrete panel, north elevation | Homogeneous, yellow, hard, adhesive material. | None Detected | Non-Fibrous Material > 75% |

# Pinchin Ltd. Asbestos Laboratory
## *Certificate of Analysis*

**Project Name:** Public Services and Procurement Canada, HTCC
1453 Bath Road, Kingston, Ontario
**Project No.:** 0272921.000
**Prepared For:** H. MacKillican / G. Hendry / K. Vanderburgt

**Lab Reference No.:** b228064
**Date Analyzed:** March 19, 2020

## BULK SAMPLE ANALYSIS

| SAMPLE IDENTIFICATION | SAMPLE DESCRIPTION | % COMPOSITION (VISUAL ESTIMATE) | |
|---|---|---|---|
| | | ASBESTOS | OTHER |
| S0003A<br>Grey caulking between prefabricated concrete panels, south elevation | Homogeneous, dark grey, rubbery, caulking material. | None Detected | Non-Fibrous Material > 75% |
| S0003B<br>Grey caulking between prefabricated concrete panels, south elevation | Homogeneous, light grey, rubbery, caulking material. | None Detected | Non-Fibrous Material > 75% |
| S0003C<br>Grey caulking between prefabricated concrete panels, south elevation | Homogeneous, light grey, rubbery, caulking material. | None Detected | Non-Fibrous Material > 75% |

**Reviewed by:**

Digitally signed by Iman Yousuf
Date: 2020.03.19 14:31:48 -04'00'

**Reporting Analyst:**

Digitally signed by Iman Yousuf
Date: 2020.03.19 14:31:32 -04'00'

PINCHIN ENVIRONMENTAL

Member of PG The Pinchin Group

Professional Engineers Ontario

Analyzed by: C.L

Reviewed by: KB

Report Sent by: IY

# Pinchin Ltd. - Asbestos Laboratory
# Internal Asbestos Bulk Sample Chain of Custody

| | | | | | | | |
|---|---|---|---|---|---|---|---|
| **Client Name:** | Public Services and Procurement Canada | | | **Project Address:** | 1453 Bath Road, Kingston, Ontario | | |
| **Portfolio/Building No:** | HTCC | | | **Pinchin File:** | 272921 | | |
| **Submitted by:** | Halie MacKillican | | | **Email:** | hmackillican@pinchin.com | | |
| **CC Results to:** | Glenn Hendry | | | **CC Email:** | ghendry@pinchin.com | | |
| | Kristen Vanderburgt | | | | kvanderburgt@pinchin.com | | |
| **Date Submitted:** | March | 11 | 2020 | **Required by:** | March | 17 | 2020 |
| **# of Samples:** | 9 | | | **Priority:** | 5 Day Turnaround | | |
| **Year of Building Construction (*Mandatory, Years ONLY*):** | | | | 2012 | | | |
| **Do NOT Stop on Positive (Sample Numbers):** | | | | | | | |
| **Pinchin Group Company (*Mandatory Field*):** | | | | Pinchin | | | |

| | | | | | |
|---|---|---|---|---|---|
| **To be Completed by Lab Personnel Only:** | | | | | |
| **Lab Reference #:** | b228064 | **Time:** | 24 hour clock | | |
| **Received by:** | MAR 12 2020 KB | **Date:** | Month | Day | Year |
| **Name(s) of Analyst(s):** | C.L | | March | 19 | 2020 |

| Sample Prefix | Sample No. | Sample Suffix | Sample Description/Location (Mandatory) |
|---|---|---|---|
| S | 0001 | A | Prefabricated concrete panel on exterior wall, south elevation ND |
| S | 0001 | B | Prefabricated concrete panel on exterior wall, south elevation ND |
| S | 0001 | C | Prefabricated concrete panel on exterior wall, north elevation ND |
| S | 0002 | A | Mastic on backside of prefabrictaed concrete panel, northeast elevation, ANALYZE MASTIC ONLY ND |
| S | 0002 | B | Mastic on backside of prefabrictaed concrete panel, east elevation ND |
| S | 0002 | C | Mastic on backside of prefabrictaed concrete panel, north elevation ND |
| S | 0003 | A | Grey caulking between prefabricated concrete panels, south elevation ND |

PINCHIN ENVIRONMENTAL

MEMBER OF PG THE PINCHIN GROUP

Professional Engineers Ontario

| Sample Prefix | Sample No. | Sample Suffix | Sample Description/Location (Mandatory) |
|---|---|---|---|
| S | 0003 | B | Grey caulking between prefabricated concrete panels, south elevation ND |
| S | 0003 | C | Grey caulking between prefabricated concrete panels, south elevation ND |

# APPENDIX II-B

## Lead Analytical Certificates

PARACEL LABORATORIES LTD.

TRUSTED.
RESPONSIVE.
RELIABLE.

300 - 2319 St. Laurent Blvd
Ottawa, ON, K1G 4J8
1-800-749-1947
www.paracellabs.com

# Certificate of Analysis

**Pinchin Ltd. (Kingston)**

1456 Centennial Drive, Suite 2
Kingston, ON K7P 0K4
Attn: Halie MacKillican

Client PO: HTCC - 1453 Bath Road, Kingston, ON
Project: 272921
Custody:

Report Date: 13-Mar-2020
Order Date: 11-Mar-2020

**Order #: 2011325**

This Certificate of Analysis contains analytical data applicable to the following samples as submitted:

| Paracel ID | Client ID |
|---|---|
| 2011325-01 | L0001 - Beige on prefabricated concrete panel |

Approved By:

Dale Robertson, BSc
Laboratory Director

Certificate of Analysis

**Client: Pinchin Ltd. (Kingston)**

**Client PO: HTCC - 1453 Bath Road, Kingston, ON**

Report Date: 13-Mar-2020

Order Date: 11-Mar-2020

**Project Description: 272921**

## Analysis Summary Table

| Analysis | Method Reference/Description | Extraction Date | Analysis Date |
|---|---|---|---|
| Metals, ICP-OES | based on MOE E3470, ICP-OES | 13-Mar-20 | 13-Mar-20 |

**Sample Data Revisions**

None

**Work Order Revisions/Comments:**

None

**Other Report Notes:**

n/a: not applicable
ND: Not Detected
MDL: Method Detection Limit
Source Result: Data used as source for matrix and duplicate samples
%REC: Percent recovery.
RPD: Relative percent difference.

Certificate of Analysis

Report Date: 13-Mar-2020

**Client: Pinchin Ltd. (Kingston)**

Order Date: 11-Mar-2020

**Client PO: HTCC - 1453 Bath Road, Kingston, ON**

**Project Description: 272921**

## *Sample Results*

### Lead

**Matrix: Paint**
**Sample Date: 11-Mar-20**

| Paracel ID | Client ID | Units | MDL | Result |
|---|---|---|---|---|
| 2011325-01 | L0001 - Beige on prefabricated concrete panel | % by Wt. | 0.0020 | 0.0301 |

## *Laboratory Internal QA/QC*

| Analyte | Result | Reporting Limit | Units | Source Result | %REC | %REC Limit | RPD | RPD Limit | Notes |
|---|---|---|---|---|---|---|---|---|---|
| **Matrix Blank** | | | | | | | | | |
| **Lead** | **ND** | **0.0020** | **% by Wt.** | | | | | | |
| **Matrix Duplicate** | | | | | | | | | |
| **Lead** | **5.17** | **0.200** | **% by Wt.** | **5.79** | | | **11.30** | **30** | |
| **Matrix Spike** | | | | | | | | | |
| Lead | 201 | 20.00 | % by Wt. | ND | 80.4 | 70-130 | | | |

PARACEL LABORATORIES LTD. | TRUSTED RESPONS RELIABL

**Paracel ID: 2011325**

www.paracellabs.com

OTTAWA · KINGSTON · NIAGARA · MISSISSAUGA · SARNIA

**Chain of Custody**
**(Lab Use Only)**

Page 1 of 1

| | | | |
|---|---|---|---|
| Client Name: | Pinchin Ltd. | Project Reference: | HTCC - 1453 Bath Road, Kingston, ON |
| Contact Name: | Halie MacKillican | Quote # | 272921 |
| Address: | 1456 Centennial Drive, Suite 2, Kingston, ON | PO # | |
| | | Email Address: | hmackillican@pinchin.com |
| Telephone: | 613.541.1013 | | |

TAT: ☑ Regular ☐ 3 Day ☐ 2 Day ☐ 1 Day

Date Required: _____

**Criteria:** ☐ O. Reg. 153 (As Amended) Table __ ☐ RSC Filing ☐ O. Reg. 558/00 ☐ PWQO ☐ CCME ☐ SUB (Storm) ☐ SUB (Sanitary) Municipality: _____ ☐ Other: _____

**Matrix Type:** S (Soil/Sed.) GW (Ground Water) SW (Surface Water) SS (Storm/Sanitary Sewer) P (Paint) A (Air) O (Other)

**Required Analyses**

**Paracel Order Number:** 2011325

| | Sample ID/Location Name | Matrix | Air Volume | # of Containers | Sample Taken Date | Sample Taken Time | Lead | | | | | | | | | | |
|---|---|---|---|---|---|---|---|---|---|---|---|---|---|---|---|---|---|
| 1 | L0001 - Beige on prefabriacted concrete panel | p | | 1 | March 11 2020 | AM | ✓ | | | | | | | | | | |
| 2 | | | | | | | | | | | | | | | | | |
| 3 | | | | | | | | | | | | | | | | | |
| 4 | | | | | | | | | | | | | | | | | |
| 5 | | | | | | | | | | | | | | | | | |
| 6 | | | | | | | | | | | | | | | | | |
| 7 | | | | | | | | | | | | | | | | | |
| 8 | | | | | | | | | | | | | | | | | |
| 9 | | | | | | | | | | | | | | | | | |
| 10 | | | | | | | | | | | | | | | | | |

Comments: cc ghendry@pinchin.com and kvanderburgt@pinchin.com with results

Please report results in percent

Method of Delivery: Pick-up

| | | | |
|---|---|---|---|
| Relinquished By (Sign): | Received by Driver/Depot: | Received at Lab: | Verified By: |
| Relinquished By (Print): Halie MacKillican | Date/Time: Mar 11 2pm | Date/Time: Mar 12/2020 10:12 | Date/Time: Mar 11 2:15 |
| Date/Time: Mar 11 2020 | Temperature: ____ °C | Temperature: ____ °C | pH Verified [ ] By: |

# APPENDIX II-C

## TCLP Analytical Certificates

PARACEL LABORATORIES LTD.

TRUSTED.
RESPONSIVE.
RELIABLE.

300 - 2319 St. Laurent Blvd
Ottawa, ON, K1G 4J8
1-800-749-1947
www.paracellabs.com

# Certificate of Analysis

**Pinchin Ltd. (Kingston)**

1456 Centennial Drive, Suite 2
Kingston, ON K7P 0K4
Attn: Glenn Hendry

Client PO: HTCC - 1453 Bath Road, Kingston, ON
Project: 272921
Custody:

Report Date: 30-Jul-2020
Order Date: 24-Jul-2020

**Order #: 2030582**

This Certificate of Analysis contains analytical data applicable to the following samples as submitted:

| Paracel ID | Client ID |
|---|---|
| 2030582-01 | L0001 - Beige on prefabricated concrete panel |

Approved By:

Dale Robertson, BSc
Laboratory Director

Certificate of Analysis

**Client: Pinchin Ltd. (Kingston)**

**Client PO: HTCC - 1453 Bath Road, Kingston, ON**

Report Date: 30-Jul-2020

Order Date: 24-Jul-2020

**Project Description: 272921**

## Analysis Summary Table

| Analysis | Method Reference/Description | Extraction Date | Analysis Date |
|---|---|---|---|
| Metals, ICP-MS | TCLP EPA 6020 - Digestion - ICP-MS | 30-Jul-20 | 30-Jul-20 |
| Solids, % | Gravimetric, calculation | 30-Jul-20 | 30-Jul-20 |

Certificate of Analysis

Report Date: 30-Jul-2020

**Client: Pinchin Ltd. (Kingston)**

Order Date: 24-Jul-2020

**Client PO: HTCC - 1453 Bath Road, Kingston, ON**

**Project Description: 272921**

| | **Client ID:** | L0001 - Beige on prefabricated concrete panel | - | - | - |
|---|---|---|---|---|---|
| | **Sample Date:** | 11-Mar-20 09:00 | - | - | - |
| | **Sample ID:** | 2030582-01 | - | - | - |
| | **MDL/Units** | Paint | - | - | - |
| **Physical Characteristics** | | | | | |
| % Solids | 0.1 % by Wt. | 100 | - | - | - |
| **EPA 1311 - TCLP Leachate Metals** | | | | | |
| Lead | 0.05 mg/L | <0.05 | - | - | - |

## Method Quality Control: Blank

| Analyte | Result | Reporting Limit | Units | Source Result | %REC | %REC Limit | RPD | RPD Limit | Notes |
|---|---|---|---|---|---|---|---|---|---|
| **EPA 1311 - TCLP Leachate Metals** | | | | | | | | | |
| Lead | ND | 0.05 | mg/L | | | | | | |

## Method Quality Control: Duplicate

| Analyte | Result | Reporting Limit | Units | Source Result | %REC | %REC Limit | RPD | RPD Limit | Notes |
|---|---|---|---|---|---|---|---|---|---|
| **EPA 1311 - TCLP Leachate Metals** | | | | | | | | | |
| Lead | ND | 0.05 | mg/L | ND | | | NC | 32 | |
| **Physical Characteristics** | | | | | | | | | |
| % Solids | 95.3 | 0.1 | % by Wt. | 93.2 | | | 2.3 | 25 | |

Certificate of Analysis

**Client: Pinchin Ltd. (Kingston)**

**Client PO: HTCC - 1453 Bath Road, Kingston, ON**

Report Date: 30-Jul-2020

Order Date: 24-Jul-2020

**Project Description: 272921**

## Method Quality Control: Spike

| Analyte | Result | Reporting Limit | Units | Source Result | %REC | %REC Limit | RPD | RPD Limit | Notes |
|---|---|---|---|---|---|---|---|---|---|
| **EPA 1311 - TCLP Leachate Metals** | | | | | | | | | |
| Lead | 40.1 | 0.05 | mg/L | 0.352 | 79.5 | 77-126 | | | |

**Qualifier Notes:**

***Login Qualifiers :***

This analysis deviated from the prescribed EPA 1311 protocols as 100 g of sample material was not available to be leached. However, the sample mass to extraction fluid volume was maintained at a 1:20 ratio.

*Applies to samples: L0001 - Beige on prefabricated concrete panel*

**Sample Data Revisions**

None

**Work Order Revisions / Comments:**

None

**Other Report Notes:**

n/a: not applicable
ND: Not Detected
MDL: Method Detection Limit
Source Result: Data used as source for matrix and duplicate samples
%REC: Percent recovery.
RPD: Relative percent difference.
NC: Not Calculated

Soil results are reported on a dry weight basis when the units are denoted with 'dry'.
Where %Solids is reported, moisture loss includes the loss of volatile hydrocarbons.

PARACEL | TRUST RESP( RELI

**Paracel ID: 2030582**

OTTAWA KINGSTON NIAGARA MISSISSAUGA SARNIA www.paracelLabs.com

**Chain of Custody**
(Lab Use Only)

Page 1 of 1

| | | | |
|---|---|---|---|
| Client Name: Pinchin Ltd. | Project Reference: HTCC - 1453 Bath Road, Kingston, ON | TAT: ✓ Regular | 3 Day |
| Contact Name: Halie MacKillican | Quote # 272921 | 2 Day | 1 Day |
| Address: 1456 Centennial Drive, Suite 2, Kingston, ON | PO # | | |
| | Email Address: hmackillican@pinchin.com | Date Required: | |
| Telephone: 613 541 1013 | | | |

Criteria: ☐ O. Reg. 153 (As Amended) Table _ ☐ RSC Filing ☐ O. Reg. 558/00 ☐ PWQO ☐ CCME ☐ SUB (Storm) ☐ SUB (Sanitary) Municipality: _____ ☐ Other: _____

Matrix Type: S (Soil/Sed.) GW (Ground Water) SW (Surface Water) SS (Storm/Sanitary Sewer) P (Paint) A (Air) O (Other)

Paracel Order Number: 2030582 2011325

| | Sample ID/Location Name | Matrix | Air Volume | # of Containers | Sample Taken Date | Sample Taken Time | Lead | TCLP Lead | | | | | | | | | |
|---|---|---|---|---|---|---|---|---|---|---|---|---|---|---|---|---|---|
| 1 | L0001 - Beige on prefabricated concrete panel | p | | 1 | March 11 2020 | AM | ✓ | X | | | | | | | | | |
| 2 | | | | | | | | | | | | | | | | | |
| 3 | | | | | | | | | | | | | | | | | |
| 4 | | | | | | | | | | | | | | | | | |
| 5 | | | | | | | | | | | | | | | | | |
| 6 | | | | | | | | | | | | | | | | | |
| 7 | | | | | | | | | | | | | | | | | |
| 8 | | | | | | | | | | | | | | | | | |
| 9 | | | | | | | | | | | | | | | | | |
| 10 | | | | | | | | | | | | | | | | | |

Comments: cc ghendry@pinchin.com and kvanderburgt@pinchin.com with results

Please report results in percent

Method of Delivery: Pick-up

| | | | |
|---|---|---|---|
| Relinquished By (Sign): | Received by Driver/Depot: Alyssa F. | Received at Lab: Dam | Verified By: Alyssa F |
| Relinquished By (Print): Halie MacKillican | Date/Time: Mar 11 8pm. | Date/Time: Mar 12/2020 10.12 | Date/Time: Mar 11 2:15 |
| Date/Time: Mar 11 2020 | Temperature: ____ °C | Temperature: ____ °C | pH Verified [ ] By: |

Chain of Custody (Blank) - Rev 0.1 March 2013.xlsx

7-24-2017

# APPENDIX III

## Methodology

## 1.0 GENERAL

Pinchin conducts a room-by-room survey (rooms, corridors, service areas, exterior, etc.) to identify the hazardous building materials as defined by the scope of work. All work is conducted in accordance with our own internal Standard Operating Procedures.

Information regarding the location and condition of hazardous building materials encountered and visually estimated quantities are recorded. The locations of any samples collected are recorded on small-scale plans.

As-built drawings and previous reports are referenced where provided.

### 1.1 Limitations on Scope

The assessment excludes the following:

- Articles belonging to the owner, tenant or occupant (e.g. stored items, furniture, appliances, etc.).
- Underground materials or equipment (e.g. vessels, drums, underground storage tanks, pipes, etc.).
- Building envelope, structural components, inaccessible or concealed materials or other items where sampling may cause consequential damage to the property.
- Energized systems (e.g. internal boiler components, elevators, mechanical or electrical components).
- Controlled products (e.g. stored chemicals, operational or process-related substances).
- Materials not typically associated with construction (e.g. settled dust, spills, residual contamination from prior spills, etc.).

The assessment includes limited demolition exterior finish finishes to view concealed conditions at representative areas as permitted by the current building use.

### 1.2 Asbestos

An inspection is conducted for the presence of friable and non-friable asbestos-containing materials (ACM). A friable material is a material that when dry can be crumbled, pulverized or powdered by hand pressure.

A separate set of samples is collected of each type of homogenous material suspected to contain asbestos. A homogenous material is defined by the US EPA as material that is uniform in texture and appearance, was installed at one time, and is unlikely to consist of more than one type or formulation of

material. The homogeneous materials are determined by visual examination and available information on the phases of construction and prior renovations.

Samples are collected at a rate that is in compliance with the requirements of local regulations and guidelines. The sampling strategy is also based on known ban dates and phase out dates of the use of asbestos; sampling of certain building materials is not conducted after specific construction dates. In addition, to be conservative, several years past these dates are added to account for some uncertainty in the exact start / finish date of construction and associated usage of ACM.

In some cases, manufactured products such as asbestos cement pipe are visually identified without sample confirmation.

The following materials (if present) are not sampled and will be presumed to contain asbestos:

- Mechanical packing, ropes and gaskets.
- Adhesives and duct mastics.
- Fibre-reinforced paints and coatings.
- Materials concealed or outside the scope.

The bulk samples are submitted to a NVLAP accredited laboratory for analysis. The analysis is performed in accordance with Test Method EPA/600/R-93/116: Method for the Determination of Asbestos in Bulk Building Materials, July 1993.

Analytical results are compared to the following criteria:

| Jurisdiction | Friable | Non-Friable |
|---|---|---|
| BC | 0.5%[1] | 0.5% |
| Alberta | Any Amount[2] | Any Amount[2] |
| Saskatchewan | >0.5%[1] | >1% |
| Manitoba | 0.1%[1] | 1% |
| Ontario | 0.5% | 0.5% |
| Nova Scotia | 0.5%[1] | 0.5% |
| New Brunswick, Prince Edward Island, Newfound & Labrador | 1% | 1% |
| Yukon, Nunavut, Northwest Territories | 1% | 1% |
| Federal | 1% | 1% |

[1] Or any amount if vermiculite
[2] The Government of Alberta in their guideline document entitled the “Alberta Asbestos Abatement Manual” (August 2019), defines an Asbestos-Containing Material as a product or building material that contains asbestos in any quantity or percentage.

The asbestos analysis is completed using a stop positive approach. Only one result meeting the above regulated criteria is required to determine that a material is asbestos-containing, but all samples must be analyzed to conclusively determine that a material is non-asbestos. The laboratory stops analyzing samples from a homogeneous material once a result equal to or greater than the regulated criteria is detected in any of the samples of that material. All samples of a homogeneous material are analyzed if no asbestos is detected. In some cases, all samples are analyzed in the sample set regardless of result.

Where building materials are described in the report as “non-asbestos” or “does not contain asbestos”, this means that either no asbestos was detected by the analytical method utilized in any of the multiple samples or, if detected, it is below the lower limit of an asbestos-containing material in the applicable regulation.

Asbestos materials are evaluated in order to make recommendations regarding remedial work. The priority for remedial action is based on several factors:

- Friability (friable or non-friable).
- Condition (good, fair, poor, debris).
- Accessibility (ranking from accessible to all building users to inaccessible).
- Efficiency of the work (for example, if damaged ACM is being removed in an area, it may be most practical to remove all ACM in the area even if it is in good condition).

## 1.3 Lead

Samples of distinctive paint finishes, and surface coatings present in more than a limited application, where removal of the paint is possible is collected. The samples are collected by scraping the painted finish to include base and covering applications. Drawings included show sample locations.

Analysis for lead in paints or surface coatings is performed at an accredited laboratory in accordance with EPA Method No. 3050B/Method No. 7420; flame atomic absorption, or equivalent.

The Ontario Ministry of Labour (MOL) has not established a lower limit for concentrations of lead in paint, below which precautions do not need to be considered during construction projects. Pinchin follows the recommendations of the Environmental Abatement Council of Ontario (EACO) Lead Guideline for Construction, Renovation, Maintenance or Repair. The Guideline suggests that 0.1% (1,000 ppm) lead in paint represents a de minimis concentration of lead in paint for construction hygiene purposes, that is a concentration below which the lead content is not the limiting hazard in any disturbance of leaded paint for non-aggressive disturbance of painted finishes, (hand powered demolition, chipping, scraping, light sanding, etc.). The use of aggressive methods such as power grinding, torching, welding, etc. may result in significant lead exposures even with low concentrations of lead in paints (below 0.1%). Exposure from

construction disturbance of paints containing lead less than 0.009% is assumed to be insignificant. Paint and surface coatings are evaluated for condition such as flaking, chipping or spalling.

Other lead building products (e.g. batteries, lead sheeting, flashing) are identified by visual observation only.

Pinchin reviews the bulk samples results for elevated concentrations of lead. Where elevated concentrations are present, paint samples including the substrate (e.g., wood, concrete, plaster) are submitted for Toxicity Characteristic Leaching Procedure (TCLP) analysis. Analytical results are compared against local provincial requirements for waste characterization.

### 1.4 Silica

Building materials known to contain crystalline silica (e.g. concrete, cement, tile, brick, masonry, mortar) is identified by visual inspection only. Pinchin does not perform sampling of these materials for laboratory analysis of crystalline silica content.

### 1.5 Mercury

Building materials/products/equipment (e.g. thermostats, barometers, pressure gauges, light tubes), suspected to contain mercury are identified by visually inspection only. Dismantling of equipment suspected of containing mercury is not performed. Sampling of these materials for laboratory analysis of mercury content is not performed.

### 1.6 Polychlorinated Biphenyls

The potential for light ballast and wet transformers to contain PCBs is based on the age of the building, a review of maintenance records and examination of labels or nameplates on equipment, where present and accessible. The information is compared to known ban dates of PCBs and Environment Canada publications.

Dry type transformers are presumed to be free of dielectric fluids and hence non-PCB.

Fluids (mineral oil, hydraulic, Aroclor or Askarel) in transformers or other equipment are not sampled for PCB content.

Caulking or sealants are sampled for PCBs based on the date of construction or installation. Caulking installed after 1985 (1980 ban date plus a reasonable non-compliance period based on our experience) is presumed to be free of PCBs and hence not sampled. If sampled, analysis for PCBs is performed using an ASTM test method appropriate to the sample matrix at an accredited laboratory. Sample results are compared to the criteria of 50 ppm for solids as stated in the PCB Regulation, SOR/2008-273.

## 1.7 Visible Mould

The presence of mould is determined by visual inspection of exposed building surfaces. If any mould growth is concealed within building cavities it is not addressed in this assessment.

Template: Methodology for Hazardous Building Materials Assessment, HAZ, January 10, 2020

**APPENDIX IV**

**Location Summary Report**

HMIS
HAZARDOUS MATERIALS INVENTORY SYSTEM

# LOCATIONS LIST

PINCHIN
1.855.PINCHIN www.pinchin.com

**Client:Public Services and Procurement Canada**
**Building Name: HTCC**
**Surveyor: Halie Mackillican**
**Reassessment Surveyor:**

**Site: 1453 Bath Rd, Kingston, ON**
**Survey Date:**
**Last Re-Assessment: 0000-00-00**

| Location No. | Name or Description | $ft^2$ | Floor No. | Notes |
|---|---|---|---|---|
| 1 | Exterior | 0 | | |



Quantities shown above are based on visual approximations only and may be subject to variation.

# APPENDIX V

## Hazardous Materials Summary Report / Sample Log

HMIS
HAZARDOUS MATERIALS INVENTORY SYSTEM

# HAZARDOUS MATERIALS SUMMARY / SAMPLE LOG

PINCHIN
1.855.PINCHIN www.pinchin.com

**Client:Public Services and Procurement Canada** **Site: 1453 Bath Rd, Kingston, ON** **Building Name: HTCC** **Surveyor: Halie Mackillican** **Survey Date:**

| HAZMAT | Sample No | System/Material/Sample Description | Locations | LF | SF | EA | % | Type | Positive |
|---|---|---|---|---|---|---|---|---|---|
| Asbestos | S0001 ABC | WALL \| CONCRETE (PRECAST) \| PREFABRICATED PANELS | 1 | 0 | 0 | 0 | 0 | None Detected | No |
| Asbestos | S0002 ABC | WALL \| MASTIC \| | 1 | 0 | 0 | 0 | 0 | None Detected | No |
| Asbestos | S0003 ABC | WALL \| CAULKING \| GREY, BETWEEN PREFABRICATED PANELS | 1 | 0 | 0 | 0 | 0 | None Detected | No |
| Lead Paint | L0001 | WALL \| CONCRETE (PRECAST) \| BEIGE | 1 | 0 | 0 | 0 | 0 | Lead | Yes |

# Legend:

| Sample number | |
|---|---|
| S#### | Asbestos sample collected |
| L#### | Lead sample collected |
| P#### | PCB sample collected |
| M#### | Mould sample collected |
| V#### | Material visually similar to numbered sample collected |
| V0000 | Known non Hazardous Material |
| V9000 | Material is visually identified as Hazardous Material |
| V9500 | Material is presumed to be Hazardous Material |

| Units | |
|---|---|
| SF | Square feet |
| LF | Linear feet |
| EA | Each |
| % | Percentage |

**APPENDIX VI**

**HMIS Data Report**

HMIS
HAZARDOUS MATERIALS INVENTORY SYSTEM

# ALL DATA REPORT

PINCHIN
1.855.PINCHIN www.pinchin.com

**Client: Public Services and Procurement Canada** **Site: 1453 Bath Rd, Kingston, ON** **Building Name: HTCC**
**Location: #1 : Exterior** **Floor:** **Room #:** **Area (sqft): 0**
**Surveyor: Halie Mackillican** **Survey Date: 2020-03-11** **Reassessment Surveyor:** **Last Re-Assessment: 0000-00-00**

**ASBESTOS**

| System | Component | Material | Item | Covering | A* | V* | AP* | Good | Fair | Poor | Unit | Sample | Asbestos Type | Amount | Hazard |
|---|---|---|---|---|---|---|---|---|---|---|---|---|---|---|---|
| Ceiling | All | None Found | | | | | | | | | | | | | |
| Duct | All | None Found | | | | | | | | | | | | | |
| Floor | All | None Found | | | | | | | | | | | | | |
| Mechanical Equipment | All | None Found | | | | | | | | | | | | | |
| Piping | All | None Found | | | | | | | | | | | | | |
| Structure | All | None Found | | | | | | | | | | | | | |
| Wall | All | Concrete (precast), Prefabricated panels | ALL | Paint | A | Y | | | | | | S0001ABC | None Detected | N.D. | None |
| Wall | All | Mastic | ALL | Cement Product | D | N | | | | | | S0002ABC | None Detected | N.D. | None |
| Wall | Fascia | Caulking, Grey, between prefabricated panels | | | A | Y | | | | | | S0003ABC | None Detected | N.D. | None |

**Client: Public Services and Procurement Canada** **Site: 1453 Bath Rd, Kingston, ON** **Building Name: HTCC**
**Location: #1 : Exterior** **Floor:** **Room #:** **Area (sqft): 0**
**Surveyor: Halie Mackillican** **Survey Date: 2020-03-11** **Reassessment Surveyor:** **Last Re-Assessment: 0000-00-00**

**LEAD PAINT**

| System | Item | Good | Poor | Unit | Sample | Sample Description | Amount | Lead |
|---|---|---|---|---|---|---|---|---|
| Wall | Concrete (precast) | | | | L0001 | Beige | 0.0301 | Yes |

**Client: Public Services and Procurement Canada** **Site: 1453 Bath Rd, Kingston, ON** **Building Name: HTCC**
**Location: #1 : Exterior** **Floor:** **Room #:** **Area (sqft): 0**
**Surveyor: Halie Mackillican** **Survey Date: 2020-03-11** **Reassessment Surveyor:** **Last Re-Assessment: 0000-00-00**

**PCB**

| Component | Quantity | Unit | Sample | Sample Description | PCB |
|---|---|---|---|---|---|
| CAULKING | | | V0000 | Grey, 2012 application | No |

# Legend:

| Sample number | |
|---|---|
| S#### | Asbestos sample collected |
| L#### | Lead sample collected |
| P#### | PCB sample collected |
| M#### | Mould sample collected |
| V#### | Material is visually identified to be identical to S#### |
| V0000 | Known non hazardous material |
| V9000 | Material visually identified as a Hazardous Material |
| V9500 | Material is presumed to contain hazardous material |

| Units | |
|---|---|
| SF | Square feet |
| LF | Linear feet |
| EA | Each |
| % | Percentage |
| LF | Linear feet |

| Other | |
|---|---|
| SVM | Suspect Visible Mould |
| A | Access |
| V | Visible |
| AP | Air Plenum |
| F | Friable material |
| NF | Non Friable material |

| Access | |
|---|---|
| A | Accessible to all building occupants |
| B | Accessible to maintenance and operations staff without a ladder |
| C | Accessible to maintenance and operations staff with a ladder. Also rarely entered, locked areas |
| D | Not normally accessible |

| Condition | |
|---|---|
| Good | No visible damage or deterioration |
| Fair | Minor, repairable damage, cracking, delamination or deterioration |
| Poor | Irreparable damage or deterioration with exposed and missing material |

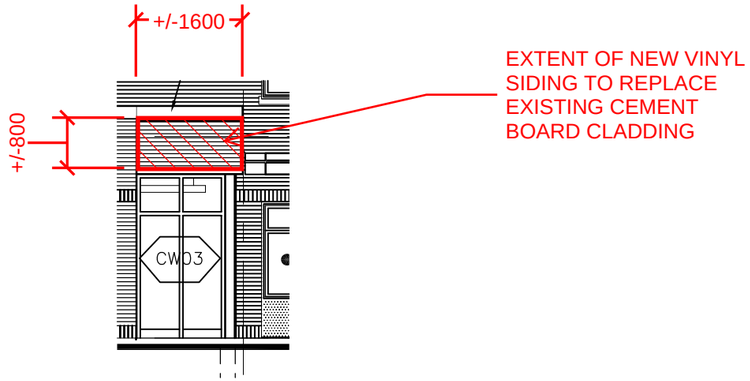


5 / SK-1 NORTH ELEVATION

SCALE: 1:100


3 / SK-1 PHOTO

NTS

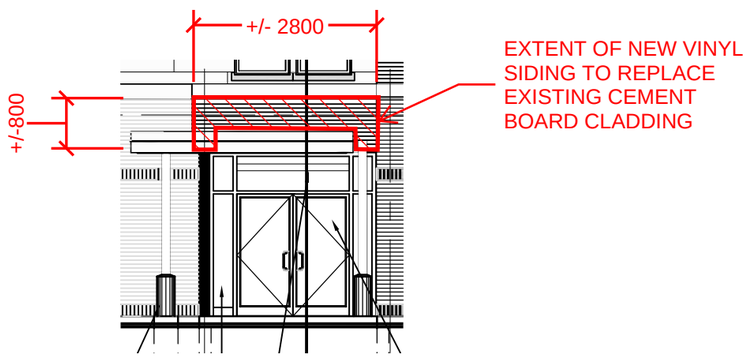


4 / SK-1 WEST ELEVATION

SCALE: 1:100

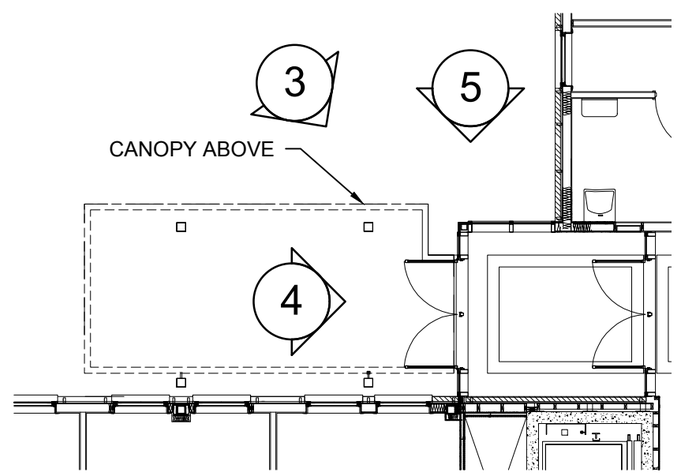


2 / SK-1 CANOPY PLAN

SCALE: 1:100

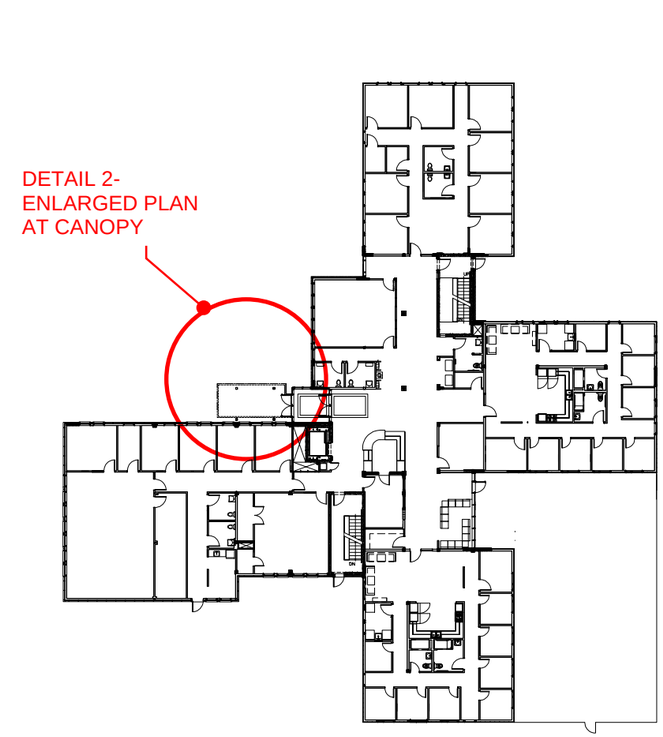


1 / SK-1 OVERALL PLAN

SCALE: 1:500

REFER TO SHEET A106 FOR TYPICAL VINYL ASSEMBLY DETAILS. WORK INCLUDES DEMOLITION OF EXISTING CEMENT BOARD PANELS AND SUBSTRATES AS ILLUSTRATED IN SHEET A103.

ONTARIO ASSOCIATION OF ARCHITECTS
JILL TAYLOR
LICENCE 4431

SIDING REPLACEMENT AT CANOPY ENTRY

SCALE: VARIES

Public Works and Government Services Canada / Travaux publics et Services gouvernementaux Canada

TAYLOR I HAZELL ARCHITECTS LTD.

HENRY TRAILL CORRECTIONAL CENTRE- EXTERIOR FACADE REPLACEMENT

R.021850.003/ THA 1915

DATE: 2020-09-01

SK-1

ADDENDUM 1