Chiller Schedule

Tag	Refrigeration Capacity	Refrigerant	Fullload Efficiency	Partload Efficiency	Condenser											Evaporator											Electrical							
					Inlet Temperature	Outlet Temperature	Flow Rate			Fluid Type	Pressure Drop			Arrangement		Inlet Temperature	Outlet Temperature	Flow Rate			Fluid Type	Pressure Drop			Arrangement		Line Volt	Starter Type	Min Circuit Ampacity	Max Overcurrent Protection	Low Voltage AFD Type	Low Voltage AFD Enclosure Type	Low Voltage AFD Connection Type	c/w Purge Unit
CH2							Design	Min	Max		Design	Min	Max	Inlet	Outlet			Design	Min	Max		Design	Min	Max	Inlet	Outlet								
	750 tons	R-514A	.499 kW/ton	.312 kW/ton	29.4°C	34.3°C	142.0 L/s	58.2 L/s	213.7 L/s	Water	23.7 ft H2O	4.9 ft H2O	48.5 ft H2O	Left Side	Left Side	11.0°C	7.2°C	157.7 L/s	58.9 L/s	323.7 L/s	Water	9.5 ft H2O	1.5 ft H2O	35.4 ft H2O	Right Side	Left Side	575V	VFD	519 A	800 A	RM Air-Cooled AFD w/o Harmonic Filter	Standard Enclosure NEMA 1	Fused Disconnect Switch	

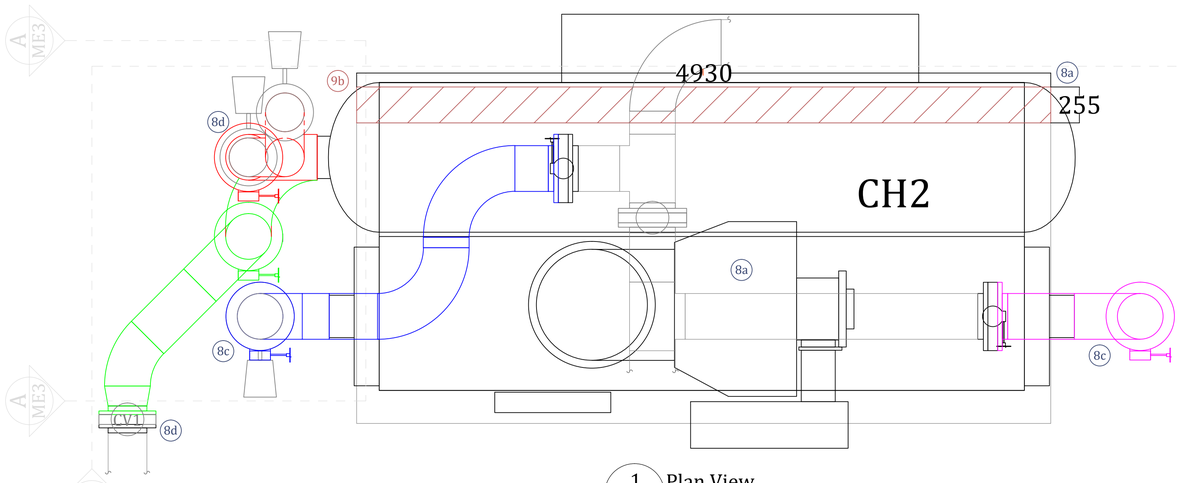

1 ME3 Plan View
1:20

Part 8 - New Mechanical

(a) Supply and install new Chiller 2. Align the chilled water inlet and outlet of Chiller 2 with existing chilled water supply & return pipes above.
(b) Connect new chilled water supply and return pipework to new chiller 2 as indicated. Reinstall control valve that was removed previously. Provide new manual isolation valves.
(c) Provide a victaulic 12``Ø 90° for both the chilled water inlet and outlet connections. These are the only victaulic fittings involved with this installation.
(d) Weld supports at the top of both the chilled water supply and return vertical pipes to existing structural steel above.
(e) Connect new condenser water supply and return pipework to new chiller 2 as indicated. Reinstall control valves that were removed previously in locations shown. Provide new 12"Ø wheel style isolation valves.
(f) Weld pipe supports to the bottom of the 90° of both the condenser inlet and outlet and secure to the floor below.
(g) Reinstall pressure sensors between the new condenser inlet and outlet pipewor, similar to previous
(h) Provide 2" thick insulation around all new chilled water pipework.
(i) Paint new condenser water pipework to match existing (green)
(j) Provide ¾"Ø valves at the bottom of each condenser & chilled water inlet & outlet to allow for draining

Part 9 - Concrete Pads

(a) Submit rebar, dowel, and concrete installation plan with the Owner before doing any concrete work.
(b) New Chiller 2 255mm Extension - Extend existing pad 255mm westward. Dowel every 600mm.
(c) Provide a new 1015 x 2035 x 100 pad for new Condenser Pump Variable Speed Drives in location shown.
(d) Provide a new 610 x 2135 x 100 pad for new Chilled Water Pump Variable Speed Drives in location shown.

General Notes

Print this Drawing on Arch D paper size in Colour. Dark and Coloured lines indicate new work. Greyed lines indicate existing pipework to remain

The project involves the replacement of Chiller 2 at the Canada Centre for Inland Waters. The existing Chiller 2 will be removed and a new centrifugal goes in its place, connected to existing 12"Ø Chilled Water & 10"Ø Condenser pipes nearby. The new Condenser water connections are 12"Ø. Each existing condenser water and chilled water pump gets its own 75hp 600V variable speed drive c/w a bypass. The cooling output of new Chiller 2 is controlled by an adaptive frequency drive which will be located where MCC-1A and Chiller 1 Cabinet are currently located. To accomodate this, MCC1-1A and Chiller1 Cabinet are to be removed. The existing Chiller 1 power feed gets extended to the Chiller 2 Cabinet (which becomes Chiller 1 Cabinet). Other electrical removals and relocations are involved. The new chiller get's integrated with the existing Canada Centre for Inland Waters Building Automation System(Delta Controls). The contractor is required to hire Delta Controls technician Cheugh Yang Li, who will oversee all programming and final control wire connections to end devices. New Concrete Pads are required for the 4 new variable speed drives, and the existing Chiller 2 pad gets widened slightly to accomoate new Chiller 2.

Insulation - Provide 2" thick insulation over all new chilled water supply and return pipework

All new 65mmØ or larger pipework connections shall be flanged and welded. New 50mmØ and smaller pipework may be threaded. Schedule 40 for all new pipes

Owner will supply:
a. Temperature Sensors & Wells
b. Condenser Water & Chilled Water Control Valves

Legend

Chilled Water Supply	
Chilled Water Return	
Condenser Inlet	
Condenser Outlet	
New Chiller Mechanical	
Concrete Pad	
Isolation Valve	Pipe Well
Pressure Gauge	2-Way Valve
Reducer	Thermometer
Temperature Sensor	Pressure Sensor

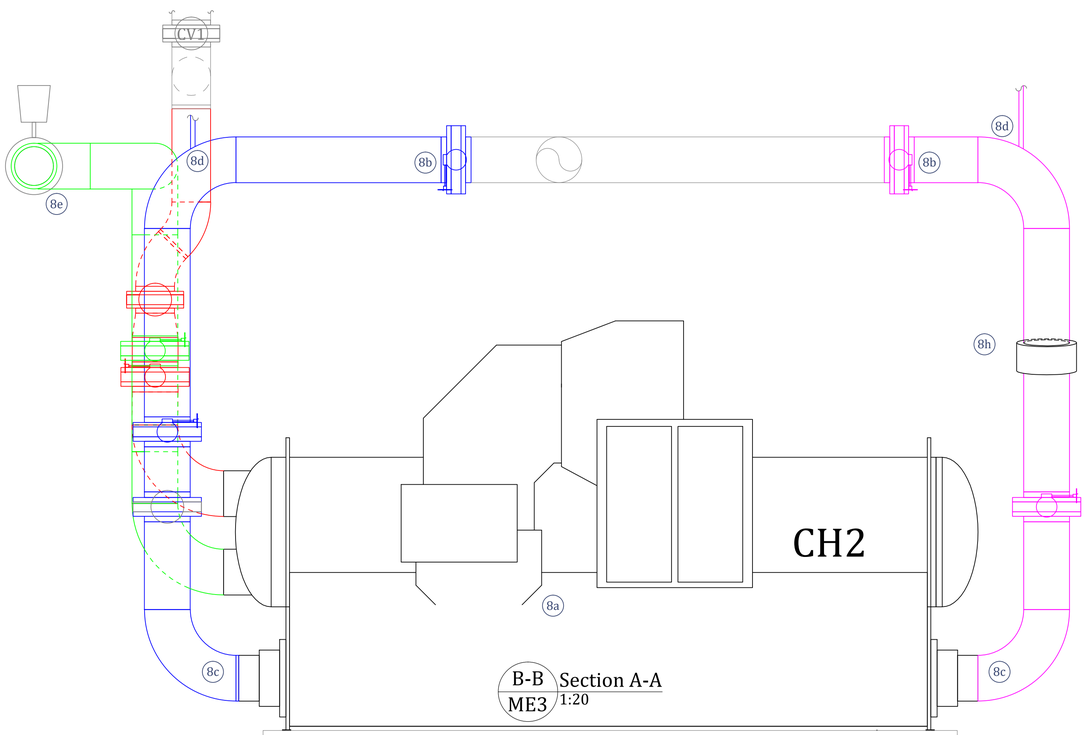

B-B ME3 Section A-A
1:20

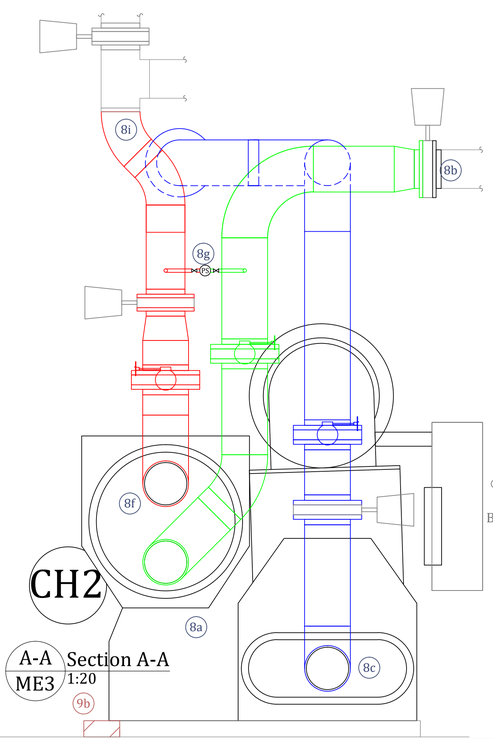

A-A ME3 Section A-A
1:20

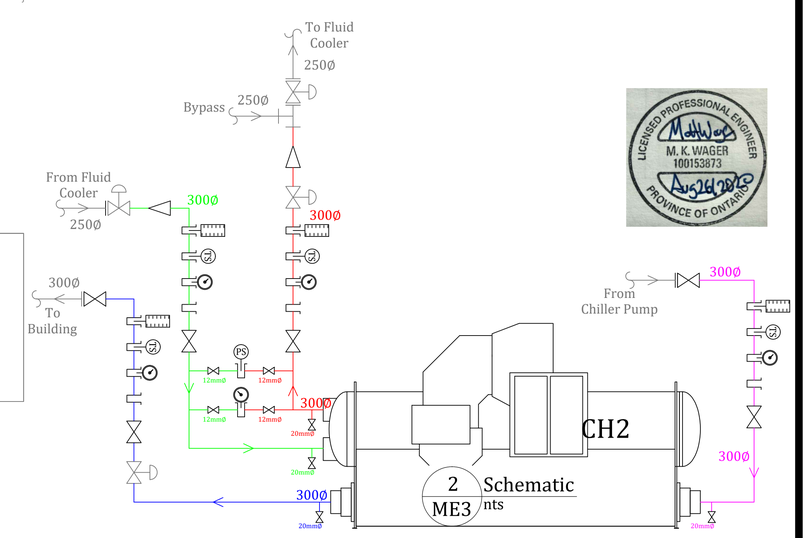

2 ME3 Schematic
nts

LICENSED PROFESSIONAL ENGINEER
M. K. WAGER
100153873
Aug 24, 2020
PROVINCE OF ONTARIO

DATE	REVISON	Drawn/Dessine	Date/Date	
		DWG. Title/Titre Dessin: Chiller 2 Replacement New Mechancial	May 2020	DWG # / DESSIN #: ME3
			Scale/Echelle: As Noted	

Environment and Climate Change Canada / Environnement et Changement Climatique Canada
Property Management / Gestion de l'immobilier
CANADA CENTRE FOR INLAND WATERS
LE CENTRE CANADIEN DES EAUX INTÉRIEURES
867 LAKESHORE RD
BURLINGTON, ON L7S 1A1