INTEGRATED TECHNICAL SERVICES
MARINE ENGINEERING

CCGS Terry Fox

Dry-docking – Refit

F6855-200980

Oct 22/20 – Jan 28/21

Revision #1

Index for CCGS Terry Fox 2020 Drydocking / Refit.

PREAMBLE

1. INTENT
The intent of this specification shall describe the necessary work involved in carrying out the CCGS Terry Fox Drydocking and to complete the Annual Refit Oct. 22/20 – Jan. 28/21. All work specified herein and all repairs, inspections and renewals shall be carried out to the satisfaction of the Technical Authority/Owner's Representative and where applicable the attending ABS Marine Safety Inspector. Unless otherwise specifically stated, the Technical Authority/ Owner's Representative is the Chief Engineer.

2. MANUFACTURER'S RECOMMENDATIONS
The overhaul and installation of all machinery and equipment specified herein shall be as per the manufacturer's applicable instructions, drawings and specifications. The surface preparation, ambient limitations and coating applications shall be as per the manufacturer's instructions and specifications.

3. TESTING AND RECORDS
All test results, calibrations, measurements and readings are to be recorded. Three typewritten copies, in English, are to be presented to the Technical Authority and one copy to the Project Authority within three days following the completion of the applicable work item. All tests are to be witnessed by the Technical Authority and where required, ABS Marine Safety. The Contractor is responsible for contacting ABS when their presence is required for inspections or testing. The Contractor shall advise the Technical Authority in every case when ABS Marine Safety arrives onsite for inspection of vessel's equipment or structure.

4. WORKMANSHIP
The contractor shall use fully qualified, certified and competent tradesmen and supervision to ensure a uniform high level of workmanship as judged by normally accepted shipbuilding standards and to the Owner's satisfaction.

5. FACILITIES
Quotation shall include all of the necessary labor and equipment required for the erection of access staging, rigging, lighting, tugs, pilotage, necessary cranage and line handling.

6. MATERIALS AND SUBSTITUTIONS
All material shall be supplied by the contractor and all materials shall be new and unused unless otherwise specified. All replacement material in the form of jointing, packing, insulation, small hardware, oils, lubricants, cleaning solvents, preservatives, paints, coatings, etc., shall be in accordance with the equipment manufacturer's drawings, manuals or instructions. Where no particular item is specified, or where substitution must be made, the Owner's representative must approve all material offered. Material data shall be provided in English to Chief Engineer.

7. REMOVALS
Any items of equipment to be removed and subsequently reinstalled in order to carry out work specified or for access to carry out the work specified, shall be jointly inspected for damages prior to removal by both the contractor and Owner's representative.

8. EXPOSURE AND PROTECTION OF EQUIPMENT
The contractor shall provide adequate temporary protection for any equipment or areas affected by this refit. The contractor shall take proper precautions to maintain in a proper state of preservation any machinery, equipment, fittings, stores or items of outfit which might become damaged by exposure, movement of materials, sand grit or shot blasting, welding, grinding, burning, gouging, painting or airborne particles of paint. Any damage shall be the responsibility of the contractor. Government furnished equipment and materials shall be received by the contractor and stored in a secure warehouse or storeroom having a controlled environment appropriate to the equipment as per the manufacturer's instructions.

9. LIGHTING AND VENTILATION
Temporary lighting and/or temporary ventilation required by the contractor to carry out any item of this specification shall be supplied, installed and maintained in a safe working condition by the contractor and removed upon the completion of work.

10. CLEANLINESS
The contractor shall at all times, maintain the work areas in which his personnel have access in a clean condition and free from debris. Dirt & debris generated by the spec items shall be cleaned up and removed from the vessel daily. Upon completion of this refit, the contractor shall ensure that the vessel is in a clean condition, free from all foreign material in any system or location placed there as a result of this refit. The contractor shall provide adequate temporary protection for any equipment or areas affected by this refit. The contractor shall dispose of any and all oil and water residue, which accumulates in the machinery space bilges as a result of any refit work detailed in this specification.

11. ASBESTOS
Any and all insulation materials shall be asbestos free and approved for the required application.

12. ENTRY INTO ENCLOSED SPACES

The contractor shall abide by the Coast Guard Enclosed Space Entry Policy. The policy is listed in the attached Safety Annex as section 7.0.9 and section 7.0.9 (N). Entry certificates shall clearly state the type of work permitted and shall be renewed as required by the regulations. Additional copies of these certificates shall be posted in conspicuous locations for the information of ship and contractor personnel.

A fire zone shall be established and naked lights shall not be used within this zone until "gas-free" certification has been issued.

The Contractor is to ensure that any work carried out in confined spaces as defined by the Canada Labor Code complies fully with all provisions of the code.

A number of spaces onboard the vessel are designated as Enclosed Spaces; these spaces are to be entered only under safe and controlled circumstances. The Contractor shall have in place an Enclosed Space Entry Permit system, equal to or better than the procedure contained in the Coast Guard's Safety Management System, section 7.D.9. Ship's breathing apparatus and EEBD's are not to be used except in an emergency.

The Contractor will maintain a log denoting the date, persons in the tank and times in and out. All forms and permits shall be completed in English.

13. Suspension Of Work

The Technical Authority reserves the right to suspend work immediately when that work is being performed in contravention of the Coast Guard's Safety Management System. Work shall be allowed to resume when the Technical Authority, in consultation with the Contractor and PWGSC, is satisfied that the agreed-upon procedures are in place and being adhered to.

14. HOTWORK

Any item of work involving the use of heat in its execution requires that the contractor advise the owner's representative prior to starting such heating and upon its completion. The contractor shall be responsible for maintaining a competent and properly equipped fire watch during and for one full hour after all hotwork. The fire watch shall be arranged such that all sides of surfaces being worked on are visible and accessible. The contractor shall provide sufficient suitable fire extinguishers and a fire watch during any such heating and until the work has cooled. Ship's extinguishers shall not be used except in an emergency. The Contractor shall abide by the Coast Guard Hotwork Policy. The policy is listed in the attached Safety Annex as section 7.D.ll and section 7.D.ll (N). The contractor shall be responsible to ensure the contractor's personnel including any subcontractors shall follow the policy. All forms / permits shall be completed in English.

15. LOCKOUT AND TAGOUT PROCEDURES

1. The Contractor shall be responsible to protect persons working on board the vessel while working on or near shipboard systems and equipment from accidental exposure to:
- electrical currents
- hydraulic
- pneumatic
- gas or steam pressure and vacuum
- high temperatures
- cryogenic temperatures
- radio frequency emissions
- potentially reactive chemicals
- stored mechanical energy
- equipment actuation

2. The contractor, under the supervision of the Chief Engineer and or the Electrical Officer, shall be responsible for the Lockout and Tagout of equipment and systems listed in the specification.
3. The Contractor shall supply and install all locks and tags and shall complete the Lockout Tagout Log sheet provided by the Vessel.
4. The Contractor shall remove all locks and tags and complete the Lockout Tagout Log sheet provided by the Vessel.

16. PAINTING

All new and disturbed steelwork that will not be on the underwater wetted surface of the ship's hull is to be protected with two coats of Contractor supplied primer. Unless otherwise stated in the individual specification item, the primer is to be International Paints Interplate Zinc Silicate *NQA262INQA026* red. The paint is to be applied as per the manufacturer's instructions on their respective product data sheets. Finish coats are described in individual specification items. Finish coats are to be applied as per the manufacturer's instructions on their respective product data sheets.

17. WELDING

Welding shall be in accordance with the Canadian Coast Guard Welding Specifications for Ferrous Materials, Revision 4. (TP6151 E)
The Contractor shall be currently certified by the Canadian Welding Bureau (CWB) in accordance with CWB 47.1 latest revision Division I, II or III at the time of bid closing.
The Contractor shall provide a current letter of validation from the CWB indicating compliance with standard CSA W47.1, Division I, II or III. (latest revision)
The Contractor may be required to provide approved procedure data sheets for each type of joint and welding position that will be involved in this refit.
The Contractor may be required to supply a current Welders Ticket for each individual welder that will be involved in this refit.

18. SMOKING

The Public Service Smoking Policy forbids smoking in all Government ships in areas inside the ship where shipyard personnel will be working. The contractor shall inform shipyard workers of this policy and ensure that it is complied with.

19. RESTRICTED AREAS
The following areas are out of bounds to shipyard personnel except to perform work as required by the specifications: all cabins, offices, Wheelhouse, Control Room, Engineer's office, public washrooms, cafeteria, dining room and lounge areas.

20. ELECTRICAL STANDARDS
Any electrical installations or renewals shall be in accordance with the latest editions of the following marine standards:
(a) TP 127E-TC Marine Safety Electrical Standards.
(b) IEEE Standard 45 - Recommended Practice for Electrical Installation on Shipboard.
If any cable installed within this contract is found to be damaged, shorted or opened as a result of the manner of installation, the entire length of cable shall be replaced and installed at no cost to the Department. Plastic tie-wraps may be used to secure wiring in panels or junction boxes only.

21. DRAWINGS
All drawings and drawing revisions that the contractor is requested to do in the execution of this contract shall be of a quality equal to that of the drawings that are requested to be updated. For example, drawings that have been lettered and dimensioned in a professional manner shall not be updated using freehand. Prints and reproductions that a contractor is required to provide shall be made on one piece of paper.
Sign off and acceptance of jobs will not occur until any and all drawings are updated to the satisfaction of the Owner's representative. All revisions shall be noted in English.

22. TRANSDUCERS
The contractor shall not paint the transducers and all transducers shall be afforded the necessary protection during hull cleaning, blasting, burning, welding and coating operations.

23. OWNER'S REPRESENTATIVE
Throughout this document, there is made reference to the Owner's Representative. For the purpose of this document, the Owner's representative is defined as the Chief Engineer of the Vessel.

24. Regulatory Authority Inspections
The Contractor shall confirm a schedule of inspections with the regulatory authority (ABS) for all work described in this specification and shall be responsible for calling them when inspections are required and for ensuring the work is credited by the regulatory authority in the Chief Engineer's 'Hull and Machinery Survey Book' .
The contractor shall ensure the Chief Engineer is informed when the regulating authority is onsite such that the Chief Engineer can witness the inspections by the regulating authority.
Notwithstanding any errors, omissions, discrepancies, duplication or lack of clarity in these project requirements, it shall be the responsibility of the Contractor to ensure that the execution of the work specified herein is to the satisfaction of the Technical Authority.
Inspection of any item by the Technical Authority does not substitute for any required inspection by ABS Surveyor.

25. Waste Oil Products
Disposal of waste oil products shall be carried out by the Contractor, or subcontractor, who has been licensed by provincial authorities for the disposal of petroleum products. Copies of certificates must be produced upon request. This must be in accordance with the Coast Guard Policy for Handling Fuel, Oil, and Waste Oil Products, which is part of the Fleet Safety Manual, section 7.C.3. a copy of which is in the attached safety annex.

26. WHMIS
The contractor shall provide current MSDS sheets for any WHMIS-controlled products used onboard or around the vessel at the start of the work period before the products are used. This includes at the minimum MSDS sheets for any solvents, cleaners, chemicals, coatings and blasting grits to be used. Any neutralizing chemicals or specialized protective equipment required shall be provided by the Contractor at all times these WHMIS-controlled products are onboard the vessel.

27. SAFETY ANNEX
The Contractor shall follow the Coast Guard Policies as outlined in the attached Safety Annex. This Annex contains excerpts from the Fisheries and Oceans Canada, Canadian Coast Guard Fleet Safety Manual (DFO 5737) and deals with contractor responsibilities for items such as Hot Work, Confined Space Entry, Diving, Diving Operations, Contractor Safety & Security (10.A.7 FSM) and Drydocking.
An electronic copy of the Fleet Safety Manual (Adobe Acrobat .PDF version) can be found at
http://142.130.14.20Ifleet-flotte/Safety/maine.htm
Safety Familiarization
The Contractors Basic Safety Familiarization shall be completed for all contractors working on CCG vessels. It will verify that a basic safety briefing has been given, understood and acknowledged by the contractor. All contractors shall follow applicable OHS regulations in accordance with CCG safety/security/environmental requirements, fire alarm protocol and conduct to follow in case of fire or other emergency situations, familiarization of restricted areas and spaces, known risks and hazards encountered at the worksite (ie asbestos, fire fighting systems,hazardous materials, flammables etc).

28. Data Book
The Contractor is to produce two Data Books in English which shall list products, supplies and other purchases by the yard for this refit listing supplier and contact information. This book shall also include the copies of the readings required for the completion of each specification item. The data book shall be 8 X 12" format and binded. The data book shall be indexed and tabbed in the same order as the refit specifications index. Contractor shall also provide 3 CD-ROM's of the data book. The CD ROM's and data books shall be provided to the Chief Engineer prior to the end of refit.

SHIP'S PARTICULARS

Length O.A. ---------- 88.0 Metres
Breadth MId. ---------- 17.1 Metres
Draft ---------- 7.40 Metres
Displacement ---------- 4234 MT
Power----------17,300 KW
Engines----------Stork -Werkspoor 8TM 410 (x 4)
Propulsion----------Diesel- Reducer Gearbox - CPP
Year built ---------- 1983

Spec item #: H-01	**SPECIFICATION**	TCMSB Field #: N/A
Production Chart		

H-01 Production Chart

Part 1: Scope

1.1 The intent is to provide a means for tracking the progress of the refit.

Part 2: References

N/A

Part 3: Technical Description

Production Chart

3.1 The successful Contractor shall supply three copies of a detailed bar chart showing the planned work schedule for the ship's refit. This bar chart shall show, for each specification item, the start date, the duration of work and the completion date. The chart is also to highlight any critical paths.

3.2 The production chart shall be updated weekly or for each production meeting to reflect the actual production on the refit and changes to the anticipated completion dates of each individual item.

3.3 The production chart shall clearly indicate the arrival/departure dates of any Subcontractors/Field Service Representatives.

3.4 The production chart shall include the status and production on each 1379 arising.

3.5 Three copies of the production chart shall be given to the Chief Engineer **the day prior** to each Production Meeting. A copy shall be emailed to the Project Authority (wayne.lambert@dfo-mpo.gc.ca) the day prior as well.

3.6 A copy of the original bar chart shall be provided via email to the PWGSC contracting Officer and Project Authority before the close of business on the day on the start date of the refit.

Subcontractors with Allowances

3.7 The Contractor shall provide a weekly update of the hours billed by the subcontractors along with their hourly rates.

3.8 The results shall be tabulated in an excel spreadsheet clearly indicating the Subcontractor, date(s), hours worked and hourly rate for the hours worked.

3.9 The update is to be emailed to Technical Authority, Contracting Officer and Project Authority the day prior to the weekly scheduled Progress Meeting.

Part 4: Proof of Performance

N/A

Part 5: Deliverables

5.1 Contractor shall provide a weekly production chart and excel spreadsheet for subcontractor allowances every week on the timelines indicated.

Spec item #: H-02	**SPECIFICATION**	TCMSB Field #: N/A
	Services	

Part 1: SCOPE:

1.1 The following services shall be supplied, fitted and / or connected upon arrival in the dry-dock, maintained throughout the dry-docking period and removed from the vessel on completion of the work period. The Contractor will be responsible for any additional connections required when the ship is moved between the dry-dock and alongside berth at the Contractor's facilities.

1.2 The services are required for the full refit / dry-dock period. Each item is to be priced separately.

Part 2: REFERENCES:

2.1 Guidance Drawings/Nameplate Data

2.2 Standards

2.2.1. The following Coast Guard Standards and or Technical Bulletins must be adhered to in the course of executing this specification. Copies of these standards and bulletins can be obtained from the CCG Technical Authority.

2.2.2. Canadian Coast Guard Fleet Safety Manual (DFO 5737)

2.2.3. Coast Guard ISM Confined Space Entry 7.D.9

2.2.4. Coast Guard ISM Hotwork procedures

2.2.5. Coast Guard ISM Fall Protection procedures

2.2.6. Canadian Coast Guard Welding Specifications for Ferrous Materials, Revision 4. (TP6151 E)

2.2.7. CWB CSA 47.1 latest revision Division I, II or III

2.2.8. SSPC-SPT

2.2.9. (a) TP 127E-TC Marine Safety Electrical Standards.

2.2.10. (b) IEEE Standard 45 - Recommended Practice for Electrical Installation on Shipboard.

2.3 Regulations

2.3.1. Canada Shipping Act

2.4 Owner Furnished Equipment

2.4.1. The contractor shall supply all materials, equipment, and parts required to perform the specified work unless otherwise stated.

Part 3: TECHNICAL DESCRIPTION:

3.1 General

3.1.1. The Contractor is to quote a global price and daily rates for all services supplied to the vessel during the dry-docking period.

READINGS AND REPORTS

3.1.2. Contractor shall collect and bind all readings and reports in a booklet form. Three (3) bound copies shall be delivered to the Chief Engineer at the end of the contracted refit period along with a CD-ROM or memory stick.

3.1.3. The Contractor shall also send an electronic copy (CD-ROM or memory stick) to the Technical Authority prior to the end of the refit period.

ELECTRICAL POWER

3.1.4. Shore power facilities are to be supplied to the ship using a single 400-amp source using the Contractor's cables and fittings. The ship requires 1 x 400 amp x 600 VAC x 60 Hz x 3-phase power source for connection to the ship's shore power transformer. The Contractor will quote on supplying 6000 kW-hours per day. The Contractor will quote per kW hour for adjustment purposes on actual amount consumed.

3.1.5. The meter readings are to be taken from the ship's shore power meter located on the main switchboard. The meter readings will be recorded by the Contractor and the Chief Engineer's designate at the time of connection and disconnection.

FIRE MAIN

3.1.6. Water shall be maintained to the vessel's fire main at a pressure of 550 kPa (80 psi) and be continuous 24 hours per day. The supply line shall be fitted with an isolating valve and a pressure-regulating valve (with pressure gauge) which will be located on the ship connected to the ship's international shore connection. Drains shall be fitted in the event of cold weather.

GANGWAYS

3.1.7. The Contractor will supply and erect 2 gangways, complete with safety nets, guardrails and adequate lighting to the satisfaction of the Commanding Officer. The main gangway will land on the aft deck, secondary gangway on the fore deck. The gangways are to be safe, well lit and structurally suitable for the passage of shipyard workers and ship's crew. The Contractor is to maintain the gangways in a safe condition throughout the duration of the dry-docking.

3.1.8. The ship's gangway will not be used during the refit / dry-dock period except with the approval of the Commanding Officer and at no liability to CCG.

3.1.9. Any movement of the gangways required by the Contractor will be at the expense of the Contractor.

INTERNET/PHONE

3.1.10. The Contractor shall provide unlimited high speed internet and phone service to the vessel for the duration of the refit period.

3.1.11. The service will be active 24 hours per day for the duration of the contract.

3.1.12. The Contractor will be responsible for giving notice for connection / disconnection of the telephones as required for any ship movements.

3.1.13. The Contractor will supply a listing of shipyard telephone numbers, fire, police and emergency telephone numbers to the Chief Engineer when the ship arrives in the Contractor's yard.

3.1.14. Long distance charges to be billed to:
Superintendent, Vessel Support
DFO, Canadian Coast Guard
PO Box 1035
Dartmouth, N.S.
B2Y 4T3
Attn: CCGS TERRY FOX

POTABLE FRESH WATER

3.1.15. The Contractor has completed the applicable paragraphs of the Safety Requirements before a connection to the vessel is made.

3.1.16. Potable water shall be supplied through a fresh water filling line (c/w reducing valve and pressure gauge) at the ship's fresh water connection located on the Main Deck (Frame 02) port or starboard side. Contractor to supply approximately 5 m^3 per day.

3.1.17. Contractor will also supply any fresh water and / or hot water required for the cleaning, testing or flushing of tanks as required by the Specification from a source separate from the ship's potable fresh water connection.

SEWAGE CONNECTION

3.1.18. Contractor to connect a 2.5" diameter connection pipe and hose to the sewage system overboard discharge, located between frames 112 & 113 starboard side. The discharge to be lead away from the ship's side to the Contractor's sewage outlet facilities. The connection to be removed on completion of docking.

3.1.19. Note: this connection to be made within 4 hours of ship dry-docking.

GARBAGE REMOVAL

3.1.20. A suitable garbage container *with cover* is to be provided for the duration of the refit. The garbage container shall be a minimum of 6 m^3 and is to be placed on the Main Deck aft in a location agreed upon by the Contractor and the Chief Officer.

3.1.21. The ship's garbage container shall be emptied at a minimum of every 3 to 4 days, more often if required by smell or capacity.

3.1.22. Garbage containers for use of the Contractor for disposal of debris etc. may be located on the Main Deck aft in locations agreed to by the Chief Officer. These containers shall be emptied on a regular basis.

BERTHING

3.1.23. The berthing and mooring facilities are to be suitable for a vessel of this size and are to be to the satisfaction of the Commanding Officer.

3.1.24. During the contract period, if the ship is not in the dry-dock, the ship is to be berthed at the Contractor's wharf at a safe and secure berth with adequate water at extreme low tide to ensure the vessel will not touch bottom.

3.1.25. The Contractor is responsible for all movements of the vessel during the contract period, including arrangements and costs for line handlers, tugs, pilot's etc.

CLEANING

3.1.26. The Contractor is to ensure all spaces, compartments and areas of the ship, external and internal, are left in an "as clean condition as found".

3.1.27. The cost of removing dirt, debris and cleaning up work areas to the "as clean a condition as found" shall be included in each specification item.

OILY BILGE WATER

3.1.28. The Contractor shall quote on removing 20 m^3 of oily-water from the ship's bilge's and tanks. The quotation is to include the cost of cranage, pumping, trucking and disposal of oily mixture. The Contractor is to provide the name of the firm contracted for the pumping and disposal of the waste oil.

3.1.29. Contractor will quote the cost of disposal of 1 m^3 for prorating purposes. The Contractor will advise the Chief Engineer when oily bilge water is to be pumped out and a copy of the shipping manifest, indicating the volume of oily-water removed, is to be given to the Chief Engineer.

CRANAGE

3.1.30. Contractor to bid on supplying general services of a dockside crane, driver and rigger for 20 hours during the dry-dock period as and when requested by the Chief Engineer. Contractor to quote an hourly rate for adjustment purposes.

3.2 Location

3.3 Interferences

3.3.1 Contractor is responsible for the identification of interference items, their temporary removal, storage and refitting to vessel.

Part 4: PROOF OF PERFORMANCE:

4.1 Inspection

All work shall be completed to the satisfaction of the Chief Engineer.

4.2 Testing

N/A

4.3 Certification

N/A

Part 5: DELIVERABLES:

5.1 Drawings/Reports

5.1.1 Copies of all readings and services provided shall be given to the Chief Engineer.

5.2 Spares

N/A

5.3 Training

N/A

5.4 Manuals

N/A

Spec item #: H-03	**SPECIFICATION**	TCMSB Field #: N/A
Dock & SeaTrials		

Part 1: SCOPE:

1.1 The intent of this specification is to have the Contractor onboard to perform a minimum of three hours dockside trials, and six hours of continuous sea trials.

1.2 The intention of the dock trials is to run up the affected machinery during the past refit (Shafting, Rudder, Stbd Propeller, etc,) to operating temperatures and pressures, check for abnormal vibrations and temperatures, record operating parameters from the main gearbox and main engine. The load is limited on the main engine while at the dock to ensure no damage to the shafting, propellers, rudders, etc, occurs.

1.3 The intention of the sea trial is to run for 4 hours at the maximum pitch permitted by the Chief Engineer.

Part 2: REFERENCES:

2.1 Guidance Drawings/Nameplate Data

2.1.1 N/A

2.2 **Standards**

2.2.1. The following Coast Guard Standards and or Technical Bulletins must be adhered to in the course of executing this specification. Copies of these standards and bulletins can be obtained from the CCG Technical Authority.

2.2.2. Canadian Coast Guard Fleet Safety Manual (DFO 5737)

2.2.3. Coast Guard ISM Confined Space Entry 7.D.9

2.2.4. Coast Guard ISM Hotwork procedures

2.2.5. Coast Guard ISM Fall Protection procedures

2.2.6. Canadian Coast Guard Welding Specifications for Ferrous Materials, Revision 4. (TP6151 E)

2.2.7. CWB CSA 47.1 latest revision Division I, II or III

2.2.8. SSPC-SPT

2.2.9. (a) TP 127E-TC Marine Safety Electrical Standards.

2.2.10. (b) IEEE Standard 45 - Recommended Practice for Electrical Installation on Shipboard.

2.3 **Regulations**

2.3.1. Canada Shipping Act

2.4 **Owner Furnished Equipment**

2.4.1 The Contractor shall supply all materials, equipment, labor, and parts to perform the specified work unless stated otherwise.

Part 3: TECHNICAL DESCRIPTION:

3.1 General

3.1.1 On completion of all specification items and after the vessel has been undocked, dock trials shall be carried out at the contractor's facility. Note, Coast Guard shall provide the date as to when the vessels crew shall return to vessel to assume care and custody and be available for conducting trials.

3.1.2 The vessel shall be given 36 hours to run up the vessel after it has been undocked before trials begin.

3.1.3 The Contractor shall ensure there are sufficient personnel (4) onboard to attend to/repair any faults directly related to the equipment worked on by the Contractor during the refit. Contractor is to provide the respective personnel to conduct Q/A acceptance in accordance with their approved Quality Assurance program.

3.1.4 The Contractor shall ensure the workers available perform dock trials with the amount of pitch, ahead, astern movements being limited to what the Owner's Representative feels is a safe level. This shall be performed for four hours to allow everything to rise to operating temperatures and settle out. Once this is deemed to be satisfactory by the Chief Engineer and ABS Inspector, the sea trials shall be scheduled.

3.1.5 Sea trials shall be scheduled for six hours and the contractor shall ensure there are sufficient workers available to attend to any repairs required to affected machinery.

3.1.6 The 1205 Acceptance document shall not be signed by the Chief Engineer until the Sea Trials have been successfully completed to the satisfaction of the Chief Engineer.

3.2.1 Location

3.3 Interferences

3.3.1 The contractor shall be responsible for the identification of all interference items, their temporary removal, storage, and refitting to the vessel.

Part 4: PROOF OF PERFORMANCE:

4.1 Inspection

4.1.1 All work shall be completed to the satisfaction of the Chief Engineer and ABS Surveyor.

4.2 Testing

4.2.1 These sea trials are to prove the integrity of all the machinery / systems worked on by the Contractor during the past refit, and shall be included in the reports delivered to the Chief Engineer.

4.3 Certification

4.3.1 N/A

Part 5: DELIVERABLES:

5.1 Drawings/Reports

5.1.1 The operating condition of the equipment worked on shall be included in the three copies of the work reports in electronic format from the Contractor to the Chief Engineer at the end of refit.

5.2.1 Training N/A

5.3.1 Manuals N/A

Spec item #: H-04	**SPECIFICATION**	TCMSB Field #: N/A
Freshwater Tank Maintenance		

Part 1: SCOPE:

1.1 The intent of this specification shall be to open up the two freshwater tanks for cleaning, inspection and testing. The tanks are currently coated with Royal Coatings. The Royal Coating System in the 100 ton DB tank is flaking excessively.

1.2 Coast Guard will provide a NACE inspector for the coating work of this specification. The Royal Coating FSR shall be on site to recommend the preparation method for the 100 ton tank coating repair.

1.3 This work shall be carried out in Conjunction with the following:

Part 2: REFERENCES:

2.1 Guidance Drawings/Nameplate Data

2.1.1. Tank Capacity Plan Drawing # T131027
2.1.2. Potable Freshwater Internal Tank – Volume -42 m^3, Surface Area 150 M^2
2.1.3. Freshwater Tank # 6 DB Center –Volume - 108 m^3, Surface Area 550 M^2
2.1.4. Royal Coating Spec Sheets

2.2 Standards

2.2.1. The following Coast Guard Standards and or Technical Bulletins must be adhered to in the course of executing this specification. Copies of these standards and bulletins can be obtained from the CCG Technical Authority.
2.2.2. Canadian Coast Guard Fleet Safety Manual (DFO 5737)
2.2.3. Fleet Safety Manual 7.A.12 Potable Water Quality
2.2.4. CCG Operational Safety Bulletin OSB 02-2020 Update 7.A.12
2.2.5. Coast Guard ISM Confined Space Entry 7.D.9
2.2.6. Coast Guard ISM Hotwork procedures
2.2.7. Coast Guard ISM Fall Protection procedures
2.2.8. Canadian Coast Guard Welding Specifications for Ferrous Materials, Revision 4. (TP6151 E)
2.2.9. CWB CSA 47.1 latest revision Division I, II or III
2.2.10. SSPC-SPT

2.3 Regulations

2.3.1. Canada Shipping Act.

2.4 Owner Furnished Equipment

2.4.1. The contractor shall supply all materials, equipment, and parts required to perform the specified work unless otherwise stated.

Part 3: TECHNICAL DESCRIPTION:

3.1 General

3.1.1. The following work shall commence as early as possible in the contractor's work schedule.

3.1.2. The tanks shall be pumped as low as possible by ship's staff. Contractor shall be responsible for pumping out remainder of tank as required to perform this work.

3.1.3. The contractor shall provide each tank with effective mechanical systems to meet environmental conditions for the surface preparation and coating application. The contractor shall prove the tanks are safe for personnel to enter prior to commencing work in each tank.

3.1.4. There are two (2) manhole covers for access to # 6 DB center tank, one manhole for access to main potable water tank. Contractor shall open all manhole covers for access for water / mechanical cleaning and painting purposes. On completion of all work, manhole covers shall be installed using new ¼" neoprene gaskets (CFM).

3.1.5. Prior to entry into tank, the tank shall be certified safe for entry and hotwork.

3.1.6. During tank cleaning and painting operations, Contractor shall provide protection to any internally mounted tank level transducers. Before closing up tanks, the Chief Engineer will confirm condition of tank level transducers.

3.1.7. The tanks shall be hydro blasted and chemically cleaned to remove rust discoloration, mud, scale and loose paint. All water and debris shall be removed from the tank. There are no docking plugs in these tanks and water accumulated from pressure washing must be pumped out using Contractor supplied equipment. The chemical used shall be approved by the Provincial Health Services for its intended application. Proof of such approval shall be furnished to the Chief Officer before work begins.

3.1.8. Tank surfaces shall be thoroughly dried before mechanical cleaning and painting.

Coating

3.1.9. The surface preparation and coating shall be applied as per attached Royal Coating Specification for Freshwater Tanks. The three stage coating system consists of EasyPrep, EasyPrime, and EasyFlex.

3.1.10. The contractor shall provide an enclosure on the outer shell of the ship's hull IWO # 6 DB Freshwater tank frames 27 to 9, 2.5 meters port and starboard of centerline.

3.1.11. Contractor shall supply all ventilation and dehumidification equipment to ensure the complete drying coatings, and to protect against condensation and humidity.

3.1.12. The contractor shall provide two separate quotations for the surface preparation of the 100 ton tank. This shall be determined by the Coating FSR.

1. Method One: The 100 ton tank shall be swept abrasive blast the entire internals of the tank to remove loose damaged coatings and provide the remaining surfaces with an anchor profile suitable for the Royal Coating System.
2. Method Two: The 100 Ton Tank shall power tool the entire internals of the tank to remove loose damaged coatings and provide an anchor profile suitable for the Royal Coating System.

3.1.13. The 100 ton tank is fitted with two manhole covers, frame 26 and frame 10.

3.1.14. The tank shall be thoroughly cleaned to remove all debris from the tank.

3.1.15. The three stage Royal Coating System shall be applied to the entire internal surfaces of the 100 ton tank. The NACE inspector shall ensure coatings are applied as per manufacturers specifications.

3.1.16. The contractor shall quote on repairing 5 m^2 of coating for the 40 ton tank. Quote shall include unit cost per m^2 for the repair and shall be used for adjustment by 1379 for the total area to be repaired. The above quote shall include surface preparation and coatings. Before coating begins the contractor and Chief Officer will inspect the tanks to agree on the total area involved.

3.1.17. The contractor shall perform all coating repairs in strict accordance with Royal Coating Instructions.

3.1.18. IMPORTANT NOTE: The NACE Inspector will supervise and advise on the entire coating process, including proper coating type, coating dry- film thickness, proper preparation and application environment and procedures, and drying time to complete cure. The contractor shall obtain copies of the following information sheets for the paint or coating product system selected and provides copies to the local CCG representative for inclusion in the Contract file.
Working Procedures;
Product data sheets; and
Material Safety Data (MSD) sheets

3.1.19. On completion of the surface preparation and before the first coat of paint or coating product has been applied, the contractor shall provide the crown with a statement certifying that the surface preparation was completed in accordance with the Manufacturer's instructions. Any deviations to those instructions shall be noted in the certified statement.

3.1.20. Ambient air temperature of the tank shall be constantly monitored during the application and curing period using an electronic data recorder. Temperatures shall be recorded hourly, and printouts submitted as part of the contract deliverables.

3.1.21. Paint application shall not take place when the metal temperature is less than 3 Degrees Celsius above the dew point.

3.1.22. The following information shall also be recorded and submitted as part of the contract deliverables:
Space Temperature and relative humidity level in the tank – before work is started;
The tank shall be allowed to remain stagnant for 48 hours before samples are taken;
Two (2) water samples shall be collected from inside the tank. Sampling means shall be provided.
Two (2) air samples shall be collected from inside the tank;
One (1) blank air sample shall be collected from somewhere outside the tank;
Once samples have been taken, the tank shall be purged and left empty until results are received; and
The air and water samples listed above shall be sent to an accredited laboratory for analysis
The Contractor shall have the air samples, identified above, tested for VOCs
The Contractor shall have the water samples, identified above, tested for:
All parameters identified in paragraph 3.6.7 section 7.F.12 of the fleet Safety Manual;
1-2-4 Trimethylbenzene – 0 ug/L limit;
Diglycidyl ether – 0 ug/L limit;
Expoxypropyl ether – 0 ug/L limit;
Other identified chemicals of concern, based on the MSD sheets.

3.1.23. Contractor shall arrange for services of a Marine Chemist to monitor and record VOC levels in tank atmospheres during cure period.

3.1.24. After paint has fully cured, tanks shall be super-chlorinated with bleach and circulated to a level of 50 mg/L of free chlorine for disinfection and let sit for 4 hours. Contractor shall supply Chief Engineer with calculations used to determine strength of chlorine solution used and number of containers used.

3.1.25. The super-chlorinated water must then be de-chlorinated to a free chlorine level below 0.1 mg/L as per the requirements of the CCG Fleet Safety Manual section **7.F.12**.***POTABLE WATER QUALITY***. paragraph 3.5 inclusive. Tanks shall be drained by Contractor again to remove all traces of the sterilizing agent.

3.1.26. **Note:** Contractor shall take three (3) separate water tests while pumping out the de-chlorinated water. NOTE: to ensure the mixture is properly de-chlorinated, the mixture shall be thoroughly circulated.

3.1.27. Tanks shall be filled and pumped out twice more. Contractor shall ensure that all hoses and pumps used during this operation are for fresh water use only. A certificate stating this requirement must be given to the Chief Engineer.

3.1.28. After the tank flushing and refilling has been completed and the tank filled again, and let set for 24 hours. Contractor shall arrange to have samples of the water in each tank tested by a laboratory. Tests shall include those for Coliform, E.Coli, and Volatile Organic Compounds. The water sample reports shall be delivered to the Chief Engineer. The water from the tanks shall not be used for ships consumption until receipt of acceptable drinking water certificates.

3.1.29. A report of the super-chlorination and de-chlorination calculations and tests shall be given to the Chief Engineer.

3.1.30. The contractor shall perform hydrostatic test on each of the tanks for ABS. This can be done in conjunction with the chlorination process of the spec item. The vent heads shall be removed for the test and replaced with new gasket when completed.

3.2 Location

3.2.1. Freshwater Tank 40 ton Frames 9 – 25

3.2.2. Freshwater Tank #6 DB Center Frames 9 - 27

3.3 Interferences

3.3.1 Contractor is responsible for the identification of interference items, their temporary removal, storage and refitting to vessel.

Part 4: PROOF OF PERFORMANCE:

4.1 Inspection

4.1.1. All work shall be completed to the satisfaction of the Chief Engineer.

4.2 Testing

As per Fleet Safety Manual

Note: Technical and testing requirements:

- that the paint chosen for use to coat or patch a tank be a 100% solids, VOC free, product that is certified to NSF-61
- that the application of the coating system must be specified to be in accordance with paint manufacturer's recommendations.
- that all new equipment be specified to be used in the application of the coating
- that the contractor is to require that anyone entering the tanks takes precautions to ensure they do not contaminate the tanks
- that the contractor is to schedule an early start to the preparation and coating work to allow sufficient time for the coating to cure
- that an independent third party NACE certified inspector (with a minimum certification of Coating Inspector Program Level 2) be engaged to verify the work throughout the process and that the specification requires the contractor to provide the NACE inspector access to conduct inspections.
- that a baseline 28 parameter water quality test is to be performed per Section 7.A.12 of the Fleet Safety Manual following super chlorination.
- that another 28 parameter test be done at least 3 days following the baseline test with the water in the tank having remained stagnant between tests.

4.3 Certification

All water Analysis required by the specified work.

Part 5: DELIVERABLES:

5.1 Drawings/Reports

5.1.1 The Contractor shall provide 3 copies of the item as found, all the work performed and as completed in electronic Format to the Chief Engineer.

5.2 Spares

N/A

5.3 Training

N/A

5.4 Manuals

N/A

Spec item #: H-05	**SPECIFICATION**	TCMSB Field #: N/A
Anchors and Cable Inspection		

Part 1: SCOPE:

1.1 The intent of this specification shall be to perform maintenance, inspection, and rotate bitter ends of the port and starboard anchors and chain.

1.2 This work shall be carried out in Conjunction with the following:

- Chain Locker Maintenance

Part 2: REFERENCES:

2.1 Guidance Drawings/Nameplate Data

2.1.5. Anchor Weight 3.5 metric tons
2.1.6. Chain length 15 shots per side
2.1.7. One shot of chain weight is 1.3 metric tons
2.1.8. Anchor chain diameter is 46 mm.

2.2 Standards

2.1 Standards

2.2.1. The following Coast Guard Standards and or Technical Bulletins must be adhered to in the course of executing this specification. Copies of these standards and bulletins can be obtained from the CCG Technical Authority.
2.2.2. Canadian Coast Guard Fleet Safety Manual (DFO 5737)
2.2.3. Coast Guard ISM Confined Space Entry 7.D.9
2.2.4. Coast Guard ISM Hotwork procedures
2.2.5. Coast Guard ISM Fall Protection procedures
2.2.6. Canadian Coast Guard Welding Specifications for Ferrous Materials, Revision 4. (TP6151 E)
2.2.7. CWB CSA 47.1 latest revision Division I, II or III
2.2.8. SSPC-SPT
2.2.9. (a) TP 127E-TC Marine Safety Electrical Standards.

2.2.10. (b) IEEE Standard 45 - Recommended Practice for Electrical Installation on Shipboard.

2.2 Regulations

2.3.1. Canada Shipping Act

2.3 Owner Furnished Equipment

2.3.1 The contractor shall supply all materials, equipment, and parts required to perform the specified work unless otherwise stated.

Part 3: TECHNICAL DESCRIPTION:

3.1 General

3.1.1. Contractor shall lower the port and starboard anchors and chains to the dock floor. The chains shall be ranged on the dock floor using Contractor's lifting equipment and suitably supported to allow for high pressure water washing. The initial lowering of the anchors & chains to the dock floor and the final stowing of anchors & chains is done using the ship's windlass operated by ship's crew. Contractor is to advise the Chief Engineer 24 hours in advance of either operation to ensure ship's personnel are available.

3.1.2. Work on this specification item to be carried out in conjunction with H – 06 including the requirement for a marine chemist's certificate for confined space entry and hotwork.

3.1.3. Contractor to high-pressure fresh water wash (approx. 5000 psi) anchors and chains to remove all sand, mud and marine growth.

3.1.4. The chains are to be inspected by the Chief Engineer's designate prior to painting. All links are to be inspected and slack studs or missing lead pellets identified and reported to Chief Officer. Repairs to six (6) slack studs to be shown as a separate cost.

3.1.5. Anchor swivels shall be replaced with new CG Supplied swivels. Anchor shanks shall be rotated on anchor connecting pins in crowns to prove freedom of motion – approx. 35° either side of vertical.

3.1.6. Contractor to quote separately on the following work: both anchor chains to be let go at the bitter end flanges. Each bitter end flange is located directly under a warping head. Once the bitter end flanges are unbolted, the windlass can be used to lift up on the bitter ends and secure for unbolting of chains. The first 2 shots of the port and starboard chains (anchor ends) are to be disconnected and rotated to the position of the last shots (bitter ends). The free ends are to re-connected to anchors with babbitt pellets. Center shackle pins are to be sealed, chains secured at the bitter ends and bitter end flanges bolted in place using a 3 mm neoprene gasket at each location.

3.1.7. Note: the requirement to carry out this work will be decided by Coast Guard after the chain inspection.

3.1.8. Before painting the joining shackles, the anchor chains are to be grit swept to remove surface rust. The anchor chain shall have the diameter of several links measured and recorded. Measure 10 links per shot of chain on port and starboard systems. The joining shackles are to be painted with 2 coats of red paint with equal numbers of white painted links on either side. The number of white painted links are to correspond with the number of shots of chain paid out beginning from the anchor-joining shackle. The outer links of each white-painted set are to be marked by stainless steel seizing wire close-hitched around the link stud.

3.1.9. The anchors are to be grit swept to remove surface rust. Contractor to apply 2 coats of black paint to each anchor.

3.1.10. Paint coatings shall be Amercoat 5450 high gloss alkyd. Primer shall be Amercoat 5105 Alkyd Primer.

3.1.11. On completion of above work, cables and anchors to be re-shipped using ship's windlass.

3.1.12. Note: before ship's windlass is used, Chief Officer will be advised and all grit blasting debris will have been removed from the windlass' exposed gears by the contractor.

3.2 Location

3.2.1. Forward Foc'sle Deck

3.3 Interferences

3.3.1 Contractor is responsible for the identification of all interference items, their temporary removal, storage and refitting to vessel.

Part 4: PROOF OF PERFORMANCE:

4.1 Inspection

4.1.1. All work shall be completed to the satisfaction of the Chief Engineer.

4.2 Testing

N/A

4.3 Certification

N/A

Part 5: DELIVERABLES:

5.1 Drawings/Reports

5.1.1 The Contractor shall provide 3 copies in Electronic Format of all work completed with this Spec item.

5.2 Spares N/A

5.3 Training N/A

5.4 Manuals N/A

Spec item #: H-06	**SPECIFICATION**	TCMSB Field #: N/A
Above Waterline Hull Coating and CCG Idenity		

Part 1: SCOPE:

1.1 The intent of this specification shall be to sweep blast the damaged coating areas above waterline hull, repair and apply coatings, including the draft marks and Coast Guard identity as described below. The Hull below the 10m draft line shall be black.

1.2 This work shall be carried out in Conjunction with the following:

- Underwater Hull Coating

Part 2: REFERENCES:

2.1 Guidance Drawings/Nameplate Data

2.1.1. Shell Expansion
2.1.2. CCG Identity Program Drawings

2.2 **Standards**

2.2.1. The following Coast Guard Standards and or Technical Bulletins must be adhered to in the course of executing this specification. Copies of these standards and bulletins can be obtained from the CCG Technical Authority.
2.2.2. Canadian Coast Guard Fleet Safety Manual (DFO 5737)
2.2.3. Coast Guard ISM Confined Space Entry 7.D.9
2.2.4. Coast Guard ISM Hotwork procedures
2.2.5. Coast Guard ISM Fall Protection procedures
2.2.6. Canadian Coast Guard Welding Specifications for Ferrous Materials, Revision 4. (TP6151 E)
2.2.7. CWB CSA 47.1 latest revision Division I, II or III
2.2.8. SSPC-SPT
2.2.9. (a) TP 127E-TC Marine Safety Electrical Standards.

2.2.10. (b) IEEE Standard 45 - Recommended Practice for Electrical Installation on Shipboard.

2.3 Regulations

2.3.1. Canada Shipping Act

2.4 **Owner Furnished Equipment**

2.4.1. The contractor shall supply all materials, equipment, and parts required to perform the specified work unless otherwise stated.

Part 3: TECHNICAL DESCRIPTION:

3.1 General

3.1.1. The Contractor shall abrasive blast clean to Commercial Blast Cleaning SSPC-SP 6 (NACE #3) to damaged areas on above waterline hull area. Lightly Brush-Off Blast one (1) meter below the top edge of the INERTA coating to obtain an anchor profile for the above waterline coating to adhere. All areas from 10 m above baseline to bulwarks or exterior deck level, as applicable, are to be dealt with:

- Stern roller to frame 65 – 10 m to top of bulwarks (including stern roller)
- Frame 65 – 123: 10m – 13.5 m (up to Foc'sle Deck)
- Frame 123 – Stem: 10m – 14.5 m (to top of bulwarks)
- All measures taken to prevent undesirable ingress of blast grit into ships openings, machinery and equipment. The contractor shall plug deck scuppers and discharges as well as take other measures necessary to prevent any liquids from contaminating areas being prepared or coated. The contractor shall also take measures to ensure that no damage, unnecessary cleaning, or any repairs result from either the hull preparation process or coating application. Measures shall be taken to ensure that surfaces and equipment, other than those specified, are not coated and that the coating shall not block any inlets or discharges in the shell. Deck machinery and other gear shall be protected from damage by grit and coatings.

3.1.2. The total area involved for painting is approximately 500 m^2 (5382 ft^2).

Anchor Pockets

3.1.3. The anchor pockets shall be completely abrasive blasted to SSPC-SP6 Commercial Blast. The contractor shall quote on 10 M^2 for each pocket. The contractor shall apply two coats of International Intergard 264 Abrasion Resistant Epoxy at 5-6 mils DFT per coat with sufficient feathering, color grey for first coat. Apply the final coat with International Intergard 264 Abrasion Resistant Epoxy at 5-6 mils color Black.

Surface Preparation

3.1.4. Abrasive Blast the damaged coating areas as describe in section 3.1.1 to SSPC-SP-6 Commercial Blast Coating and feathered back to intact coating. Quote 50M^2 for damaged areas and include unit cost for 1 M^2 to be adjusted up or down by 1379. Cost of damaged areas shall include the primer coating back to the feathering.

Primer

3.1.5. Apply two coats of International Interprime 234 to damaged areas with contrasting colors. Apply @ 2 to 3 mils DFT per coat. First Coat shall be off-white and second coat shall be red.

Topcoat

3.1.6. Apply two full coats of International Interlac 665 to the entire above waterline area. Apply @ 40 microns DFT per coat. Colour Coast Guard Red .

3.1.7. Contractor to paint hull markings as per Coast Guard supplied drawings for Identity Program.

3.1.8. Coast Guard hull markings, including logos, ship's name, stripes, port of registry and all other hull markings are to be painted with 2 coats of International Interlac 665 white paint. CCG will supply stencils as required.

3.1.9. The interface with the under water hull coating and the above waterline hull coat line shall be coated with a 300mm overlap of above water line hull coating.

3.1.10. All coatings shall be in strict accordance with manufacturers application instructions.

3.1.11. After completion of work all protective covers, plugs etc. are to be removed and stencils are to be returned to Chief Officer.

3.1.12. Man-lift and or scaffolding shall be made available to CCG representative to witness all thickness readings.

3.2 Location

3.2.1. Exterior Hull Above Water Line

3.3 Interferences

3.3.1 Contractor is responsible for the identification of interference items, their temporary removal, storage and refitting to vessel.

Part 4: PROOF OF PERFORMANCE:

4.1 Inspection

4.1.1. All work shall be completed to the satisfaction of the Chief Engineer and Chief Officer

4.1.2.

4.2 Testing

The contractor shall provide DFT readings to the owners representative following each coat. The owners representative shall witness the readings as they are taken. In conjunction with any functional quality assurance procedure, the following points will be carried out:

- Provide a list of batch numbers with corresponding dates of manufacture.
- Record the quantity and type of any solvent added.
- Measure and record the ambient conditions.
- Record details of spray tips and pressures.
- WFT guage readings to be taken on a regular basis during application.

- Using a calibrated DFT guage, fifteen (15) measurements per 100 square ft. are to be taken and recorded. Upon agreement of consistency with the Chief Engineer, fifteen (15) measurements per 1000 square ft. are to be taken and recorded.
- All recorded information is to be typewritten and three (3) copies are to be given to the Chief Engineer.

4.3 Certification

N/A

Part 5: DELIVERABLES:

5.1 Drawings/Reports

5.1.1 The Contractor shall provide 3 copies in Electronic Format of all work completed with this Spec item.

5.2 Spares

N/A

5.3 Training

N/A

5.4 Manuals

N/A

Spec item #: H-07	**SPECIFICATION**	TCMSB Field #: N/A
Fixed Fire Fighting Systems Inspection		

Part 1: SCOPE:

1.1 Contractor shall arrange for inspection, testing and recertification of all ship's fixed and portable fire extinguishing systems, as described and listed below, by an authorized service provider. Proof of credentials and certification of service provider shall be made available to Chief Officer.

Part 2: REFERENCES:

2.1 Guidance Drawings/Nameplate Data

2.1.9. N/A

2.2 Standards

2.2.1. The following Coast Guard Standards and or Technical Bulletins must be adhered to in the course of executing this specification. Copies of these standards and bulletins can be obtained from the CCG Technical Authority.

2.2.2. Canadian Coast Guard Fleet Safety Manual (DFO 5737)

2.3 Regulations

2.3.1. Canada Shipping Act

2.4 Owner Furnished Equipment

2.4.1. The contractor shall supply all materials, equipment, and parts required to perform the specified work unless otherwise stated.

Part 3: TECHNICAL DESCRIPTION:

3.1 General

3.1.1. Contractor shall have an allowance of $10000 for the services of a certified technician to inspect and provide inspection certificates for all items listed, to be adjusted up or down via 1379 action upon proof of invoices.

3.1.2. No components or parts shall be replaced without the prior consent of the Chief Officer. Any parts replaced shall be turned over to Chief Officer. Inspection and testing of all equipment shall be witnessed by a senior ship's Officer.

3.1.3. All certificates and service reports issued by the Contractor for this work must refer to each serviced component's serial number and location on the vessel. The inspection and certification is to be conducted in accordance with the manufacturer's standards, with the following work requirements to be addressed as part of, or as supplementary, to the standards.

Notifier Systems

3.1.4. The vessels equipped Notifier AM 2020 Fire Alarm system shall be thoroughly examined by a qualified technician and inspection certificates issued. The service provider must be certified by Notifier for this inspection activity and must produce the documentation for verification. The inspection and testing is to be witnessed by a Senior Officer.

3.1.5. All smoke and heat detectors are to be verified and tested.

3.1.6. All bell circuits, pull stations, relays, monitors are to be verified and tested.

3.1.7. The panels and alarm functions are to be inspected and tested and all zones inspected.

FM-200 System

3.1.8. Eight (8) independent, Kidde fixed FM-200 fire extinguishing systems shall be thoroughly examined by qualified technicians and inspection certificates issued. Systems shall be inspected to current TCMSB standards and as per current Kidde FM-200 marine maintenance manuals for "ECS Series" and "ADS Series" FM-200 systems. Service provider must be currently certified by Kidde for this inspection service and must produce documentation to verify same.

3.1.9. The following nine cylinders are to be removed from the vessel and sent to an approved testing facility to be hydrostatically tested. Certificates are to be provided to the Chief Engineer. The cylinders are to be refilled and returned to the ship, installed in place, and hooked up.

- 1 x 50 lb dry chemical wheeled unit, winch room muster station
- 2 x FM 200 – 600 lb cylinders ECS, Lower Fwd Machinery Spaces
- 1 x FM 200 – 600 lb cylinder ECS, Main Engine Control Room
- 1 x FM 200 – 600 lb cylinder ECS, Main Engine Room Bilge Port
- 1 x FM 200 – 600 lb cylinder ECS, Main Engine Room Bilge Stbd
- 2 x FM 200 – 600 lb cylinder ECS, Main Upper engine Room
- 1 x FM 200 – 395 lb cylinder ECS, Exhaust Stack Stbd

3.1.10. All manual and electric pull cables shall be inspected and tested.

3.1.11. All gas piping shall be inspected, blown through, proven clear and pressure tested.

3.1.12. All sirens, horns and bells shall be inspected and tested.

3.1.13. All gas cylinders shall be weighed and Net weight determined and recorded.

3.1.14. All time delay functions shall be tested and proven correct.

3.1.15. All pressure activated switches for fire alarm initiation shall be tested.

3.1.16. All pressure activated switches for shutdown functions shall be tested.

3.1.17. Contractor to visually inspect all FM200 bottles at deck level for possible excessive amounts of corrosion or rust accumulation of exterior of bottles. Chief Engineer shall be advised immediately if any problems are found.

3.1.18. System shall be properly reassembled in good working order. All cylinders shall be firmly secured in their respective mountings. Three (3) typewritten copies Inspection certificates shall be submitted to the TA and the Chief Engineer.

3.1.19. Final inspection of completed work shall be undertaken by Contractor's charge hand in the presence of the designated ship's Officer. All work shall be to the satisfaction of the Chief Officer and TCMSB.

3.1.20. No system shall be left non-functional over a week-end period.

Galley Fire Suppression System

3.1.21. The Kidde RANGE GUARD MODEL RG - 2.5G c/w 2.21 gal. Karboly fire suppression system shall be serviced and tested and inspected in accordance with Kidde Wet Chemical Fire Systems manual, 2006. Service provider must be Kidde certified.

3.1.22. Contractor shall test and prove clear the piping and nozzles and ensure there are no foreign materials in the piping system that could prevent these systems from working correctly. All piping support brackets shall be verified in place and correctly fastened.

3.1.23. Contractor shall inspect cylinder, cylinder valve and control head assembly. Cylinder should not show evidence of corrosion or damage. Cylinder charge shall be determined and verified correct. All functions and adjustments of control head shall be verified correct.

3.1.24. Remote manual release pull station and actuating cable shall be proven functional.

3.1.25. All fusible links (three of 360°) must be renewed with new links with the correct temperature rating.

3.1.26. All system control functions must be proven functional such as Fan shut down, range and fryer shut down, alarm initiation etc.

3.1.27. The system shall be returned to working order.

Gaylord Ventilator

3.1.28. Galley Temperature sensing device for Gaylord Ventilator system shall be tested and proven functional.

3.1.29. Temperature actuated ventilator damper shutdown and alarm function shall be tested and proven functional.

Paint Locker CO2 System

3.1.30. Paint locker cabinets are fitted with an independent 25 lb CO2 flooding system with local, manual release. This system shall be inspected similarly to all others.

3.1.31. Bottle and head shall be inspected, bottle charge shall be confirmed, all discharge piping and nozzles shall be proven clear.

3.2 Interferences

3.2.1 Contractor is responsible for the identification of interference items, their temporary removal, storage and refitting to vessel.

Part 4: PROOF OF PERFORMANCE:

4.1 Inspection

4.1.1. All work shall be completed to the satisfaction of the Chief Engineer and ABS.

4.2 Testing

4.2.1 Bottles tested shall have Certificates provided.

4.3 Certification

4.3.1 Proof of Certification shall be provided**.**

Part 5: DELIVERABLES:

5.1 Drawings/Reports

5.1.1 Contractor is to provide service reports for all inspected systems identifying defects discovered and rectified. Certificates are to be provided for all systems.

5.2 Spares

5.3 Training

5.4 Manuals

Spec item #: H-08	**SPECIFICATION**	TCMSB Field #: N/A
Lifeboat and Davit Annual Inspection		

Part 1: SCOPE:

1.1 The intent of this specification shall be for the contractor to supply the services of a Palfinger Marine Representative to carry out annual inspection on the vessel's Lifeboat and Lifeboat Davit in accordance with Palfinger Marine procedures and checklists.

1.2 This work shall be carried out in conjunction with the following:

Annual Inspection, Starboard Miranda Davit.

Part 2: References:

2.1 Guidance Drawings/Nameplate Data

2.2 Standards

2.2.1. The following Coast Guard Standards and or Technical Bulletins must be adhered to in the course of executing this specification. Copies of these standards and bulletins can be obtained from the CCG Technical Authority.

2.2.2. Canadian Coast Guard Fleet Safety Manual (DFO 5737)

2.2.3. Coast Guard ISM Confined Space Entry 7.D.9

2.2.4. Coast Guard ISM Hotwork procedures

2.2.5. Coast Guard ISM Fall Protection procedures

2.2.6. Canadian Coast Guard Welding Specifications for Ferrous Materials, Revision 4. (TP6151 E)

2.2.7. CWB CSA 47.1 latest revision Division I, II or III

2.2.8. SSPC-SPT

2.2.9. (a) TP 127E-TC Marine Safety Electrical Standards.

2.2.10. (b) IEEE Standard 45 - Recommended Practice for Electrical Installation on Shipboard

2.3 Regulations

2.3.1 Canada Shipping Act.

2.4 Owner Furnished Equipment

2.4.1 The contractor shall supply all materials, equipment, labour and parts required to perform the specified work unless otherwise stated.

Part 3: Technical Description:

3.1 General

3.1.1. The contractor shall supply the services of a Palfinger Marine representative to supervise annual inspection on the Lifeboat and Davit in accordance with Palfinger Marine procedures and checklists. Summary inspection of key components to be carried out as quickly as possible to identify critical path, and possible purchase of long-lead items.

3.1.2 Contact information for the FSR: ryan.fagan@palfingermarine.com

3.1.3 The Contractor shall inform Chief Engineer of testing and inspecting times.

3.1.4 The Lifeboat Davit shall be locked out by ship's Electrical Officer.

3.1.5 Contractor shall inspect for damage to the Fibreglass reinforced laminate (FRP) both inside and out. All hull penetrations and steering mechanisms shall be inspected for wear and correct operation.

3.1.6 Contractor shall drain oil from the winch gear case and remove gear case cover. Contractor shall inform the Chief Engineer if there is any water content showing in the used oil. Contractor shall inspect the gear case for wear and damage. Contractor shall measure and record all backlash on all internal gears. Contractor shall remove winch from bedding for blast inspection and Thickness Measurements. Bedding shall be primed with 2 coats Marine GRADE primer and winch re-installed with contractor supplied fasteners.

3.1.7 Contractor shall prove that the gear case vent is free and clear and functioning properly to prevent internal pressure. Contractor shall flush the gear case with new oil until all residue water and dirt is removed. Contractor shall fit the gear case oil drain plug with pipe sealant and fill the gear case to the correct operating level with ship supplied oil. Contractor shall replace the gear case cover with a new gasket. Oil shall be vessel supply.

3.1.8 Contractor shall dismantle the winch brake assemblies to gauge wear and check for signs of heat. This will include dismounting the manual hand brake and centrifugal brake assembly from its shaft. Brake linings and centrifugal brake pads shall be inspected for wear and damage. Brake lining retaining screws shall be inspected. Centrifugal brake springs shall be inspected for wear and damage. Wear measurements of the brake linings shall be recorded and compared to manufactures specifications, if measurements are below specifications Contractor shall renew brake linings.

3.1.9 Contractor shall clean all parts including any brake dust from brake housing. Contractor shall de-glaze the running contact surfaces of the centrifugal brake drum housing and the hand brake inner cone clutch by machining them true. Contractor shall check with the manufacturer to obtain the minimum rotor thickness tolerance.

3.1.10 Contractor shall re-assemble brake assemblies using Loctite on the all brake lining securing screws. After re-assembly the breaks shall be adjusted to correct setting. Davit shall be lowered under load to test operation of the brakes after all work on davit completed.

3.1.11 Any replacement parts will be Owner-supplied.

3.2 Location

3.2.1. The Lifeboat and Davit are located on the starboard side of the Foscle deck.

3.3 Interferences

3.3.1. Contractor is responsible for the identification of interference items, their temporary removal, storage and refitting to vessel.

Part 4: Proof of Performance

4.1 Inspection

4.1.1. All work shall be completed to the satisfaction of the Chief Engineer and ABS.

4.2 Testing

4.2.1. Davits are to be functionally tested in accordance with Palfinger Marine procedures and checklists.

4.3 Certification

4.3.1. Instruments or accessories required to perform testing of davits shall be certified and calibrated (i.e. loads cell or stones used to test davit structure)

Part 5: Deliverables:

5.1 Drawings/Reports

5.1.1 The contractor shall arrange for the Palfinger Marine FSR and shall provide three typewritten reports detailing the inspections and his findings to the Chief Engineer.

5.2 Spares

5.3 Training

5.4 Manuals

Spec item #: H-09	**SPECIFICATION**	TCMSB Field #: N/A
Miranda Davit Annual Inspection		

Part 1: Scope:

1.1 The intent of this specification shall be for the contractor to supply the services of a Palfinger Marine Representative to carry out annual inspection on the vessel's Miranda Davit. Exchange centrifugal brake with new CCG supplied unit.

1.2 Contractor shall bid with an allowance of $40k, to be adjusted up or down by 1379 action, for the services of the Palfinger Marine Field Service Representative to supervise the inspection of the Miranda Davit.

1.3 This allowance encompasses FSR services for both H-09 and H-10. The Contractor shall allow one labourer and one millwright for 120 hours EACH to assist the Palfinger Marine FSR for work encompassed in H-09 and H-10.

1.4 This work shall be carried out in conjunction with the following:

1.4.1. H-09 Annual Inspections, Lifeboat and Davit

Part 2: References:

2.1 Guidance Drawings/Nameplate Data

2.2 Standards

2.2.1. The following Coast Guard Standards and or Technical Bulletins must be adhered to in the course of executing this specification. Copies of these standards and bulletins can be obtained from the CCG Technical Authority.

2.2.2. Canadian Coast Guard Fleet Safety Manual (DFO 5737)

2.2.3. Coast Guard ISM Confined Space Entry 7.D.9

2.2.4. Coast Guard ISM Hotwork procedures

2.2.5. Coast Guard ISM Fall Protection procedures

2.2.6. Canadian Coast Guard Welding Specifications for Ferrous Materials, Revision 4. (TP6151 E)

2.2.7. CWB CSA 47.1 latest revision Division I, II or III

2.2.8. SSPC-SPT

2.2.9. (a) TP 127E-TC Marine Safety Electrical Standards.

2.2.10. (b) IEEE Standard 45 - Recommended Practice for Electrical Installation on Shipboard

2.3 Regulations

2.3.1 Canada Shipping Act.

2.4 Owner Furnished Equipment

2.4.1 The contractor shall supply all materials, equipment, labour and parts required to perform the specified work unless otherwise stated.

Part 3: Technical Description:

3.1 General

3.1.1 Summary inspection of key components to be carried out as quickly as possible to identify critical path, and possible purchase of long-lead items.

3.1.2 Contact information for the FSR: ryan.fagan@palfingermarine.com

3.1.3 The Contractor shall inform Chief Engineer of testing and inspecting times.

3.1.4 Any replacement parts will be Owner-supplied.

3.2 Location

The Miranda Davits are located on the port side of the foc'sle deck.

3.3 Interferences

Contractor is responsible for the identification of all interference items, their temporary removal, storage and refitting to vessel.

Part 4: Proof of Performance

4.2 Inspection

All work shall be completed to the satisfaction of the Chief Engineer.

4.3 Testing

Davits are to be functionally tested in accordance with Palfinger Marine procedures and checklists.

4.3 Certification

4.3.1. Instruments or accessories required to perform testing of davits shall be certified and calibrated (i.e. loads cell or stones used to test davit structure)

Part 5: Deliverables:

5.1 Drawings/Reports

5.1.1 The contractor shall arrange for the Palfinger Marine FSR and shall provide a typewritten report in electronic format detailing the inspections and his findings to the Chief Engineer.

5.2 Spares

5.3 Training

5.4 Manuals

Spec item #: H-10	**SPECIFICATION**	TCMSB Field #: N/A
Liferaft Inspection		

Part 1: SCOPE:

1.3 The intent of this specification shall be to have our five Liferafts inspected, serviced, and recertified for ABS requirements.

1.4 This work shall be carried out in Conjunction with the following:

Part 2: REFERENCES:

2.1 Guidance Drawings/Nameplate Data

2.1.1. Life Saving Plan – (78) 1003
2.1.2. Liferafts:
(a) 25 persons, Type DBC, Serial # XDC5FJ32B313
(b) 25 persons, Type DBC, Serial # C/208
(c) 6 persons, Type Zodiac, Serial # XDC8EV38D909
(d) 25 persons, Type Zodiac, Serial # XDC7EY24A010-D
(e) 25 persons, Type Zodiac, Serial # XDC16089I112

2.2 Standards

2.2.1. The following Coast Guard Standards and or Technical Bulletins must be adhered to in the course of executing this specification. Copies of these standards and bulletins can be obtained from the CCG Technical Authority.
2.2.2. Canadian Coast Guard Fleet Safety Manual (DFO 5737)
2.2.3. Coast Guard ISM Confined Space Entry 7.D.9
2.2.4. Coast Guard ISM Hotwork procedures
2.2.5. Coast Guard ISM Fall Protection procedures
2.2.6. Canadian Coast Guard Welding Specifications for Ferrous Materials, Revision 4. (TP6151 E)
2.2.7. CWB CSA 47.1 latest revision Division I, II or III
2.2.8. SSPC-SPT

2.3 Regulations

2.3.1. Canada Shipping Act.

2.4 Owner Furnished Equipment

2.4.1. The contractor shall supply all materials, equipment, and parts required to perform the specified work unless otherwise stated.

Part 3: TECHNICAL DESCRIPTION:

3.1 General

3.1.1. The five Liferafts shall be removed from the Foc'sle Deck and transported to an OEM facility that is approved by ABS / Transport Canada Marine Safety Branch.

3.1.2. Upon completion of servicing and recertification the rafts shall be returned to the vessel and reinstalled in its original cradle.

3.1.3. The service date shall be stamped near the end of the refit period.

3.1.4. Contractor to allow $15,000.00 in the bid coast for inspection and recertification costa of the sub-contractor in addition to the cost of the contractors own work. Final cost shall be adjusted on receipt of invoice from the service provider by 1379 procedure.

3.2 Location

3.2.1. Port and Starboard Foc'sle Deck.

3.3 Interferences

3.3.1 Contractor is responsible for the identification of interference items, their temporary removal, storage and refitting to vessel.

Part 4: PROOF OF PERFORMANCE:

4.1 Inspection

4.1.1. All work shall be completed to the satisfaction of the Chief Engineer.

4.2 Testing

Certificates of Testing of Liferafts shall be supplied.

4.3 Certification

Certified Technicians performing testing of Liferafts.

Part 5: DELIVERABLES:

5.1 Drawings/Reports

5.1.1 Original certificates shall be given to the Chief Engineer. The contractor shall arrange for the FSR and shall provide a typewritten report in electronic format detailing the inspections and his findings to the Chief Engineer.

5.2 SparesN/A

5.3 TrainingN/A

5.4 ManualsN/A

Spec item #: H-11	**SPECIFICATION**	TCMSB Field #: N/A
A Deck (Purple) Accommodation Upgrade		

Part 1: SCOPE:

1.1 The intent of this specification shall be to refurbish the cabins, washrooms, on A Deck and one cabin on Focsle Deck. There are eight cabins and four washrooms for this specification. The contractor shall obtain the services of David Spurrell (Furniture Contractor) to install the pre-fabricated furniture to replace the old furniture.

1.2 This work shall be carried out in Conjunction with the following:

Part 2: REFERENCES:

2.1 Guidance Drawings/Nameplate Data

2.1.1. General Arrangement A and B Decks Drawing # T13-1051 sheet 3 of 4
2.1.2. Furniture Details Drawing # 41-00-01
2.1.3. Furniture List Including Washroom Furniture Drawing # 41-00-01
2.1.4. Lining Plan Drawing # 40-00-01
2.1.5. Ceiling Plan Drawing # 40-00-02
2.1.6. Joiner Details Drawing # 40-00-03
2.1.7. Deck Covering Plan Drawing # 35-00-01
2.1.8. Window and Sidelight Schedule Drawing # 28-00-01
2.1.9. Panel Dimensions: 2200 x 600 x 25 mm Insulated

<u>Areas To Be Dealt With:</u>

2.1.10. 2nd Officer Cabin 310 - Perimeter –12 meters, Area – 7 M^2
2.1.11. 3rd Engineer Cabin 311 - Perimeter – 12 meters, Area – 7 M^2
2.1.12. Common Washroom – Perimeter 8 meters, Area - 3.5 M^2
2.1.13. Ice Observer Cabin 312 - Perimeter –12 meters, Area – 7.0 M^2
2.1.14. Electronic Tech Cabin 313 - Perimeter – 12 meters, Area – 7.0 M^2
2.1.15. Common Washroom – Perimeter 8 meters, Area - 3.5 M^2
2.1.16. Oilers Cabin 308 – Perimeter 13 meters, Area – 9 M^2
2.1.17. Oilers Washroom – Perimeter 8 meters, Area – 3.5 M^2
2.1.18. Spare Cabin 309 – Perimeter 13 meters, Area – 8 M^2
2.1.19. Spare Cabin 307 – Perimeter 13 meters, Area – 8 M^2
2.1.20. Common Washroom – Perimeter 8 meters, Area – 3.5 M^2
2.1.21. Spare Cabin 201 (Focsle-Deck) – Perimeter 12 meters, Area-8 M^2

2.2 Standards

2.2.1. The following Coast Guard Standards and or Technical Bulletins must be adhered to in the course of executing this specification. Copies of these standards and bulletins can be obtained from the CCG Technical Authority.

2.2.2. Canadian Coast Guard Fleet Safety Manual (DFO 5737)

2.2.3. Coast Guard ISM Confined Space Entry 7.D.9

2.2.4. Coast Guard ISM Hotwork procedures

2.2.5. Coast Guard ISM Fall Protection procedures

2.2.6. Canadian Coast Guard Welding Specifications for Ferrous Materials, Revision 4. (TP6151 E)

2.2.7. CWB CSA 47.1 latest revision Division I, II or III

2.2.8. SSPC-SPT

2.2.9. (a) TP 127E-TC Marine Safety Electrical Standards.

2.2.10. (b) IEEE Standard 45 - Recommended Practice for Electrical Installation on Shipboard.

2.3 Regulations

2.3.1. Canada Shipping Act

2.3 Owner Furnished Equipment

2.4.1. The contractor shall supply all materials, equipment, and parts required to perform the specified work unless otherwise stated.

Part 3: TECHNICAL DESCRIPTION:

3.1 General

Strip Out Requirements:

3.1.1. The Coast Guard Electronic Technicians will disconnect the LAN system, Sound powered phone system, IC system, and satellite and radio systems from the cabins and lay aside for reuse. Owners will remove all loose equipment, entertainment equipment, books, files etc and store in a safe location to allow for the strip out.

3.1.2. Digital pictures shall be taken of each bulkhead and ceiling to locate all fixtures, switches and receptacles for reassembly purposes.

3.1.3. All wall clothes hooks and door hold backs, signage and muster list shall be removed and retained for reuse. The wooden curtain rod valance shall be removed and stored for reuse.

3.1.4. All wall mount convection heaters shall be removed and discarded. Allow for eleven heaters to be replaced with units of the same make as currently installed on Red deck. Heaters are 1000 watts for the cabins and 500 watts for the washrooms.

Cabins:

3.1.5. All book cases, book racks, chest of drawers, cupboards, desks, beds and wardrobes shall be removed and discarded.

3.1.6. The ceiling panels and perimeter trim shall be removed and discarded. The fluorescent light fixtures fitted in the panels shall be temporarily supported from above. The ventilation diffusers fitted in the panels shall be dismantled to the point where the panels can be removed. The smoke detectors fitted in the panels shall be hung up above the ceiling for reuse. The speakers fitted in the panels shall be hung up above the ceiling for reuse. The ceiling support track system shall remain in place to be used for the new panels.

3.1.7. The light switches, receptacles and speaker control shall be disconnected and laid aside for reuse. Allow for 8 boxes per cabin to be disconnected. The bunk lights and wall mount lamps shall be removed and laid aside for reuse.

3.1.8. The deck covering system consists of 10mm dexotex over steel deck, floor leveler over dexotex, and vinyl covering over leveler. The entire vinyl deck covering system shall be removed and discarded from the cabin decks. The dexotex shall be removed to the bare steel deck from around the perimeter adjacent to the bulkhead panels and fitted furniture; and extend approximately 4 to 6 inches from these areas.

3.1.9. The bulkhead panels shall be removed and discarded from the entire space. The existing panel supports shall remain in situ for the new panel channels to butt against.

Washrooms

3.1.10. The shower stalls are corner units with two open sides.

3.1.11. The sinks in washrooms shall be removed and discarded. All piping shall be disconnected. The sinks and vanities in the cabins with new furniture shall be removed and stored in a safe location for reuse.

3.1.12. Vanity wall cabinets shall be removed and discarded. The cabins with new furniture shall have the vanity wall cabinets removed and stored in a safe location. Wall mounted heaters shall be disconnected and removed. Receptacles and switches shall be disconnected, removed or pushed back for reuse. Vanity lights shall be removed and laid aside for reuse.

3.1.13. The contractor shall remove and discard the deck head panels and perimeter trim from the washroom area. The deck head panels are fitted with light, heat lamp, and exhaust fan louver. These shall be hung up above the ceiling for reuse.

3.1.14. The shower plumbing fixtures, hand rails, paper holder, soap dish, curtain rod shall be removed and reinstalled following the work. All other wall mounted fittings shall be removed and laid aside for reuse. The hot and cold water pipes penetrate the bulkhead panel to the shower valve. The toilet shall be removed and discarded; pipes shall be blanked off. The deck scuppers shall be plugged to prevent any debris from entering the drainage system.

3.1.15. The bulkhead panels shall be removed from the perimeter of the washroom. The deck tiles, boarder tiles, Dexotex Décor epoxy system and underlayment shall be removed to expose the steel deck. This includes washroom area, shower area and the raised lip approximately 12 inches high that encloses the shower stall.

3.1.16. Steel structure used for the toilet seats shall be cut from the deck and discarded.

Installation Requirements

3.1.17. The steel deck exposed following the removal of the underlayment and paneling shall be power tooled cleaned to bare metal. The surface of the steel deck shall be prepared in accordance with the manufactures specification for the new deck covering system. The deck areas shall be coated with two coats of epoxy primer with sufficient feathering up the ships side plating. The insulation shall be pushed up to allow for the feathering. Extraction fans shall be used to remove all airborne debris. The fans shall be vented to the exterior of the vessel.

3.1.18. Contractor shall allow for cutting bulkhead panels to fit and trim work required providing a finished appearance.

3.1.19. Owner supplied sheet metal support channel tracks shall be tack welded to all the deck areas and above structure to support the new bulkhead panels. The channels shall be installed around the entire perimeter in the same location as the old panels. New owner supplied wood grain panels (W89) for passageways, (Q63E) off white panels for washroom and cabins shall be installed in the channel track system. Penetrations shall be cut in the panels to suit all fixtures that were originally fitted. Penetrations for cables and water pipes that pass through the panels directly shall be fitted with rubber grommets for the full 1 inch panel depth. The top edge of the bulkhead panels shall be fitted with owner supplied sheet metal support channel tracks. The channels shall be fitted in such a manner that the panels can be removed by lifting and pulling out. The top channels shall be welded to surrounding structure with angle bar or flat bar. Owner supplied colored scheme panel joiners, end caps, inside corners, and outside corners shall be installed to give panel system a finished appearance. The end cap shall be used for panels butting against doors. The edges of the stepped out bulkhead panels shall be finished with edge trim. The passageway panels shall be drilled at a position to align with the steel bracket threaded holes for the handrail system.

3.1.20. New owner supplied insulated perforated and solid ceiling panels shall be installed to the existing track support system. The new panels are 8, 10, and 12 feet long. The longitudinal run of panels shall be divided with owner supplied Omega Profile Dividers to be fitted transversely. The longest panels shall be used where possible. Where panel ends are cut to length, the edges shall be folded in to give a finished appearance. Panels shall be cut out to fit the fixtures that where removed during the strip out, lights, vents, etc. The owner supplied perimeter support system shall be installed to the bulkhead panels. This consists of a two part assembly, Perimeter Angle Upper and Perimeter Z Profile Lower. Panels that run along the inboard and outboard bulkheads shall be cut longitudinally to fit; the edges shall be folded in give a finished appearance.

3.1.21. New toilet foundation seats shall be installed to the deck with studs to allow for fastening the toilets. Teflon spacers with the same shape as the toilet base shall be installed between the toilet base and seat.

3.1.22. The washroom deck surface shall be thoroughly cleaned before the new deck covering system is applied. The new deck covering system shall be installed over the entire areas.

3.1.23. The washrooms shall have 25mm thick of dexotex underlayment over steel deck and then covered with Dexotex Décor Epoxy continuous system. The area shall include washroom, shower stall, the raised section that forms the shower stall, and a 4 inch perimeter border. The color scheme of the Décor Epoxy system shall be determined with the aid of contractor supplied color charts to choose from at the time of application. All coatings shall be applied in accordance with manufacturer's application instructions with particular attention to curing times.

3.1.24. Decorative fiberglass shower stall enclosures shall be installed. The enclosures shall be fitted with pre-molded ledges/shelves with retainer rods for storing soaps, shampoo bottles etc. The style of the shower stalls shall be determined by samples from the contractor and agreed upon by the Chief Engineer. The new enclosures shall extend the full height of the shower stall. The edges of the enclosures shall have decorative edges. The enclosures shall be thoroughly sealed to prevent water from leaking out; the sealing method shall be decorative. The enclosures shall have penetrations to allow for piping. Shower mixing valves shall be replaced with new Crane Rada 722 Control Valves.

3.1.25. The cabin decks shall have 10mm of dexotex underlayment to fill in where the old underlayment was removed and feathered into the existing. An additional 25 ft^2 per cabin shall be installed IWO of removed bunks, lockers, desks, drawer stands. A layer of floor leveler shall be installed, and covered with vinyl floor covering the same as existing. The perimeter shall have a 4 inch border installed after the new furniture is installed. The border shall be approved material by TCMSB.

3.1.26. The heaters removed during the strip out shall be replaced with new commercial style wall mount convection heaters the same as fitted in the cabins on B Deck. The heaters are 230 volt 1000 watts. The heaters shall have built in digital thermostats, 500 watts in washrooms forced air wall mount.

3.1.27. All penetrations of bulkhead panels and ceiling panels shall be neatly cut and no exposed edges shall be visible.

3.1.28. All the removed items stored for reuse shall be replaced in their original location and fastened to the bulkheads. The power shall be reconnected as originally found. All plumbing shall be reconnected.

<u>Cabin Windows</u>

3.1.29. The windows located in the cabins shall be removed for maintenance and resealing by an authorized glass business. There are six windows total in the cabins on A deck. A man lift shall be required to remove the window although the window frame is removed from the inside and for installation and testing.

3.1.30. The window boxes are fitted with plexi-glass screw to the inboard flange of the window boxes. The plexi-glass is used to reduce the cold draft from the window. The plexi-glass shall be removed and laid aside for reuse.

3.1.31. The window assembly shall be unbolted from the superstructure and removed. The windows measure 610mm x 760mm and fitted with thirty 8mm bolt and nut assembly. The bolts pass in through the superstructure and through the flange of the window assembly. The bolts shall be removed from the superstructure and thoroughly cleaned. The flange area of the superstructure inside and outside shall be power tool cleaned to bare metal and feathered back to intact coating. The bare areas shall be coated with two coats of epoxy primer.

3.1.32. The window assembly shall disassembled by an authorized window representative. The glass assembly consists of a two pane unit laminated together and retained in the frame by a bolt on plate. The glass shall be removed; the window frame flange, glass pocket of the frame, and the retaining plate shall be thoroughly cleaned of all old sealant and debris. The glass shall be cleaned of old sealant and replaced with new marine approved sealant for sealing superstructure windows. Contractor shall provide data sheet of sealant to be used to the Chief Engineer before applying the product.

3.1.33. The window assembly shall be reinstalled with new 8mm stainless steel bolts and nylock nuts with a length the same as existing. The flange area of the window frame and superstructure shall be covered with a generous layer of approved marine sealant for bonding and sealing window frames to the superstructure. The bolt heads and bolt holes shall be sealed to prevent water from entering the interior. Contractor shall provide data sheet of sealant to be used to the Chief Engineer before applying the product.

3.1.34. The exterior seam of the glass and window frame shall be sealed with the approved sealant.

3.1.35. The plexi-glass shall be replaced following the approval from the testing.

3.2 Location

3.2.1. A Deck Frames 87 – 123

3.3 Interferences

3.3.1 Contractor is responsible for the identification of all interference items, their temporary removal, storage and refitting to vessel.

Part 4: PROOF OF PERFORMANCE:

4.1 Inspection

4.1.1. All work shall be completed to the satisfaction of the Chief Engineer.

4.2 Testing

The windows shall be hose tested with fire hose at a pressure of 60 psi. The Chief Engineer shall witness the test along with the ABS inspector if they are required.

4.3 Certification

Data sheets of Marine Sealant products

Part 5: DELIVERABLES:

5.1 Drawings/Reports

5.1.1 The Contractor is to provide a written report to the Chief Engineer detailing the information of the work performed with this item.

5.2 Spares

N/A

5.3 Training

N/A

Spec item #: H-12	**SPECIFICATION**	TCMSB Field #: N/A
Blue Deck Air Lock Upgrade		

Part 1: SCOPE:

1.1 The intent of this specification shall be to refurbish the port and starboard Air Locks on Blue Deck.

1.2 This work shall be carried out in Conjunction with the following:

Part 2: REFERENCES:

2.1 Guidance Drawings/Nameplate Data

2.1.1. General Arrangement Forecastle Deck
2.1.2. Lining Plan Drawing # 40-00-01
2.1.3. Ceiling Plan Drawing # 40-00-02
2.1.4. Joiner Details Drawing # 40-00-03
2.1.5. Deck Covering Plan Drawing # 35-00-01
2.1.6. Panel Dimensions: 2200 x 600 x 25 mm Insulated
Areas To Be Dealt With:
2.1.7. Port Air Lock - Perimeter –4.6 meters, Area – 1.2 M^2
2.1.8. Starboard Air Lock - Perimeter – 4.6 meters, Area – 1.2 M^2

2.2 Standards

2.2.1. The following Coast Guard Standards and or Technical Bulletins must be adhered to in the course of executing this specification. Copies of these standards and bulletins can be obtained from the CCG Technical Authority.
2.2.2. Canadian Coast Guard Fleet Safety Manual (DFO 5737)
2.2.3. Coast Guard ISM Confined Space Entry 7.D.9
2.2.4. Coast Guard ISM Hotwork procedures
2.2.5. Coast Guard ISM Fall Protection procedures
2.2.6. Canadian Coast Guard Welding Specifications for Ferrous Materials, Revision 4. (TP6151 E)
2.2.7. CWB CSA 47.1 latest revision Division I, II or III
2.2.8. SSPC-SPT
2.2.9. (a) TP 127E-TC Marine Safety Electrical Standards.

2.2.10. (b) IEEE Standard 45 - Recommended Practice for Electrical Installation on Shipboard.

2.3 Regulations

2.3.1. Hull Construction Regulations CSA

2.4 Owner Furnished Equipment

2.4.1. The contractor shall supply all materials, equipment, and parts required to perform the specified work unless otherwise stated. Coast Guard will supply bulkhead panels and ceiling panels.

Part 3: TECHNICAL DESCRIPTION:

3.1 General

3.1.1. The ship's Electrical Officer will disconnect the wall mounted light from each Air Lock

3.1.2. The deck head panels shall be removed and discarded. The bulkhead panels shall be removed from the aft and forward bulkheads along with narrow panels around the interior and exterior doors. The existing metal trim shall be removed from around the exterior door and retained for reuse.

3.1.3. The Dexotex has been removed from the deck on both Air Locks.

3.1.4. Contractor shall allow for cutting bulkhead panels to fit and trim work required providing a finished appearance.

3.1.5. Owner supplied sheet metal support channel tracks shall be tack welded to all the deck areas and above structure to support the new bulkhead panels. The channels shall be installed around the entire perimeter in the same location as the old panels. New owner supplied wood grain panels (W89) shall be installed in the channel track system. Penetrations shall be cut in the panels to suit all fixtures that were originally fitted. Penetrations for cables that pass through the panels directly shall be fitted with rubber grommets for the full 1 inch panel depth. The top edge of the bulkhead panels shall be fitted with owner supplied sheet metal support channel tracks. The channels shall be fitted in such a manner that the panels can be removed by lifting and pulling out. The top channels shall be welded to surrounding structure with angle bar or flat bar. Owner supplied colored scheme panel joiners, end caps, inside corners, and outside corners shall be installed to give panel system a finished appearance. The end cap shall be used for panels butting against doors. The edges of the stepped out bulkhead panels shall be finished with edge trim.

3.1.6. New owner supplied insulated solid ceiling panels shall be installed to the existing track support system. The new panels shall be installed. Where panel ends are cut to length, the edges shall be folded in to give a finished appearance. The owner supplied perimeter support system shall be installed to the bulkhead panels. This consists of a two part assembly, Perimeter Angle Upper and Perimeter Z Profile Lower. Panels that run along the inboard and outboard bulkheads shall be cut longitudinally to fit; the edges shall be folded in give a finished appearance.

3.1.7. The decks underlayment for both Air Locks shall be 10mm Dexotex. Followed by Dexotex Décor-Flor M Epoxy System, with a 4 inch border up the new panels.

3.1.8. The areas shall be closed off to allow curing of all products

3.2 Location

3.2.1. Raised Focsle Deck Air Locks, Port and Starboard

3.3 Interferences

3.3.1 Contractor is responsible for the identification of all interference items, their temporary removal, storage and refitting to vessel.

Part 4: PROOF OF PERFORMANCE:

4.1 Inspection

4.1.1. All work shall be completed to the satisfaction of the Chief Engineer.

4.2 Testing

4.3 Certification

Data sheets of Marine Dexotex products

Part 5: DELIVERABLES:

5.1 Drawings/Reports

5.1.1 The Contractor is to provide a written report to the Chief Engineer detailing the information of the work performed with this item.

5.2 Spares

N/A

5.3 Training

N/A

5.4 Manuals

N/A

Spec item #: H-13	**SPECIFICATION**	TCMSB Field #: N/A
	HVAC CLEANING	

Part 1: SCOPE:

1.1 Contractor shall arrange for cleaning of all ship's accommodation, wheelhouse and galley heating ventilation and air conditioning (HVAC) systems to National Air Duct Cleaners Association (NADCA) Standard.

Part 2: REFERENCES:

2.1 Guidance Drawings/Nameplate Data
DWG. 38-001 through 7
DWG. 38-00-09

Note: Galley exhaust arrangements are not shown on these drawings. An additional laundry exhaust connection is tied into toilet exhaust ductwork in utility locker on "B" deck.
Note: Refer dwg 38-00-01 - Ventilation indicated for space aft of casing on stbd side (emergency generator room) does not exist. This arrangement exists, instead, in space aft of casing on port side (change room. Two (2) toilet exhaust intakes and one (1) air supply diffuser dealt with.

See Appendix A, H-14 Ventilation System Cleaning

2.2 Standards

2.2.1 The HVAC system cleaning contractor shall be a certified member of the National Air Duct Cleaners Association (NADCA), or shall maintain membership in a nationally recognized non-profit industry organization dedicated to the cleaning of HV AC systems.

2.2.2 The HV AC system cleaning contractor shall have a minimum of one (1) Air System Cleaning Specialist (ASCS) certified by NADCA on a full time basis, or shall have staff certified by a nationally recognized certification program and organization dedicated to the cleaning of HV AC system.

2.2.3 A person certified as an ASCS by NADCA, or maintaining an equivalent certification by a nationally recognized program and organization, shall be responsible for the total work herein specified.

2.2.4 NADCA Standards must be followed with no modifications or deviations being allowed.

2.2.5 Applicable Standards and Publications

The following current standards and publications of the issues currently in effect fonn a part of this specification to the extent indicated by any reference thereto:
a) National Air Duct Cleaners Association NADCA): "Assessment, Cleaning & Restoration of HVAC Systems (ACR 2005)," 2004.
b) National Air Duct Cleaners Association NADCA): "Understanding Microbial Contamination in HVAC Systems," 1996.
c) National Air Duct Cleaners Association NADCA): "Introduction to HVAC System Cleaning Services," 2004.
d) National Air Duct Cleaners Association (NADCA): Standard 05 "Requirements for the Installation of Service Openings in HV AC Systems," 2004.
e) Underwriters' Laboratories (UL): UL Standard 181.
f) American Society of Heating, Refrigerating and Air Conditioning Engineers (ASHRAE): Standard 62-89, "Ventilation for Acceptable Indoor Air Quality".
g) Environmental Protection Agency (EPA): "Building Air Quality," December 1991.
h) Sheet Metal and Air Conditioning Contractors' National Association (SMACNA): "HVAC Duct Construction Standards - Metal and Flexible," 1985.
i) North American Insulation Manufacturers Association NAIMA): "Cleaning Fibrous Glass Insulated.

2.3 Regulations
N/A

2.4 Owner Furnished Equipment
2.4.1 The contractor shall supply all materials, equipment, and parts required to perfonn the specified work unless otherwise stated.

Part 3: TECHNICAL DESCRIPTION:

3.1 General

3.1.1 Any discrepancy between as fitted ventilation arrangement and arrangement shown on noted drawings shall be brought to the attention of Chief Engineer.

3.1.2 All dampers in duct work systems, including fire dampers shall be proven functional and shall be returned to as found position on completion of duct work cleaning.

3.1.3 The contractor shall maintain a copy of all current MSDS documentation and safety certifications at the site at all times, as well as comply with all other site documentation requirements of applicable OSHA programs and this specification.

3.1.4 Contractor shall submit to the owner all Material Safety Data Sheets (MSDS) for all chemical products proposed to be used in the cleaning process.

3.l.5 The Contractor shall be responsible for the removal of visible surface contaminants and deposits from within the HVAC system in strict accordance with these specifications.

3.l.6 The HVAC system includes any interior surface of the air distribution systems as listed in item #2 of this specification. This includes the entire heating and ventilation system from the points where the air enters the system to the points where the air is discharged from the system. The return air grilles, return air ducts to the air handling unit (AHU), the interior surfaces of the AHU, mixing box, heating compartment, humidifiers, supply air ducts, fans, fan housing, fan blades, filters, filter housings, heating coils, and supply diffusers are all considered part of the HVAC system. The HVAC system may also include other components such as dedicated exhaust and ventilation components and make-up air systems.

3.l.7 The HVAC system cleaning contractor shall perform a visual inspection of the HVAC system to determine appropriate methods, tools, and equipment required to satisfactorily complete this project. The cleanliness inspection should include air handling units and representative areas of the HVAC system components and ductwork. In HVAC systems that include multiple air handling units, a representative sample of the units should be inspected.

3.1.8 Any ships spaces entered to facilitate HVAC system cleaning shall be protected from soiling or any other damage as a result of HVAC system cleaning.

3.l.9 Any item of ships outfit disturbed to facilitate HVAC system cleaning shall be returned to an as found arrangement and condition of cleanliness on completion of HVAC system cleaning.

3.1.1 0 Debris removed during cleaning shall be collected and precautions must be taken to ensure that debris is not otherwise dispersed outside the HVAC system during the cleaning process.

3.1.11 Particulate Collection Equipment shall not exhaust inside the ship. Mechanical Cleaning operations shall be undertaken only with Particulate Collection Equipment in place, including adequate filtration to contain debris removed from the HVAC system. Precautions shall be taken to locate the equipment down wind and away from all air intakes and other points of entry into the vessel.

3.1.12 Cleaning methods shall be employed such that all HVAC system components must be Visibly Clean as defined in applicable standards (see NADCA Standards). Upon completion, all components must be returned to those settings recorded just prior to cleaning operations.

3.1.13 Air-Volume Control Devices: Dampers and any air-directional mechanical devices inside the HVAC system must have their position marked prior to cleaning and, upon completion, must be restored to their marked position.

3.1.14 Service Openings: The contractor shall utilize service openings, as required for proper cleaning, at various points of the HVAC system for physical and mechanical entry, and inspection.

3.1.15 Contractor shall utilize the existing service openings already installed in the HV AC system where possible.

3.1.16 Other openings shall be created where needed and they must be created so they can be sealed in accordance with industry codes and standards. Contractor shall inform the Chief Engineer, prior to creating more openings.

3.1.17 Closures must not significantly hinder, restrict, or alter the airflow within the system.

3.1.18 Closures must be properly insulated to prevent heat loss/gain or condensation on surfaces within the system.

3.1.19 Openings shall not compromise the structural integrity of the system.

3. 1.20 Construction techniques used in the creation of openings shall conform to requirements of applicable TCMSB regulations, and applicable NFPA and NADCA Standards.

3.1.21 Cutting service openings into flexible duct shall not be permitted. Flexible duct shall be disconnected at the ends, as needed for proper cleaning and inspection.

3.1.22 All service openings capable of being re-opened for future inspection or remediation shall be clearly marked and shall have their location reported to the owner in project report documents.

3.1.23 Ceiling Sections: The contractor may remove and reinstall ceiling sections to gain access to HVAC systems during the cleaning process.

3.1.24 Air distribution devices (registers, grilles & diffusers): The contractor shall clean all air distribution devices.

3.1.25 Air handling units, terminal units (V AV, Dual duct boxes, etc.), blowers and exhaust fans: The contractor shall insure that supply, return, and exhaust fans and blowers are thoroughly cleaned. Areas to be cleaned include blowers, fan housings, plenums, blades, or vanes, shafts, baffles, dampers and drive assemblies. All visible surface contamination deposits shall be removed in accordance with NADCA Standards.

3.1.26 Contractor shall : Clean all air handling units (AHU) internal surfaces, components and condensate collectors and drains. Assure that a suitable operative drainage system is in place prior to beginning wash down procedures.

3.1.27 Duct Systems. Contractor shall: Create service openings in the system as necessary in order to accommodate cleaning of otherwise inaccessible areas. Mechanically clean all duct systems to remove all visible contaminants, such that the systems are capable of passing Cleaning Verification Tests (see NADCA Standards.

3.1.28 Disposal of Debris: All Debris removed from the HVAC System shall be disposed of in accordance with applicable federal, Provincial and local requirements.

3.1.29 Source Removal Cleaning Methods: The HVAC system shall be cleaned using Source Removal mechanical cleaning methods designed to extract contaminants from within the HVAC system and safely remove contaminants from the ship. It is the contractor's responsibility to select Source Removal methods that will render the HVAC system Visibly Clean and capable of passing cleaning verification methods (See applicable NADCA Standards) and other specified tests, in accordance with all general requirements. No cleaning method, or combination of methods, shall be used which could potentially damage components of the HVAC system or negatively alter the integrity of the system.

3.1.30 All methods used shall incorporate the use of vacuum collection devices that are operated continuously during cleaning. A vacuum device shall be connected to the downstream end of the section being cleaned through a predetermined opening. The vacuum collection device must be of sufficient power to render all areas being cleaned under negative pressure, such that containment of debris and the protection of the indoor environment are assured.

3.1.31 All vacuum devices shall be equipped with Particulate Collection including adequate filtration to contain Debris removed from the HVAC system. Such devices shall exhaust in a manner that will not allow contaminants to re-enter the facility. Release of debris outdoors must not violate any outdoor environmental standards, codes or regulations.

3.1.32 All methods require mechanical agitation devices to dislodge debris adhered to interior HVAC system surfaces, such that debris may be safely conveyed to vacuum collection devices. Acceptable methods will include those, which will not potentially damage the integrity of the ductwork.

3.1.33 GALLEY EXHAUST
Scheduling of galley exhaust system cleaning shall be coordinated with Chief Engineer and shall commence at 1800 hrs and continue through to completion.

3.1.34 All galley equipment shall be covered and protected as required to prevent any contamination of food preparation and service areas by the cleaning process. Galley shall be returned to an as found arrangement and state of cleanliness on completion of cleaning process.

3.1.35 Galley exhaust is facilitated by means of an independent fan drawing air from range hood through a "Gaylord Ventilator" grease extractor.

3.1.36 Arrangement of ventilator includes four (4) baffles located within air passage extending length of ventilator with clearance between the baffles of approx. 2-1/2".

3.1.37 Arrangement of ventilator is further described in excerpt from manual included in Appendix A, H-14. Instruction manual available on request.

3.l.38 Ventilator sloping grease gutters, pre-flush drain and outlet main drain pipes shall be cleaned and proven clear.

3.l.39 Ships staff, accompanied by contractor, will ensure power to above units is off at main breaker and locked out.

3.1.40 Contractor shall assume galley exhaust ducting to be soiled with an accumulation of residual grease.

3.1.41 Access to duct work requires removal of galley deck head panels and inference items including, but not limited to, six (6) panels, one foot (1 ') wide x eleven (11 ') long, 3 electrical fixtures, two (2) vent outlets and two (2) speakers.

3.1.42 Further access is via ventilation compartment manhole on port side of house front.

3.1.43 Access to ducting internal areas is through existing cut outs.

3.1.44 Remaining ductwork consists of section 22" diameter x 10 foot in length (fan inlet) and section 10" x IS" x IS" (fan discharge).

3.1.45 Exhaust fan shall be electrically isolated (this will be done by Ships Electrical Officer) before work on the duct work begins. Flanges and duct work of the motor casing to be cleaned and new gaskets installed.

3.1.46 Damaged system components found during the inspection shall be documented and brought to the attention of the Chief Engineer.
3.1.47 All work shall be completed to the satisfaction of Chief Engineer.

3.2 Location
Accommodation Supply Plant # I - 4500 CFM
Accommodation Supply Plant #2 - 4500 CFM
Wheelhouse Supply - 3200 CFM
Toilet Exhaust - 3000 CFM
Sick Bay Exhaust - 235 CFM
Galley Exhaust - 2600 CFM
Laundry Exhaust (four of) - Natural vent X 3, via toilet exhaust X 1
GAYLORD VENTILATOR:
MODEL: BD
SIN: BF100E60B
EXHAUST CLEANING/CONTROL STATION:
MODEL: C- l00 A;
SIN: LVl284
VENTILATOR DAMPER:
MODELC-61

3.3 Interferences
3.3.1 Contractor shall be responsible for the identification of any interference items, their temporary removal, storage and refitting to the vessel.

Part 4: PROOF OF PERFORMANCE:

4.1 Inspection

4.1.1 Verification of HVAC System cleanliness shall be detennined after mechanical cleaning.

4.1.2 The HVAC system shall be inspected visually to ensure that no visible contaminants are present.

4.1.3 If no contaminants are evident through visual inspection, the HV AC system shall be considered clean; however, the owner reserves tile right to further verify system cleanliness through Surface Comparison Testing or the NADCA vacuum test specified in the NADCA standards.

4.1.4 If visible contaminants are evident through visual inspection, those portions of the system where contaminants are visible shall be recleaned and subjected to re-inspection for cleanliness.

4.1.5 NADCA vacuum test analysis shall be performed by a qualified third party experienced in testing of this nature.

4.2 Testing
N/A

4.3 Certification
N/A

Part 5: DELIVERABLES:

5.1 Drawings/Reports
At the conclusion of the project, the Contractor shall provide a report to Chief Engineer indicating the following:
• Success of the cleaning project, as verified through visual inspection.
• Areas of the system found to be damaged and/or in need of repair.

5.2 Spares N/A
5.3 Training N/A
5.4 Manuals N/A

Spec item #: HD-01	**SPECIFICATION**	TCMSB Field #: N/A
	Drydocking	

Part 1: SCOPE:

1.1 The intent of this specification shall be to drydock the vessel for regulatory inspections, maintenance and installation of new equipment as specified in the refit specification for the drydocking.

1.2 This work shall be carried out in Conjunction with the following:

Part 2: REFERENCES:

2.1 Guidance Drawings/Nameplate Data

2.1.1. Docking Plan Drawing # 00-00-08

2.2 Standards

2.2.1. The following Coast Guard Standards and or Technical Bulletins must be adhered to in the course of executing this specification. Copies of these standards and bulletins can be obtained from the CCG Technical Authority.

2.2.2. Canadian Coast Guard Fleet Safety Manual (DFO 5737)

2.2.3. Coast Guard ISM Confined Space Entry 7.D.9

2.2.4. Coast Guard ISM Hotwork procedures

2.2.5. Coast Guard ISM Fall Protection procedures

2.2.6. Canadian Coast Guard Welding Specifications for Ferrous Materials, Revision 4. (TP6151 E)

2.2.7. CWB CSA 47.1 latest revision Division I, II or III

2.2.8. SSPC-SPT

2.2.9. (a) TP 127E-TC Marine Safety Electrical Standards.

2.2.10. (b) IEEE Standard 45 - Recommended Practice for Electrical Installation on Shipboard.

2.3 Regulations

2.3.1. Hull Construction Regulations

2.4 Owner Furnished Equipment

2.4.1. The contractor shall supply all materials, equipment, and parts required to perform the specified work unless otherwise stated.

Part 3: TECHNICAL DESCRIPTION:

3.1 General

3.1.1. The vessel shall be docked and undocked and a suitable number of Lay Days shall be included to perform the work described herein as well as a margin of time to cover work arising as specified by the contract. Contractor to quote unit cost per Lay Day for adjustment purposes. All manpower, materials, tugs, pilots etc. required to carry out the work shall be supplied by the Contractor and shall be to approval of the Chief Engineer.

3.1.2. A docking plan is available on board the vessel and will be provided to the successful Contractor. Contractor will be responsible to ensure drawing is returned to vessel upon completion of work.

3.1.3. The underwater external hull of the vessel shall be surveyed by ABS for credit.

3.1.4. The bow overhang shall be supported by at least 1 bow shore. The bow shore is not to be removed until just before ship is undocked. Contractor to prepare keel and margin blocks and fit the necessary breast and bow shores to maintain the true alignment of the ship's hull and equipment for the dry-docking period.

3.1.5. The vessel shall be dry-docked such that dry-docking plugs, sea bays, inlet grids, anode plates and transducer orifices are clear of the blocks. Any movement of the blocks necessary for sandblasting and/or painting or removal of docking plugs shall be the responsibility of the Contractor. Contractor shall quote on moving 10 blocks. Contractor to provide a unit cost for moving 1 block for adjustment purposes.

3.1.6. Docking shall be undertaken during the first three days of the contract period. The Contractor shall prepare the dock in advance of the ship's arrival and the official start of the dry-docking. The dry docking shall be under the direct supervision of a Certified Docking Master. If premium time is required for evening shifts or weekend work to meet this objective, the Contractor is to identify this and include all costs in his quotation.

3.1.7. The vessel shall not to be placed in the same dock with any other ship for any part of the contract period. A minimum clearance of 5' shall be available below the keel.

3.1.8. Contractor shall bid a price of $7000 for tugs and/or pilot services as required. This shall be adjusted as necessary as per required 1379 action.

3.1.9. Contractor shall be responsible for the safe transfer of the ship from the pre-docking berth or location onto its docking blocks. During docking, radio contact shall be maintained between the vessel's Commanding Officer and the Contractor's docking master.

3.1.10. Within 8 hours of docking, cleaning shall commence on the underwater hull by high-pressure fresh water washing (6000 psi minimum) to remove all marine growth and allow preliminary inspection.

3.1.11. Prior to commencing water blasting, all hull mounted equipment and openings shall be fully protected.

3.1.12. The Contractor shall give the Chief Engineer a minimum of 4 hours advance notice before adding / removing fluids from any ship's tanks.

3.1.13. Adequate and safe access to the vessel shall be provided through a minimum of 2 gangways, complete with safety nets, lights, and rails, throughout the drydocking period.

3.1.14. Any contamination of the vessel's hull by materials (i.e. oil) present in the dock shall be cleaned, after the vessel is re-floated and clear of the dock, at the Contractor's expense and to the satisfaction of the Chief Engineer.

3.2 Location

3.2.1.

3.3 Interferences

3.3.1 Contractor is responsible for the identification of interference items, their temporary removal, storage and refitting to vessel.

Part 4: PROOF OF PERFORMANCE:

4.1 Inspection

All work shall be completed to the satisfaction of the Chief Engineer.

4.2 Testing

N/A

4.3 Certification

N/A

Part 5: DELIVERABLES:

5.1 Drawings/Reports

5.1.1 The Contractor is to provide a written report to the Chief Engineer detailing the information of the work performed with this item.

5.2 Spares

N/A

5.3 Training

N/A

5.4 Manuals

N/A

Spec item #: HD-02	**SPECIFICATION**	TCMSB Field #: N/A
Underwater Hull Inspection and Coating		

Part 1: SCOPE:

1.1 The intent of this specification shall be to clean, repair coating, and inspect the hull of the vessel. The entire underwater hull is coated with Intershield 163 Inerta 160 coating with the exception of areas on the flat bottom of the hull. These uncoated areas of Inerta shall be abrasive blasted back to intact Inerta or bare steel.

1.2 The finished coating scheme shall be black for the areas noted 3.1.1 . The band of red paint that overlaps the black does not adhere to the Inerta coating and flakes off

1.3 Enclosures shall be erected for areas of coating application.

1.4 This work shall be carried out in Conjunction with the following:

- Starboard Propeller and Tailshaft Removal
- Seabox and Seabay Maintenance
-

Part 2: REFERENCES:

2.1 Guidance Drawings/Nameplate Data

2.1.1. Intershield 163 Inerta 160
2.1.2. Docking Plan

2.2 Standards

2.2.1. The following Coast Guard Standards and or Technical Bulletins must be adhered to in the course of executing this specification. Copies of these standards and bulletins can be obtained from the CCG Technical Authority.
2.2.2. Canadian Coast Guard Fleet Safety Manual (DFO 5737)
2.2.3. Coast Guard ISM Confined Space Entry 7.D.9
2.2.4. Coast Guard ISM Hotwork procedures
2.2.5. Coast Guard ISM Fall Protection procedures
2.2.6. Canadian Coast Guard Welding Specifications for Ferrous Materials, Revision 4. (TP6151 E)
2.2.7. CWB CSA 47.1 latest revision Division I, II or III
2.2.8. SSPC-SPT
2.2.9. Coast Guard paint Scheme

2.3 Regulations

2.3.1. Canada Shipping Act.

2.4 Owner Furnished Equipment

2.4.1. The contractor shall supply all materials, equipment, and parts required to perform the specified work unless otherwise stated.

Part 3: TECHNICAL DESCRIPTION:

3.1 General

3.1.1. The present area of the hull is coated with Intershield 163 Inerta 160 with the exception of areas on the flat bottom of the hull The complete underwater surface area includes and up to the 10 m level above keel (up to and including the fender), stern roller, forward and aft along knuckle chine to just below (but extending up to include areas of anchor pockets) is approximately 3500 m^2 (37,675 ft^2). Care to be taken during blasting and painting operations that stern roller bearing arrangement is protected by blocking off area between closing plate and roller. Roller can be turned by inserting bar in socket holes on starboard side of roller.

3.1.2. The entire underwater area of the ship from the keel to the top of the light water line shall be hydro blasted and cleaned of all marine growth and salts. This shall include rudder, propellers, and thruster tunnel. The cleaning shall be done immediately after the vessel is dry-docked.

3.1.3. The entire underwater hull shall then be inspected by the Chief Engineer, ABS Surveyor, and a supervisory representative from the contractor. The contractor shall plan a suitable date and time for the hull inspection. The contractor shall inform the Chief Engineer 24 hours prior to the inspection time. All parties involved in the inspection shall be present for the inspection. The contractor shall supply and erect staging/scaffolding/manlift as required for the inspection.

3.1.4. Following any required hull repairs the contractor shall make repairs to areas where the hull coating is missing as directed by the Chief Engineer.

3.1.5. In order to avoid any confusion as to the total area to be repaired, the contractor shall assign a representative, who along with the owner's representative to view the ship as it sits on the blocks subsequent to cleaning but prior to coating repairs. The representatives shall view the ship and agree upon the total area of the hull that shall be repaired and coated.

3.1.6. The contractor shall plug deck scuppers, discharges, as well as take other measures necessary to prevent any liquids from contaminating areas being prepared or coated. Before commencement of grit blasting activities, Contractor is responsible for preventing the ingress of grit & other air blown debris through all openings in the ship, including the following:

- Stern tubes, shafting and propellers.
- Sea bays & sea inlet grids.
- All bubbler discharge nozzles.
- All overboard discharge valves.
- Engine room supply and exhaust fans which cannot be closed with louver doors.

- All void and tank vents.
- Anchor windlass, especially exposed gears, incl. control station.
- Tugger winches & control stations.
- Winches & exposed cables on 40 T & 5T cranes.
- Rudder gland.

Porthole glasses in the hull to be covered with minimum ¼" masonite or plywood and sealed with duct tape on perimeter.The contractor shall also take measures to ensure that no damage, unnecessary cleaning, or any repairs result from either the hull preparation process or coating application. Measures shall be taken to ensure that surfaces and equipment, other than those specified, are not coated and that the coating shall not block any inlets or discharges in the shell. Deck machinery and other gear shall be protected from damage by grit and coatings.

3.1.7. All traces of grit used for blast cleaning, shall be removed by the contractor. The contractor shall be responsible and liable for ensuring that the hull is clear and clean prior to, during and immediately after the coating application.

3.1.8. Abrasive blast material shall not be permitted to enter <u>any</u> part of the vessel. The contractor shall ensure that every opening into the vessel where grit may gain entry is covered.

3.1.9. The Coast Guard will provide the services of a NACE inspector to supervise the surface preparation, environmental condition monitoring, mixing, and application of the coating.

3.1.10. The contractor shall provide all means to ensure the environmental conditions are correct for applying Intershield 163 Inerta 160. An enclosure shall be fitted to enclose the flat bottom area of the vessel's hull. The approximate area is 400 M^2 between Frames 55 to 123.

Surface Preparation

3.1.11. Abrasive Blast all bare and rusted areas not coated with Inerta 160 to SSPC-SP-10 Near White Metal. Abrasive blast the remaining area of the flat bottom hull entire hull to remove all the Ameron coating until the old existing Inerta coating is exposed. All edges of intact Inerta coating shall be feathered back to accept new coating. The existing coating thickness is in the range of 200 mils thick. Extensive blasting shall be required to expose the old Inerta coating. Contractor shall allow for 50 M^2 of bare and rusted areas and 350 M^2 of intact Ameron coating.

3.1.12. Contractor shall repair all damaged areas of the black Inerta coating for the remainder of the underwater hull. Contactor shall bid on repairing 50 M^2 of damaged coating that includes the cost of blasting, power tooling, coating, and providing means to comply with the required environmental conditions. Include unit cost of 1 M^2 for the repair and coating procedures.

3.1.13. All repairs to damaged coating areas shall be completed as per manufacturer's instructions for repairing Intershield 163 Inerta 160 system.

Topcoat

3.1.14. Apply one full coat of Intershield 163 Inerta 160 to the 400 M^2 area of the flat bottom hull. Color shall be black. Apply one coat of Intershield 163 Inerta 160 to all damaged areas of the remaining hull. Application of Inerta and DFT shall be in accordance with the products' data sheet.

3.1.15. Sea-bay grids shall be protected during application of the coating and orifices shall be proven original diameter before undocking. The transducers shall be protected as well. The Contractor shall remove from the ship all traces of grit and air blown debris resulting from the grit blasting operation. Areas to be cleaned on a daily basis include passageways from gangways to entranceways into ship to prevent tracking of the blast debris into the ship.

3.1.16. The Contractor shall be responsible for ensuring that personnel engaged in preparing and applying the paint are experienced and thoroughly familiar with the necessary procedures involved.

3.1.17. All staging, cranage, screens, heaters and environmental control equipment, lighting and any other support services, equipment and materials necessary to perform the tasks set out in this specification shall be supplied by the Contractor.

3.1.18. Suitable storage facilities for the materials and equipment shall be provided close to the work site. These facilities shall be maintained at a temperature recommended by the paint manufacturer and necessary to ensure ease of preparation and application of paint.

3.1.19. Contractor to ensure a backup set of spray equipment is available, to ensure continuous application of paint. No painting is to commence if there is no backup set of spray equipment.

3.1.20. All connections to the hull are to be removed in good order (i.e. welding lugs, grounding connections etc.), ground smooth and coated with the Inerta coating system.

3.1.21. Load line and draft marks to be painted on hull on both sides using International Intergard white paint after the hull coating has cured.

3.1.22. The contractor shall perform the work in strict accordance with International Coatings application instructions for each applicable coating.

3.2 Location

3.2.1. Underwater portion of the entire vessel.

3.3 Interferences

3.3.1 Contractor is responsible for the identification of interference items, their temporary removal, storage and refitting to vessel.

Part 4: PROOF OF PERFORMANCE:

4.1 Inspection

4.1.1. All work shall be completed to the satisfaction of the Chief Engineer.

4.2 Testing

The contractor shall provide DFT readings to the owners representative following each coat at the damaged coating areas. The owners representative shall witness the readings as they are taken. In conjunction with any functional quality assurance procedure, the following points will be carried out:-

- Provide a list of batch numbers with corresponding dates of manufacture.
- Record the quantity and type of any solvent added.
- Measure and record the ambient conditions.
- Record details of spray tips and pressures.
- WFT guage readings to be taken on a regular basis during application.
- Using a calibrated DFT guage, fifteen (15) measurements per 100 square ft. are to be taken and recorded. Upon agreement of consistency with the Chief Engineer, fifteen (15) measurements per 1000 square ft. are to be taken and recorded.
- All recorded information is to be typewritten and three (3) copies are to be given to the Chief Engineer.

4.3 Certification

N/A

Part 5: DELIVERABLES:

5.1 Drawings/Reports

5.1.1 The Contractor is to provide a written report to the Chief Engineer detailing the information of the work performed with this item.

5.2 Spares

N/A

5.3 Training

N/A

5.4 Manuals

N/A

Spec item #: HD-03	**SPECIFICATION**	TCMSB Field #: N/A
	Hull Butts and Seams	

Part 1: SCOPE:

1.1 The intent of this specification shall be to repair wasted areas of welding seams and butts on the underwater portion of the hull.

1.2 This work shall be carried out in Conjunction with the following:
Underwater Hull Coating
Tailshaft Removal
Anode Replacement of Impressed Current System
Tank Inspections

Part 2: REFERENCES:

2.1 Guidance Drawings/Nameplate Data

2.1.1. Shell Expansion Drawing # 07-00-01

2.2 Standards

2.2.1. The following Coast Guard Standards and or Technical Bulletins must be adhered to in the course of executing this specification. Copies of these standards and bulletins can be obtained from the CCG Technical Authority.
2.2.2. Canadian Coast Guard Fleet Safety Manual (DFO 5737)
2.2.3. Coast Guard ISM Confined Space Entry 7.D.9
2.2.4. Coast Guard ISM Hotwork procedures
2.2.5. Coast Guard ISM Fall Protection procedures
2.2.6. Canadian Coast Guard Welding Specifications for Ferrous Materials, Revision 4. (TP6151 E)
2.2.7. CWB CSA 47.1 latest revision Division I, II or III
2.2.8. SSPC-SPT

2.3 Regulations

2.3.1. Hull Construction Regulations CSA

2.4 Owner Furnished Equipment

2.4.1. The contractor shall supply all materials, equipment, and parts required to perform the specified work unless otherwise stated.

Part 3: TECHNICAL DESCRIPTION:

3.1 General

3.1.1. Hull plate welding butts and seams shall be inspected and repaired by the contractor and re-inspected by the Chief Engineer and ABS.

3.1.2. Seams and butts selected for repair shall be marked, cleaned to sound metal by air arc gouging and / or grinding and brought up to the original level by ABS approved welding techniques and materials. Contractor shall use welding rods suitable for use with Grade EH-36 modified steel. Contractor shall ensure that last pass or "hard cap" over any welded seam is done using 7018 RCR welding rods. All work shall be performed to the approval of ABS and Chief Engineer.

3.1.3. For bidding purposes, Contractor shall include in their bid price the cost of 750 feet of air arc gouging and 2000 bead feet of weld. Contractor shall include a unit cost per foot for air arc gouging and unit cost per bead foot of weld for adjustment purposes. Contractor shall include any staging requirements in quotation.

3.1.4. Butts and seams falling in way of any fuel tanks will require the fuel tank to be gas-freed and certified safe for hot work. Butts and seams falling in way of ballast/void tanks that are painted will require interior paint work to be touched up in way of heat-damaged paint. Cost for gas-freeing shall be provided. Cost for touch up paint shall be provided.

3.1.5. Contractor shall quote on the services of a man-lift and operator for 8 hours for survey and inspection purposes. Contractor shall quote hourly rate for this work.

3.1.6. All work shall be completed to the approval of the Chief Engineer and ABS.

3.2 Location

3.2.1.

3.3 Interferences

3.3.1 Contractor is responsible for the identification of interference items, their temporary removal, storage and refitting to vessel.

Part 4: PROOF OF PERFORMANCE:

4.1 Inspection

4.1.1. All work shall be completed to the satisfaction of the Chief Engineer.

4.2 Testing

N/A

4.3 Certification

N/A

Part 5: DELIVERABLES:

5.1 Drawings/Reports

5.1.1 The Contractor is to provide a written report to the Chief Engineer detailing the information of the work performed with this item.

5.2 Spares

N/A

5.3 Training

N/A

5.4 Manuals

N/A

Spec item #: HD-04	**SPECIFICATION**	TCMSB Field #: N/A
5 Year 40 Ton Crane Inspection		

Part 1: SCOPE:

1.1 The intent of this specification shall be to perform a five year inspection, maintenance and load testing of our 40 ton crane under the supervision of a BLM service technician, Chief Engineer and ABS Surveyor. BLM to survey crane to see what is required to bring it back to original and what would be the replacement crane for existing, this service to be priced separately.

1.2 This work shall be carried out in Conjunction with the following:

Part 2: REFERENCES:

2.1 Guidance Drawings/Nameplate Data

2.1.1 Reference Drawings:

1) Drawing 6503520 Telescopic Guiding - Reference 6503520
2) Drawing 6503496 Block 40T - 2 Sheaves - Reference 6406806
3) Drawing 6503521 Jib Head Sheaves Rev A - Reference 6406818
4) Drawing 6503284 Luffing Equiped Block - Reference 6503284
5) Drawing 6109495 Fitting of Slewing Bearing - Reference 6406187
6) Drawing 6503059 Hoisting Winch 25T - Reference 6406755
7) Drawing 6503386 Cab Assembly - Reference 6406759
8) Drawing 6503323 Mounting Jib Axle & Cylinder - Ref 6406751
9) Drawing 6503532 Repartition Box Rev 1 - Reference 6406768
10) Drawing 6503454 Assembly Cylinder V320 C2630 – Ref 6406663
11) Drawing 6503522 mounting Cylinder (Telescopic) – Ref 6406819
12) Drawing 6503497 Equiped Jack Block - Reference 6503497

2.1.2 Manufacturer: BLM

- Type: Telescopic Electro-Hydraulic Crane 40T/8.5M,35T/10M, 17T/20M
- Identification : NO1539
- General Arrangement : # 97476
- Weight : 24.7 ton

2.1.3 Contact : NOV – BLM
15 rue de la Métallurgie
44482 Carquefou
CEDEX France

2.1.4 **Main Motor**

- Manuf - BLM
- Volts - 460
- Amps - 175
- KW - 115
- RPM - 1775
- Phase - 3
- Cycles – 60
- Serial - 5014438

2.1.5 **Hyd Circ PP Motor**

- Manuf - Hico
- Volts - 460
- Amps - 6.8
- HP - 5
- RPM - 1725
- Phase - 3
- Cycles – 60
- Frame - 184T

2.1.6 **Gearbox Oil Circ PP Motor**

- Manuf - U.S Electric Motors
- Volts - 460
- Amps - 13.1
- HP - 10
- RPM - 1740
- Phase - 3
- Cycles – 60
- Frame - 215T

2.1.7 **Hyd Cooling Fan Motor**

- Manuf - Emerson
- Volts - 460
- KW - 2.2
- HP - ?
- RPM - 1775
- Phase - 3
- Cycles – 60
- Frame - ?

2.1.8 **Gearbox Oil Cooling Fan Motor**

- Manuf -
- Volts - 460
- Amps - ?
- HP - 1.5 Approx
- RPM - ?
- Phase - 3
- Cycles – 60
- Frame - ?

2.2 Standards

2.2.1. The following Coast Guard Standards and or Technical Bulletins must be adhered to in the course of executing this specification. Copies of these standards and bulletins can be obtained from the CCG Technical Authority.

2.2.2. Canadian Coast Guard Fleet Safety Manual (DFO 5737)

2.2.3. Coast Guard ISM Confined Space Entry 7.D.9

2.2.4. Coast Guard ISM Hotwork procedures

2.2.5. Coast Guard ISM Fall Protection procedures

2.2.6. Canadian Coast Guard Welding Specifications for Ferrous Materials, Revision 4. (TP6151 E)

2.2.7. CWB CSA 47.1 latest revision Division I, II or III

2.2.8. SSPC-SPT

2.2.9 (a) TP 127E-TC Marine Safety Electrical Standards.
(b) IEEE Standard 45 - Recommended Practice for Electrical Installation on Shipboard.

2.3 Regulations

2.3.1. CSA Lifting Appliances

2.3.2. CSA Tackle Regulations

2.3.3. Canada Shipping Act

2.4 Owner Furnished Equipment

2.4.1. The contractor shall supply all materials, equipment, and parts required to perform the specified work unless otherwise stated.

Part 3: TECHNICAL DESCRIPTION:

3.1 General

3.1.1. The contractor shall allow $50,000.00 for the services of a BLM service representative : louis.bibard@nov.com. This shall be adjusted following proof of invoice by 1379.

3.1.2. Prior to starting work on the crane the contractor and ships Electrical Officer shall discuss the best practice for identifying all electrical disconnections and removals. The Electrical Officer will connect a computer to the PLC and record the readings of the various sensors. The crane will need to be fully functional for this procedure. Sensors to be recorded would include boom extension, drum reel monitor, boom angle indication, and load cell. The contractor shall provide a known weight to lift with the hoist to measure the load. The known weight shall be in the range of 4 to 5 ton.

3.1.3. The contractor shall provide a known weight to be suspended from the crane jib crane to enable the service representative to perform a specific rocking test on the slewing ring bearing.

3.1.4. The contractor shall lockout the cranes power supply.

Electrical Maintenance

3.1.5. *Overview:* The crane's sensors shall be removed for inspection and replaced following the work. The sensors are the Drum counter, Anti-two block, Boom angle, Load Cell, and the Spring Loaded Boom Reel.

3.1.6. The cable connecting the main boom reel to the extension boom junction box shall be disconnected at the extension boom junction box and secured on the reel. The junction box is located under a *lead* shield to protect the signals from RFI. This shield shall be removed to access the junction box and upon completion of the work *lead* shield shall be replaced prior to crane operation. Prior to disconnecting wires all terminations shall be identified and recorded for correct terminations.

3.1.7. The Load cell is actually the pin that secures the end of the cable. This load cell shall be carefully disconnected and removed prior to the boom maintenance. Cable terminations shall be properly identified and documented prior to removal. The load cell shall be replaced with new CCG supplied load cell and amplifier. New metal cable hangers shall be installed by the contractor to replace all existing and missing hangers.

3.1.8. The "anti too block" Sensor is the chrome cylinder located at the end of the extension boom. This shall be disconnected, removed and stored until the boom maintenance period is completed. Cable terminations shall be properly identified and documented prior to removal.

3.1.9. The floodlight located under the main boom is to be removed and stored until the boom maintenance is completed. The junction box and junction box glands for this floodlight shall be assessed and replaced as required by the contractor.

3.1.10. The hydraulic cooling fan motor shall be removed to the contractors shop. The contractor shall be responsible for disconnection, reconnecting and alignment issues which may arise during the motors installation. The unit shall be dismantled for cleaning and inspection. On completion of inspection and cleaning the motor windings shall be treated with a vacuum impregnation process or similar process to prevent moisture damage/accumulation in the windings. New bearings shall be installed and the motor reassembled. A one hour bench run shall be completed with bearing temps and motor current readings recorded every 15 minutes. Megger readings shall be taken by the contractor prior to dismantling and upon completion of the one hour bench run. The motor shall be bead blasted, primed and painted. The fan shall be cleaned and inspected prior to installation.

3.1.11. The gearbox cooling fan motor shall be removed and replaced. The contractor shall be responsible for disconnecting, reconnecting and alignment issues which may arise during the motors installation. The replacement motor shall be of equivalent size and horsepower rating as the presently fitted motor, but shall be a totally enclosed configuration and identical in design characteristics to that of the hydraulic cooling fan motor. Motor size shall be determined when the old unit is removed as documentation is limited and it does not appear that any information will be available from the Name Plate. The motor appears to be approx 1 to 1.5 HP range. Megger readings will be taken by the contractor prior to installing the new motor. The old fan will be inspected and assessed.

3.1.12. The main motor, hydraulic circulating pump motor and gearbox oil circulating pump motor shall be removed to the contractors shop. The contractor shall be responsible for disconnecting, reconnecting and transport of the motors as well as motor alignment issues which may arise during the installation of all three units. All three units shall be dismantled for inspection and cleaning, all defects found during the inspection shall be documented. Bell housings bearing bores shall be measured and compared to acceptable dimensions of the bearing. New bearings shall be installed and the motor reassembled. A one hour bench run will be completed by the contractor with bearing temps and current readings recorded every 10 minutes. The contractor shall record the megger readings on all three motors prior to commencement of work and also upon completion of the one hour bench run.

3.1.13. The drum counter sensor shall be removed from the crane body and put in safe storage for reuse. The sensor cable shall be disconnected and marked for correct identification. The unit shall be reinstalled following the work IWO the sensor.

3.1.14. The boom angle indicator shall be removed from the crane body and put in safe storage for reuse. The sensor cable shall be disconnected and marked for correct identification. The unit shall be reinstalled following the work IWO the sensor.

3.1.15. Contractor shall bid on replacing 30 cable hangers and shall include unit cost of each hanger that shall be adjusted up or down for the total hangers required.

3.1.16. The contractor shall allow $5000.00 for purchase of cabling, glands, terminal connectors, and hangers not specified and shall be adjusted up or down upon proof of invoice by 1379.

Mechanical / Hydraulic

3.1.17. The contractor shall drain the oil from the oil reservoir and dispose of the oil to an authorized disposal facility. The quantity of oil is 800 liters of petro Canada Harmony HVI 22. The tank shall be opened up and cleaned. The manhole cover is located in the crane body upper section. The contractor shall supply new oil to fill the tank to its working level.

3.1.18. The gearbox oil tank reservoir and gearbox shall be drained and refilled with new Contractor Supplied oil. The oil shall be disposed of to an authorized disposal facility. The quantity of oil is 100 liters of Petro Canada Traxon 75W90 gear oil.

3.1.19. The contractor shall remove the wire rope from the crane. The end is affixed to the jib head by a pin which is also the load cell. The wire passing through a double sheave block/hook, another double sheave arrangement on the jib head, and a single sheave on the jib head that leads the wire to winch on the crane body. The wire on the winch is affixed to the drum on the last turn. The wire rope shall be laid aside and covered. The double sheave block/hook shall be transported the contractors shop for overhaul, measurement and inspection. The wire rope shall be rigged on the winch and blocks in such a manner to avoid twisting of the cable following the specified work.

3.1.20. The contractor shall disconnect the hydraulic hoses from the crane jib and the cranes hydraulic luffing cylinder to allow the jib to be removed from the crane body.

3.1.21. The hinge pin for the cranes jib and hydraulic luffing cylinder shall be removed to lift the entire jib to the contractor's facility. The hydraulic luffing cylinder shall be supported to the jib during the removal. The weight of the crane jib is 12.11 ton.

3.1.22. Inside the cranes jib is a hydraulic ram unit that provides the telescopic motion of the jibs extension. The ram section of the unit is affixed to the jib and the cylinder moves with the jibs extension. The oil is directed to the cylinder through the center of the ram via a valve block on the ram. The contractor shall remove the access cover from the side of the jib to access the connection of the hydraulic ram. The contractor shall remove the pin that secures the ram to jib and the hoses to the valve block. The extension of the jib shall be removed from the jib and laid aside.

3.1.23. The contractor shall the remove the valve block on the ram of the extension cylinder to allow the ram to be removed from the cylinder. The ram shall be removed and a new seal kit installed, then re-assembled. A new seal shall be installed in the valve block and then reassembled on the ram. Owner shall supply new seal kit and seal.

3.1.24. The Teflon guide plates that provide a bearing surface for the extension jib shall be removed and replaced with new pieces and new screws. There are 15 pieces in total and 100 countersunk screws.

3.1.25. The hydraulic luffing ram unit shall be removed from the crane jib. The pin for the ram shall be removed to allow the removal and overhaul of the ram. The ram shall be disassembled and a new seal kit installed, then reassembled. Owner shall supply new seal kit. The main control valve block shall be replaced with new CCG supplied valve block.

3.1.26. The four removed pins and the bearing bores of the respective pins shall be thoroughly cleaned and laid out for inspection. All grease passages shall be proven clear. The diameters of the same shall be measured at points over the length and recorded. Records of measurements shall be recorded and given to the Chief Engineer. The units shall be reassembled ensuring that all parts are thoroughly greased prior to reassembly. Greasing arrangement shall be proven free and witnessed by the owner's representative.

3.1.27. The two sets of jib head sheaves, one double sheave set and one single sheave set shall be disassembled cleaned and laid out for inspection. The sheaves run on tapered roller bearings between the pins and sheave bores. The pins and sheave bore diameters shall be measured at points over the length and recorded. All grease passages shall be proven clear. Records of measurements shall be recorded and given to the Chief Engineer. New bearings and seals shall be replaced with new CCG supplied parts. The units shall be reassembled ensuring that all parts are thoroughly greased prior to reassembly. Greasing arrangement shall be proven free and witnessed by the owner's representative.

3.1.28. The main double sheave block with hook shall be disassembled, cleaned, and laid out for inspection. The swivel hook shall be disassembled, cleaned, and laid out for inspection. The pins and sheave bore diameters shall be measured at points over the length and recorded. All grease passages shall be proven clear. The hook pin and bearing bores shall have the diameters measured and recorded. The hook shall be removed from the hook pin and the seal at the bottom of the hook shaft shall be replaced with a new owner supplied seal. Records of measurements shall be recorded and given to the Chief Engineer. The units shall be reassembled ensuring that all parts are thoroughly greased prior to reassembly. Greasing arrangement shall be proven free and witnessed by the owner's representative.

3.1.29. The entire jib assembly shall be reassembled as originally found ensuring all areas that require grease are thoroughly greased prior to reassembly. Includes all hoses and wiring that was removed to access the removal of the jib.

3.1.30. The three resilient mounting assemblies that support the operator's cab shall be replaced with new assemblies. One located on the top of the cab and two located under the cab. The upper and lower mounting assemblies differ slightly in design. The assemblies consist of part items 2 thru 17 on the reference drawing. Parts will be CCG supplied. The crane cab will have to be slightly lifted and supported to exchange the mounts.

Slewing Ring / Bearing

3.1.31. The contractor shall remove the 60 exterior studs from the slewing ring and replace with new owner supplied studs, nuts, washers and long spacers. The 60 interior bolts in the crane tower shall be checked for tightness. A hydraulic bolt tensioner shall be used to tighten all fasteners. The procedure for tightening these bolts shall be provided by the FSR.

Hoisting Motor / Brake

3.1.32. The contractor shall provide a separate quote for the removal and overhaul of the hoisting winch assembly if deemed necessary by the FSR. Remove the hydraulic hoses from the hoisting winch hydraulic motor. Drain oil from the gearbox and dispose. Remove the hoisting winch hydraulic motor assembly and store in a safe location. Cover all open hydraulic ports to prevent ingress of debris into the motor. The gearbox shall be removed from the drum end and transported to the yards facility for overhaul. The gearbox shall be disassembled and laid out for inspection. The bearing housing bores shall be measured and compared to acceptable tolerances for the bearings. The hoisting drum shaft and bearings shall be removed from the crane supports and the drum to be supported at the crane tower. The drum shaft shall be cleaned, inspected and replaced with CCG supplied shaft if necessary. The entire assembly shall be reassembled with CCG supplied bearings and seals as originally found. The cover gasket for the hoist winch gearbox shall be replaced with a new gasket. The gearbox shall be refilled with new CCG supplied oil. Sealing surfaces shall be cleaned prior to replacing gasket.

Grease Tubing

3.1.33. The contractor shall remove all stainless steel tubing fitted to the jib and crane body and install new tubing and fittings. The tube runs from an accessible block on the crane body to remote areas of the jib and crane body. Some of these lines are disconnected from the grease points and fitted with nipples. The new lines shall be reconnected to there respective points. Allow fifty brackets to be removed and 75 meters of 1/8" diameter tubing. All grease lines shall be pumped full of grease and proven clear before permanently tightened and witnessed by the owners representative.

Hydraulic Hose and Fitting Replacement

3.1.34. The contractor shall have an allowance $10,000.00 for hydraulic fittings, pipes, hoses, and miscellaneous fittings for the work specified. This shall be adjusted up or down by 1379 upon receipt of invoice. All exterior hydraulic hoses (~24 in total) shall be replaced with new hoses. Hoses shall be pressure tested and provided with test certificates. All hoses and attached fittings shall be wrapped with Denso Petroleum tape following the work and function test.

3.1.35. All hydraulic fittings, hoses and pipes removed during the work shall be capped or plugged to prevent contamination of the hydraulic system.

3.1.36. The contractor shall assemble all removed equipment and fit to the crane as originally found before the start of work. All parts requiring lubrication shall be thoroughly greased before reassembly.

3.2 Location

3.2.1. Main Deck Port Side

3.3 Interferences

3.3.1 Contractor is responsible for the identification of interference items, their temporary removal, storage and refitting to vessel.

Part 4: PROOF OF PERFORMANCE:

4.2 Inspection

4.1.2. All work shall be completed to the satisfaction of the Chief Engineer and ABS.

4.2 Testing

4.2.1. The contractor shall obtain the services of a Trihedral Field Service Representative , Bedford Nova Scotia for the load testing of the crane. These people installed the PLC for the crane and would be pertinent to be on site to witness all parameters while loading the crane and readjustments if necessary.
4.2.2. The contractor shall supply weights that range from 5 ton to 40 ton and a current calibrated measuring device to perform the load tests. The tests will vary at different loads to enable calibration of the electronics.
4.2.3. There are several safety features of the crane that shall be proven correct and witnessed by the FSR, Chief Engineer & ABS. Some of these include End Of wire Stop, Slack Wire Stop, Boom Angle Limits, Slewing Limits, Extension Limits, Loads at different boom angles and extensions, Anti Two Block.
4.2.4. Any leaks as a result from the work shall be corrected by the contractor.
4.2.5. The contractor shall have ABS to witness the load test.

4.3 Certification

Certificates for weights used shall be given to the Chief Engineer.

Part 5: DELIVERABLES:

5.1 Drawings/Reports

5.1.1 The FSR shall provide a written report in Electronic Format of all the work that was performed on the crane and indicate problems that were found. All measurements shall be recorded and included in the report.

5.2 Spares N/A

5.3 Training N/A

5.4 Manuals N/A

Spec item #: HD-05	**SPECIFICATION**	TCMSB Field #: N/A
Seabay Maintenance		

Part 1: SCOPE:

1.1 The intent of this specification shall be to open the suction and discharge sea bays cleaning, painting, ABS inspection and the installation of anodes. Contractor shall ensure marine chemist certificates for these areas for confined space entry and hot-work are obtained and kept valid as per the General & Safety Notes.

1.2 This work shall be carried out in Conjunction with the following:

- Sea Valve Maintenance
- Central Cooling and Seawater Valve replacement
- Seawater Impressed current anode system
- Bubbler Piping Inspection

Part 2: REFERENCES:

2.1 Guidance Drawings/Nameplate Data

2.1.1. Tank Capacity Plan Drawing # T13 1027
2.1.2. Suction Sea Bay Volume 45 m^3, Area 210 m^2
2.1.3. Discharge Sea Bay Volume 44 m^3, Area 200 m^2

2.2 Standards

2.2.1. The following Coast Guard Standards and or Technical Bulletins must be adhered to in the course of executing this specification. Copies of these standards and bulletins can be obtained from the CCG Technical Authority.
2.2.2. Canadian Coast Guard Fleet Safety Manual (DFO 5737)
2.2.3. Coast Guard ISM Confined Space Entry 7.D.9
2.2.4. Coast Guard ISM Hotwork procedures
2.2.5. Coast Guard ISM Fall Protection procedures
2.2.6. Canadian Coast Guard Welding Specifications for Ferrous Materials, Revision 4. (TP6151 E)
2.2.7. CWB CSA 47.1 latest revision Division I, II or III
2.2.8. SSPC-SPT
2.2.9. (a) TP 127E-TC Marine Safety Electrical Standards.

2.2.10. (b) IEEE Standard 45 - Recommended Practice for Electrical Installation on Shipboard.

2.3 Regulations

2.3.1. Canada Shipping Act.

2.4 Owner Furnished Equipment

2.4.1. The contractor shall supply all materials, equipment, and parts required to perform the specified work unless otherwise stated.

Part 3: TECHNICAL DESCRIPTION:

3.1 General

3.1.1. There is 1 docking plug each for the suction and discharge sea bays. The docking plugs shall be removed to drain water from the sea bays during the work. On completion of all work, docking plugs shall have threads dressed and coated with white lead. Thread Tap shall be run through holes and docking plugs installed in good order.

3.1.2. Access to the suction and discharge sea bays is by removal of tank top manhole covers located to the starboard side of the Lower Forward Machinery Compartment, suction sea bay cover Frame 99 – 102, Discharge Sea bay cover Frame 102 – 105.

3.1.3. The Seabays shall be gas freed for entry and hotwork and certified by Marine Chemists. The spaces shall be certified gas free during the entire period of the work description.

3.1.4. All internal surfaces of the forward and after sea bays shall be cleaned of all loose rust, dirt, debris and marine growth by means of high pressure fresh water wash.

3.1.5. Contractor shall be remove all debris and dispose of ashore. After cleaning is completed, Contractor shall arrange for inspection with Chief Engineer and ABS prior to mechanical cleaning and painting.

3.1.6. IMPORTANT: The forward bulkhead in the discharge sea-bay at frame 105 and the aft bulkhead in the suction sea-bay at frame 99 are contiguous with tanks containing fuel / lubricating oils. CONTRACTOR SHALL ENSURE THERE IS NO BURNING OR WELDING CARRIED OUT ON THESE BULKHEADS. CONTRACTOR SHALL ADVISE ALL WORKERS IN THIS AREA OF THE POTENTAIL HAZARDOUS SITUATION.

3.1.7. Contractor shall quote on renewing 20 sacrificial anodes in each sea bay and replacing with 20 x 10 lb anodes per sea bay, total of 40 anodes required. Contractor shall quote a unit cost per anode for adjustment purposes. Old anodes shall be removed before cleaning and painting. New anodes (CFM) shall be spot welded in place after paint has cured.

3.1.8. Contractor shall mechanically clean 80 square meters in each of the two seabay internals to SSPC-SP3 or hand-tool clean SSPC-SP2. Before paint application, all surfaces shall be clean, dry and free of all contaminants including salt deposits. Surface preparation and paint application shall be to manufacturer's recommendations. All debris shall be removed prior to painting. A separate quote for unit cost per square meter for paint and preparation shall be included and adjusted by PWGSC 1379 action if different from the 80 square meters.

3.1.9. Sea-bay internals and applicable surface areas shall be stripe coated before painting to ensure all hard to reach areas are coated. After striping, sea-bay internals shall be given 2 coats of Amerlock 2 of contrasting colours, with the final coat a light colour. Each coat shall be 5 to 8 mil D.F.T.

3.1.10. Contractor shall supply all ventilation to ensure the complete drying of the first and second coats and also to protect against condensation and humidity.

3.1.11. On completion of all work, sea bays shall be inspected by Chief Engineer & ABS prior to closing up. Manhole covers shall be securely refitted after final inspection. Contractor shall supply and fit new ¼" neoprene gaskets (CFM) on all manhole covers and apply anti-seize compound to all securing studs.

3.1.12. All ventilation equipment and materials required to carry out above work shall be provided by the Contractor.

3.1.13. Bilge area at tank top level in these areas shall be left in "an as clean as found" condition on completion of the work.

3.2 Location

3.2.1. Suction Sea Bay Frame 99 – 102, Double Bottom

3.2.2. Discharge Sea Bay Frame 102 – 105, Double Bottom

3.3 Interferences

3.3.1 Contractor is responsible for the identification of interference items, their temporary removal, storage and refitting to vessel.

Part 4: PROOF OF PERFORMANCE:

4.1 Inspection

4.1.1. All work shall be completed to the satisfaction of the Chief Engineer & ABS.

4.1.2. ABS Hull surveyor shall inspect the spaces before coatings are applied.

4.2 Testing

N/A

4.3 Certification

N/A

Part 5: DELIVERABLES:

5.1 Drawings/Reports

5.1.1 The Contractor is to provide a written report to the Chief Engineer detailing the information of the work performed with this item.

5.2 Spares

N/A

5.3 Training

N/A

5.4 Manuals

N/A

Spec item #: HD-06	**SPECIFICATION**	TCMSB Field #: N/A
Marcelo Anodes Anti Fouling / Anti Corrosion		

Part 1: SCOPE:

1.1 The intent of this specification shall be to perform maintenance on the impressed current anodes system for the vessel's seawater cooling system. Install new control panels for the anodes. Work shall be done under the supervision of EMCS Industries, Sydney British Columbia and they shall survey system for upgrades, replacement and wiring. This service shall be priced separately.

1.2 This work shall be carried out in Conjunction with the following:

- Seabox and Seabay Maintenance

Part 2: REFERENCES:

2.1 Guidance Drawings/Nameplate Data

2.1.1. Service Manual – Marelco Anti Fouling Impressed Current Seaboxes and Seabays
2.1.2. Electrolytic Protection Drawing # 68-00-02

2.2 Standards

2.2.1. The following Coast Guard Standards and or Technical Bulletins must be adhered to in the course of executing this specification. Copies of these standards and bulletins can be obtained from the CCG Technical Authority.
2.2.2. Canadian Coast Guard Fleet Safety Manual (DFO 5737)
2.2.3. Coast Guard ISM Confined Space Entry 7.D.9
2.2.4. Coast Guard ISM Hotwork procedures
2.2.5. Coast Guard ISM Fall Protection procedures
2.2.6. Canadian Coast Guard Welding Specifications for Ferrous Materials, Revision 4. (TP6151 E)
2.2.7. CWB CSA 47.1 latest revision Division I, II or III
2.2.8. SSPC-SPT
2.2.9. (a) TP 127E-TC Marine Safety Electrical Standards.
2.2.10. (b) IEEE Standard 45 - Recommended Practice for Electrical Installation on Shipboard.

2.3 Regulations

2.3.1. Canada Shipping Act.

2.4 Owner Furnished Equipment

2.4.1. The contractor shall supply all materials, equipment, and parts required to perform the specified work unless otherwise stated.

Part 3: TECHNICAL DESCRIPTION:

3.1 General

3.1.1. Contractor to allow $15,000.00 in the bid cost for the services of the sub-contractor in addition to the cost of contractor's own work. Final cost shall be adjusted upon proof of invoice from the service provider by 1379 procedure.

3.1.2. New anodes and control panels shall be installed under the direction of a Marelco representative. The Marelco representative shall be arranged for by the Contractor. The suggested Marelco representative shall supervise installation and commissioning of the new anodes. The sub-contractor shall be arranged for two separate visits, one for the installation and one for the commissioning aft refloating the vessel.

Contact: Trevor Tasker
ECMS Industries (Marelco)
E: ttasker@emcsindustries.com
Commercial: www.emcsindustries.com |
T: 250.656.5366 ext 206 |C: 604.816.8881 |F: 250.656.5344 |
Unit 2, Martman Industrial Park, 2042 Mills Rd W, Sidney, BC, V8L 5X4, Canada

3.1.3. Contractor shall inspect and replace designated Marelco system anodes located in the sea boxes and sea bays. Contractor shall replace all 24 anodes – 14 copper, and 10 aluminum.

3.1.4. New anodes (GSM) will be CCG supplied. All anodes shall have watertight glands repacked.

3.1.5. New Marelco anodes are fitted in the following locations:

Port Seabox: 5 Copper, 5 aluminium
Starboard Seabox: 5 copper, 5 aluminum
Suction sea bay: 1 copper
Discharge sea bay: 3 copper

3.1.6. All anode cables and new anodes shall be tested for continuity before starting work and after replacement. Coast Guard will electrically isolate system before any work is started. Prior to the removal of any anode, the cables terminated within the anode safety cap shall be mechanically disconnected – **NOT CUT**. Connections shall presently be bolted together.

3.1.7. All Marelco system anodes removed shall be stored on the ship in a location as directed by Chief Engineer. NOTE: Contractor shall remove the port & starboard seabay vent pipes for access to some of the port & starboard seabox anodes.

3.1.8. Prior to installation of new anodes, the mounting surface shall be cleaned completely of any corrosion and dirt and dried to ensure a watertight seal. The anodes shall be installed as per mounting instructions attached and at the direction of the service representative. The mounting bolt on each anode shall be torqued to a minimum value of 100 ft-lbs.

3.1.9. Electrical connection of the anode lead and control power cable is with a nut and a bolt. Connections shall be tight and clean. A suitable compound electrical tape shall be used to bind the connection with a final binding of vinyl electrical tape to ensure waterproof integrity.

3.1.10. After any defective cable shall removed and before any new cabling is installed, the Contractor shall air test the conduit piping to ensure the conduit pipe to the anode terminal box is watertight. Air testing shall be carried out at the kick plate connections for the anodes located aft of the DG sets in the Forward Upper Machinery Compartment. After new cabling has been installed, Contractor shall quote on pumping 5 kg of Vaseline into conduit piping through grease fittings on the kick plate connections.

3.1.11. New owner supplied o-rings, 2 per anode, shall be installed in the replaced anode safety caps. Contractor shall fill the safety caps with a silicone, non-conducting grease (CFM) upon completion of all work. Suitable anti-seize compound shall be used on the threads of safety caps prior to installing and tightening.

3.1.12. The two existing control panels, one port and one starboard, shall be removed from the supporting bracket and laid aside for CCG personal. The cabling shall be disconnected from the panels and identified by labelling each conductor. The two new panels shall be installed to existing brackets and the wires reconnected under the supervision of the FSR.

3.1.13. System shall be calibrated by service representative after power has been restored when the vessel is re-floated.

3.1.14. Note: See cleaning of sea boxes and sea bays and for replacement of sacrificial anodes during this work, also for the required marine chemist certificates for confined space entry and hot work.

3.1.15. Chief Engineer shall receive three (3) type written copies of report from service engineer for work carried out on this system.

3.2 Location

3.2.1. Port and Starboard Seaboxes

3.2.2. Forward and Aft Seabays

3.3 Interferences

3.3.1 Contractor is responsible for the identification of interference items, their temporary removal, storage and refitting to vessel.

Part 4: PROOF OF PERFORMANCE:

4.1 Inspection

4.1.1. All work shall be completed to the satisfaction of the Chief Engineer, ABS and the FSR for the specified work.

4.2 Testing

N/A

4.3 Certification

N/A

Part 5: DELIVERABLES:

5.1 Drawings/Reports

5.1.1 Chief Engineer shall receive three (3) type written copies of report from service engineer for work carried out on this system.

5.2 Spares

N/A

5.3 Training

N/A

5.4 Manuals

N/A

Spec item #: HD-07	**SPECIFICATION**	TCMSB Field #: N/A
Fuel Tank #2 DB Port & Stbd Cleaning / Inspection / Testing		

Part 1: SCOPE:

1.1 The intent of this specification shall be to open; gas free and clean the identified tanks suitable for ABS inspection. Tanks shall be credited for a five year survey.

1.2 This work shall be carried out in Conjunction with the following:

Part 2: REFERENCES:

2.1 Guidance Drawings/Nameplate Data

2.1.1. Tank Capacity Plan # T13-1027
2.1.2. 07-07-04_05 FR 1,2, 3 Double Bottom Unit Fr 60- 79
2.1.3. 07-07-06_07 FR 1,2, 3 Double Bottom Unit Fr 80-99 P&S
2.1.4. 07-00-03 FR 1& 2 Tank Top

2.2 Standards

2.2.1. The following Coast Guard Standards and or Technical Bulletins must be adhered to in the course of executing this specification. Copies of these standards and bulletins can be obtained from the CCG Technical Authority.
2.2.2. Canadian Coast Guard Fleet Safety Manual (DFO 5737)
2.2.3. Coast Guard ISM Confined Space Entry 7.D.9
2.2.4. Coast Guard ISM Hotwork procedures
2.2.5. Coast Guard ISM Fall Protection procedures
2.2.6. Canadian Coast Guard Welding Specifications for Ferrous Materials, Revision 4. (TP6151 E)
2.2.7. CWB CSA 47.1 latest revision Division I, II or III
2.2.8. SSPC-SPT
2.2.9. (a) TP 127E-TC Marine Safety Electrical Standards.

2.2.10. (b) IEEE Standard 45 - Recommended Practice for Electrical Installation on Shipboard.

2.3 Regulations

2.3.1. Transport Canada Hull Construction Regulations.

2.4 Owner Furnished Equipment

2.4.1. The contractor shall supply all materials, equipment, and parts required to perform the specified work unless otherwise stated.

Part 3: TECHNICAL DESCRIPTION:

3.1 General

3.1.1. The following tanks are to be addressed as per this specification;

- No 2 Double Bottom Stbd 127 m3 Fr 60 – 94
- No 2 Double Bottom Stbd 127 m3 Fr 60 - 94

3.1.2. The Chief Engineer will advise the Contractor which tanks are available for cleaning to allow adequate time for ships staff to transfer fuel. The tanks will be pumped as low as possible.

3.1.3. # 2 Fuel Oil DB tanks are located under the main engines. Accessibility in these tanks is difficult as the tanks are only 1.1 meters high with exception of the outboard, forward and aft section. Each tank is fitted with six manhole covers to assist in accessibility.

3.1.4. Contractor shall quote for the removal and disposal of estimated 3 m^3 of oil/sludge for each tank. The disposal of all residues from the tanks must be by a licensed waste oil disposal company. The total amount of residue, excluding residue from water washing of tanks, shall be totaled and amount given to Chief Engineer. Contractor shall supply the name of the collection and disposal company to the Chief Engineer. Contractor shall quote unit cost for removal and disposal of 1 m^3 of oil/sludge for PWGSC 1379 adjustment. Contractor shall provide an accurate means of measuring the removed residue through the use of flow meters or tank sounding devices.

3.1.5. Contractor shall supply all ventilation and lighting equipment required for the Hot-Work certificates and maintain the equipment for the duration of the work. Gas-free/Hot-Work certificates shall be renewed as required. Contractor shall quote a unit cost to gas-free a fuel oil tank for PWGSC 1379 adjustment.

3.1.6. Contractor shall remove manhole covers for access to tanks and install covers in good order after the final inspection by the Chief Engineer. All dirt and debris found in tanks shall be removed ashore and disposed of by Contractor to an approved location.

3.1.7. The tank internals are to be 100 percent high pressure washed at 3000 psi minimum. All water and residue from tank washing shall be pumped ashore and disposed of by Contractor. Tanks shall be thoroughly wiped down with lint-free clean rags and all sludge deposits scraped off and disposed. During the water washing process, contractor will take care not to direct a stream of water at a tank's level transducer. Each level transducer is located at Frame 77 centerline the level transducers must be covered up prior to any water washing of the tank.

3.1.8. After cleaning and removal of all rags, debris, Contractor shall arrange with ABS for inspection and inform Chief Engineer prior to their arrival.

3.1.9. Contractor shall remove protective covers from the level transducers.

3.1.10. After tank cleaning is completed, while gas-free certificate is still valid, CCG personnel will be inspecting tank gauging level sensors in tanks. After sensors are inspected, CCG will advise Contractor when tanks can be closed up.

3.1.11. Tanks shall be tested with air pressure at 1.5 PSI by Contractor to the satisfaction of the attending ABS Surveyor. All tests shall be witnessed by the Chief Engineer as well as the ABS surveyor. The quote shall include the installation and removal of blanks/balloons for suctions, sounding pipes, overflow pipes with check valves, vent head removal and additional tank entries for subsequent balloon/blank adjustments. Contractor shall advise Chief Engineer prior to reinstalling manhole cover after successful pressure test so that the Chief Engineer may view the tank.

3.1.12. Before any tank is closed up, the manhole covers shall be inspected by the Chief Engineer. All tank fasteners shall be wire brushed clean and coated with an approved anti-seize compound. Contractors shall include in quotation to supply and install new ¼ inch thick neoprene gaskets for replacement on all 12 covers. The center of the gaskets inside the bolted flange surface shall be cut out.

Part 4: PROOF OF PERFORMANCE:

4.1 Inspection

All work shall be completed to the satisfaction of the Chief Engineer & ABS.

4.2 Testing

All testing shall be witnessed by ABS and Chief Engineer.

4.3 Certification

Certified Chemist to Gas free tanks.

Part 5: DELIVERABLES:

5.1 Drawings/Reports

5.1.1 The Chief Engineer shall receive a typed written report in electronic format for work carried out on these tanks.

5.2 Spares

N/A

5.3 Training

N/A

5.4 Manuals

N/A

Spec item #: HD-08	**SPECIFICATION**	TCMSB Field #: N/A
Seabox Maintenance		

Part 1: SCOPE:

1.1 The intent of this specification shall be to open the port and starboard sea boxes for cleaning, coating repair, and ABS inspection. Contractor shall ensure marine chemist certificates for these areas for confined space entry and hot-work are obtained and kept valid as per the Coast guard Fleet Safety manual.

1.2 This work shall be carried out in Conjunction with the following:

- Bubbler Piping Inspection
- Sea Valve Maintenance
- Seawater Impressed current anode system
- Various Survey Spec and ABS Special Survey.

Part 2: REFERENCES:

2.1 Guidance Drawings/Nameplate Data

2.1.1. Port Sea Box Volume 70 m^3
2.1.2. Starboard Sea Box Volume 70 m^3
2.1.3. Tank Capacity Plan Drawing # T13 1027
2.1.4. Shell Expansion

2.2 Standards

2.2.1. The following Coast Guard Standards and or Technical Bulletins must be adhered to in the course of executing this specification. Copies of these standards and bulletins can be obtained from the CCG Technical Authority.
2.2.2. Canadian Coast Guard Fleet Safety Manual (DFO 5737)
2.2.3. Coast Guard ISM Confined Space Entry 7.D.9
2.2.4. Coast Guard ISM Hotwork procedures
2.2.5. Coast Guard ISM Fall Protection procedures
2.2.6. Canadian Coast Guard Welding Specifications for Ferrous Materials, Revision 4. (TP6151 E)
2.2.7. CWB CSA 47.1 latest revision Division I, II or III
2.2.8. SSPC-SPT
2.2.9. (a) TP 127E-TC Marine Safety Electrical Standards.

2.2.10. (b) IEEE Standard 45 - Recommended Practice for Electrical Installation on Shipboard.

2.3 Regulations

2.3.1. Hull Construction Regulations CSA

2.4 Owner Furnished Equipment

2.4.1. The contractor shall supply all materials, equipment, and parts required to perform the specified work unless otherwise stated.

Part 3: TECHNICAL DESCRIPTION:

3.1 General

3.1.1. Cleaning of sea boxes is not to be carried out until the completion of hull pressure washing and hull grit blasting, unless suitable internal protection is provided.

3.1.2. Access to sea boxes is by removal of manhole covers located on the Main Deck: port sea box manhole which is located in the Incinerator Compartment (frame 100 port); starboard sea box manhole cover is located in the starboard engine room entrance, forward of the day tank (frame 100 starboard).

3.1.3. Each sea box comprises an inner and outer sea box with a longitudinal division plate extending vertically 3/4 the height of the compartment.

3.1.4. All inlet grids and internal sea box and sea bay surface areas shall be thoroughly cleaned by high pressure fresh water washing to remove all loose scale, paint, marine growth etc. Debris from this cleaning shall be removed from ship and disposed of ashore on a daily basis.

3.1.5. Grid holes in shell and all manhole covers shall be cleaned by hydro-blasting or reaming using a close fitting drill. Diameter of each grid hole perforation is 25 mm.

3.1.6. Upon completion of fresh water pressure washing and disposal of debris from the sea boxes and sea bays, Contractor shall arrange for inspection with Chief Engineer and ABS.

3.1.7. In each outer sea box lower area as designated by the Chief Engineer, Contractor shall renew the remaining 8 fitted sacrificial anodes four (4) x 40 lb. sacrificial anodes in each outer sea box. Total of eight x 40 lb. anodes shall be replaced.

3.1.8. IMPORTANT: The aft bulkhead in each sea-box at frame 99, port & starboard sides, is contiguous with tanks containing fuel oil. CONTRACTOR SHALL ENSURE THERE IS NO BURNING OR WELDING CARRIED OUT ON THESE BULKHEADS. CONTRACTOR SHALL ADVISE ALL WORKERS IN THESE AREAS OF THE POTENTAIL HAZARDOUS SITUATION.

3.1.9. Contractor shall quote on mechanically cleaning and painting 50 m² in each sea box internal surfaces (100 m² Total), including bubbler pipe-work passing through sea boxes, suitable for application of two (2) coats of Amercoat 339 coating. Surface preparation and paint application shall be to manufacturer's recommendations. Power-tool clean to SSPC-SP3 or hand-tool clean SSPC-SP2. Before paint application, all surfaces shall be clean, dry and free of all contaminants including salt deposits. The contractor is advised that any over-millage condition will result in improper curing and subsequent potable water contamination. The contractor shall quote a unit cost for preparation and coating per one m² for 1379 PWGSC adjustment purposes.

3.1.10. When mechanical scaling and cleaning is being done, a temporary cover for each sea-box manhole cover shall be fitted by Contractor. During this cleaning Contractor will install an extraction fan on each sea-bay inlet grid or sea-box ventilation pipe to create a negative pressure in the sea-box to prevent dirt & debris from the mechanical cleaning from entering the Incinerator Compartment or the Engine Room change area as applicable. The following pipe outlets in each sea-box shall also be temporarily covered to prevent the ingress of dirt & debris during scaling & cleaning operations: main suction, inner & outer sea-box discharges, evaporator brine overboard, fire monitor inlet.

3.1.11. Contractor shall follow paint manufacturer's recommendations for surface preparation, application and curing are strictly adhered to.

3.1.12. On completion of all work, sea boxes shall be inspected by Chief Engineer prior to closing up. Manhole covers shall be securely refitted after final inspection. Contractor shall supply and fit new ¼" neoprene gaskets (CFM) on all manhole covers and apply anti-seize compound to all securing studs.

3.1.13. All staging, ventilation equipment and materials required to carry out above work shall be provided by Contractor.

3.1.14. All equipment in the Incinerator Compartment, starboard Engine Room casing entrance and passageways through Winch Compartment shall be protected against dirt and damage during the time this work is in progress. These areas shall be left in "an as clean as found" condition on completion of the work.

3.2 Location

3.2.1.	Port Sea Box	99 – 105
3.2.2.	Starboard Sea Box	99 – 105

3.3 Interferences

3.3.1 Contractor is responsible for the identification of interference items, their temporary removal, storage and refitting to vessel.

Part 4: PROOF OF PERFORMANCE:

4.1 Inspection

4.1.1. All work shall be completed to the satisfaction of the Chief Engineer.

4.1.2. ABS Hull surveyor shall inspect the spaces before coatings are applied.

4.2 Testing

N/A

4.3 Certification
N/A

Part 5: DELIVERABLES:

5.1 Drawings/Reports

5.1.1 The Chief Engineer shall receive a typed written report in electronic format for work carried out.

5.2 Spares
N/A

5.3 Training
N/A

5.4 Manuals
N/A

Spec item #: HD-9	**SPECIFICATION**	TCMSB Field #: N/A
Port Sterntube Strut Permanent Repair		

Part 1: SCOPE:

1.1 The intent of this specification shall be to inspect and test the weld repair on the inboard side of the port sterntube strut and the covering plate on the outboard side.

1.2 The contractor shall obtain the services of a weld inspection authority to test the weld repair.

1.3 This work shall be carried out in Conjunction with the following:

Part 2: REFERENCES:

2.1 Guidance Drawings/Nameplate Data

2.1.1. Skeg IWO Shaft Brackets # 07-12-10_11, 8 sheets

2.2 Standards

2.2.1. The following Coast Guard Standards and or Technical Bulletins must be adhered to in the course of executing this specification. Copies of these standards and bulletins can be obtained from the CCG Technical Authority.

2.2.2. Canadian Coast Guard Fleet Safety Manual (DFO 5737)

2.2.3. Coast Guard ISM Confined Space Entry 7.D.9

2.2.4. Coast Guard ISM Hotwork procedures

2.2.5. Coast Guard ISM Fall Protection procedures

2.2.6. Canadian Coast Guard Welding Specifications for Ferrous Materials, Revision 4. (TP6151 E)

2.2.7. CWB CSA 47.1 latest revision Division I, II or III

2.2.8. SSPC-SPT

2.3 Regulations

2.3.1. Canada Shipping Act.

2.4 Owner Furnished Equipment

2.4.1. The contractor shall supply all materials, equipment, and parts required to perform the specified work unless otherwise stated.

Part 3: TECHNICAL DESCRIPTION:

3.1 General

3.1.1. Contractor shall provide man-lift equipment or scaffolding to access the port sterntube strut for testing, inspection, and preparation work.

3.1.2. Coatings shall be power tooled cleaned IWO weld repairs. Allow for 3 linear meters and 100mm beyond the weld extents and 100mm each side of the welds. Welds shall be cleaned to allow for UT and MPI tests.

3.1.3. ABS and Chief Engineer shall inspect the welds and witness the tests.

3.1.4. Following the results from the testing and inspection, ABS will determine how we proceed.

3.1.5. The damaged coating areas shall be prepared for the application of the International Inerta coating. Damaged areas shall be coated with the Inerta System.

3.2 Location

3.2.1. Bossing plate port side (approx. Frame 13.5-16.5 inboard side)

3.2.2. Bossing connection to tube port side (approx. Frame 22) 4

3.2.3. Closing plate port side (approx. Frame 19-21 outboard side)

3.3 Interferences

3.3.1 Contractor is responsible for the identification of interference items, their temporary removal, storage and refitting to vessel.

Part 4: PROOF OF PERFORMANCE:

4.1 Inspection

4.1.1. All work shall be completed to the satisfaction of the Chief Engineer.

4.2 Testing

N/A

4.3 Certification

N/A

Part 5: DELIVERABLES:

5.1 Drawings/Reports

5.1.1 The Chief Engineer shall receive a typed written report in electronic format for work carried out.

5.2 Spares

N/A

5.3 Training

N/A

5.4 Manuals

N/A

Spec item #: E-01	**SPECIFICATION**	TCMSB Field #: N/A
SS Generator Diesel Fuel Supply & Return Modification		

Part 1: SCOPE:

1.1 The intent of this specification shall be to separate the common fuel supply and return pipes to the port and starboard generator diesels. Install an additional supply and return pipe to the Generator Fuel Oil Head Limiting tank to allow the port and starboard diesels to have individual supply and return pipes.

1.2 This work shall be carried out in Conjunction with the following:

Part 2: REFERENCES:

2.1 Guidance Drawings/Nameplate Data

2.1.1. Toromont Cat – D/G Set D.O. Head Limiting Tank # 091460M102
2.1.2. Toromont Cat – Diagram of D/G Set F/O System Piping # 091460M107

2.2 Standards

2.2.1. The following Coast Guard Standards and or Technical Bulletins must be adhered to in the course of executing this specification. Copies of these standards and bulletins can be obtained from the CCG Technical Authority.
2.2.2. Canadian Coast Guard Fleet Safety Manual (DFO 5737)
2.2.3. Coast Guard ISM Confined Space Entry 7.D.9
2.2.4. Coast Guard ISM Hotwork procedures
2.2.5. Coast Guard ISM Fall Protection procedures
2.2.6. Canadian Coast Guard Welding Specifications for Ferrous Materials, Revision 4. (TP6151 E)
2.2.7. CWB CSA 47.1 latest revision Division I, II or III
2.2.8. SSPC-SPT
2.2.9. (a) TP 127E-TC Marine Safety Electrical Standards.

2.2.10. (b) IEEE Standard 45 - Recommended Practice for Electrical Installation on Shipboard.

2.3 Regulations

2.3.1. Canada Shipping Act.

2.4 Owner Furnished Equipment

2.4.1. The contractor shall supply all materials, equipment, and parts required to perform the specified work unless otherwise stated.

Part 3: TECHNICAL DESCRIPTION:

3.1 General

3.1.1. The fuel in the tank will be drained to the drain level by the ship's crew.

3.1.2. The fill valves shall be isolated and locked out. The generator diesels shall be locked out.

3.1.3. The tank shall be opened up by the top manhole cover. The tank internals shall be cleaned and gas freed for hotwork. The tank is fitted with a float valve assembly.

3.1.4. The existing arrangement has one supply connection and one return connection to the starboard side of the head limiting tank. One additional supply and return connection shall be fitted to the same side of the tank. A penetration shall be made to fit 1 inch diameter schedule 40 steel pipe for the new supply, 4 inches up from the bottom of the tank, 3 inches aft from the forward side of the tank. The pipe shall pass through the tank side and to be welded inside and outside the tank wall. A slip-on weld flange shall be fitted to the end of the pipe to give a 3 inch distance from the face of the flange to the tank wall. A 1 inch diameter quick closing valve (CCG Supplied) shall be fitted to the new supply flanged connection.

3.1.5. A penetration shall be made to fit a 1 inch diameter half coupling, 3000#, SCRD, 3 inches down from the top of the tank and 3 inches forward from the aft side of the tank. The half coupling shall pass through the tank wall and to be welded inside and outside the tank.

3.1.6. Two deck penetrations shall be cut in the deck of the generator flat to allow the new supply and return pipes to pass through. The penetration collars shall be fitted with compensation collars and welded below and above the deck. The location shall be starboard of the head limiting tank adjacent to the existing supply and return pipes.

3.1.7. The existing supply and return pipes shall be cut at the Tee branches near the deck head of the Lower Forward Auxiliary Machinery Compartment over the sewage treatment tank starboard side. The existing supply and return pipes shall be reconnected to the port SS generator pipes with socket weld couplings and elbows. New supply and return pipes shall be installed from the existing pipes aft of the tee branches of the starboard SS generator. The new pipe runs shall follow the existing pipes and run forward and up to the head limiting tank. Each new run is approximately 16 feet. The new pipe runs shall be connected with socket weld fittings. The new supply pipe connection at the tank shall be fitted with a slip-on welded flange for connection to the quick closing valve. The new return pipe connection at the tank shall be threaded.

3.1.8. All new piping shall be 1 inch diameter, seamless black steel, schedule 40, ASTM A-106 Gr B Spec or equivalent.

3.1.9. All pipe fittings and joints shall be 200 bar forged steel, socket weld, ASTM A 105 spec, unless otherwise noted.

3.1.10. All piping materials, workmanship and testing shall be in accordance with the rules and regulations of ABS and Transport Canada.

3.1.11. All new and modified piping shall be pressure tested after completion to 1.5 times the working pressure.

3.1.12. All piping shall be suitably supported by pipe hangers. A sufficient number of union take down joints shall be installed for ready access and/or removal.

3.1.13. All new and modified piping runs shall be flushed and blow-out after installation and tested to insure that they are clean and free of foreign materials and debris prior to start up.

3.2 Location

3.2.1. Generator Flat 6000 A/B Starboard of CL, Frame 121-123

3.2.2. Lower Forward Auxiliary Machinery Compt. Starboard of Sewage Treatment Tank Frame 112-122

3.3 Interferences

3.3.1 Contractor is responsible for the identification of interference items, their temporary removal, storage and refitting to vessel.

Part 4: PROOF OF PERFORMANCE:

4.1 Inspection

4.1.1. All work shall be completed to the satisfaction of the Chief Engineer & ABS.

4.2 Testing

Fuel Oil Head Limiting Tank shall be pressure tested to 2 psi. Blanks shall be fitted to all penetrations. Float valve assembly shall be removed if deemed necessary to prevent damage to the valve.

Piping shall be tested as specified.

4.3 Certification

Piping / Fittings certificates to be supplied to Chief Engineer.

Part 5: DELIVERABLES:

5.1 Drawings/Reports

5.1.1 The Chief Engineer shall receive a typed written report in electronic format for work carried out.

5.2 Spares

N/A

5.3 Training

N/A

5.4 Manuals

N/A

Spec item #: E-02	**SPECIFICATION**	TCMSB Field #: N/A
Safety Valve Re-certification		

Part 1: SCOPE:

1.1 The intent of this specification shall be to have 55 safety valves recertified for ABS. Valves will be removed and reinstalled by ships crew.

1.2 This work shall be carried out in Conjunction with the following:

Part 2: REFERENCES:

2.1 Guidance Drawings/Nameplate Data

2.1.1. List of Valves:

Tag	Serial #	Pressure	Size
# 2 Service Air Comp 1st Stage	NV4787	60 PSI	¼" NPT
# 2 Service Air Comp Discharge	NV0396	150 PSI	1" NPT
# 2 Start Air Comp 2nd Stage	NV2168	33 BAR	¾" BSP
# 2 Start Air Comp 1st Stage	NV2166	6.6 BAR	1 ¼" BSP
Emergency Air Comp 1st Stage	NV2156	60 PSI	¼" NPT
Emergency Air Comp 2nd Stage	NV2160	260 PSI	¼" NPT
Emergency Air Comp 3rd Stage	NV37826	1300 PSI	¼" NPT
Whistle Buffer Tank	NV2151	100 PSI	1" NPT
Main Eng 1&2 Buffer Tk (Clutch)	NV3714	115 PSI	1" NPT
Main Eng 3&4 Buffer Tk (Clutch)	NV2152	115 PSI	1" NPT
Main Eng # 1 Control Air Rec.	NV2155	120 PSI	¾" NPT
Main Eng # 2 Control Air Rec.	NV2154	120 PSI	¾" NPT
Main Eng # 3 Control Air Rec.	UV7809	120 PSI	¾" NPT
Main Eng # 4 Control Air Rec.	UV7808	120 PSI	¾" NPT
Main Air Bottle FWD	NV24348-2	430 PSI	1" NPT
Main Air Bottle AFT	NV24348-1	430 PSI	1" NPT
# 1 Start Air Comp 1st Stage	NV23312	6.6 BAR	1 ¼" BSP
Domestic Hotwater Tank	NV59610	101 PSI	1 ½" NPT
# 1 Start Air Comp 2nd Stage	NV2167	33 BAR	¾" BSP
Winch Control Bottle FWD	NV2171	120 PSI	3/8" NPT
Winch Control Bottle AFT	NV2172	120 PSI	3/8" NPT
M/E Clutch Air Reducing Station	NV2162	105 PSI	¾" NPT
Whistle Reducing Station	NV2150	105 PSI	¾" NPT
M/E Control Air Reducing Station	NV2169	100 PSI	¾" NPT
# 1 Service Air Comp 1st Stage	NV2231	60 PSI	¼" NPT
# 1 Service Air Comp Discharge	NV2235	145 PSI	1" NPT
# 1 Service Air Bottle	NV00397	145 PSI	1" NPT
F/O Quick Closing Valve System	NV4184	110 PSI	¼" NPT

F/O Quick Closing Valve System	NV4185	110 PSI	¼” NPT
Deicing/SW Valve Red. Station	NV02551		
Bunker Pipeline	159306.020-1		
Fuel Oil Cargo Pump Relief	C-24257-A10		
No 1 ME Air Start Valve Relief	NV 5136		
No 2 ME Air Start Valve Relief	NV 3512		
No 3 ME Air Start Valve Relief	NV 5137		
No 4 ME Air Start Valve Relief	NV 5135		
No 1 ME Jacket Water Heater	NV 5130		
No 2 ME Jacket Water Heater	NV 5131		
No 3 ME Jacket Water Heater	NV 5134		
No 4 ME Jacket Water Heater	NV33728		
Hot Water Tank Relief	NV833590		
SS Gen Start Air Reducing Station	NV02824	150 PSI	1” NPT
Domestic FW System Tank	NV 5914		
Spare	NV 5604		
Spare (Vidmars)	NV3712	115 PSI	1” NPT
Spare (Vidmars)	NV3713	115 PSI	1” NPT
Spare (Vidmars)	NV3711	15 PSI	¾” NPT
Spare	NV4786		
Spare	NV0114		
Spare	NV5155		
Spare	NV2163		
Spare	NV2170		
Spare	NV5911		
Spare	NV5912		
Spare	NV5915		
Spare	SB90513		

2.2 Standards

2.2.1. The following Coast Guard Standards and or Technical Bulletins must be adhered to in the course of executing this specification. Copies of these standards and bulletins can be obtained from the CCG Technical Authority.

2.2.2. Canadian Coast Guard Fleet Safety Manual (DFO 5737)

2.2.3. Coast Guard ISM Confined Space Entry 7.D.9

2.2.4. Coast Guard ISM Hotwork procedures

2.2.5. Coast Guard ISM Fall Protection procedures

2.2.6. Canadian Coast Guard Welding Specifications for Ferrous Materials, Revision 4. (TP6151 E)

2.2.7. CWB CSA 47.1 latest revision Division I, II or III

2.2.8. SSPC-SPT

2.2.9. NIST and NRC

2.2.10. (a) TP 127E-TC Marine Safety Electrical Standards.

2.2.11. (b) IEEE Standard 45 - Recommended Practice for Electrical Installation on Shipboard.

2.3 Regulations

2.3.1. Marine Machinery Regulations - CSA

2.4 Owner Furnished Equipment

2.4.1. The contractor shall supply all materials, equipment, and parts required to perform the specified work unless otherwise stated.

Part 3: TECHNICAL DESCRIPTION:

3.1 General

3.1.1. The above valves shall be transported to an authorized valve testing facility for service, testing, and recalibration. The valve shall be in sent in two deliveries to allow the service air to remain in service during the work. The first delivery will be all valves with the exception of 3 valves, which shall be sent in the second delivery.

3.1.2. The valves shall be returned to the vessel for installation by the ships crew.

3.1.3. An allowance of $10,000.00 shall be quoted for the sub-contractor work and adjusted by 1379 procedure following receipt of invoice.

3.2 Location

3.2.1. Various areas of the vessel.

3.3 Interferences

3.3.1 Contractor is responsible for the identification of interference items, their temporary removal, storage and refitting to vessel.

Part 4: PROOF OF PERFORMANCE:

4.1 Inspection

4.1.1. All work shall be completed to the satisfaction of the Chief Engineer & ABS.

4.2 Testing

As specified by NIST

4.3 Certification

As specified by NIST

Part 5: DELIVERABLES:

5.1 Drawings/Reports

5.1.1 Original certificates for the recertification shall be given to the Chief Engineer.

5.2 Spares

N/A

5.3 Training

N/A

5.4 Manuals

N/A

Spec item #: E-03	**SPECIFICATION**	TCMSB Field #: N/A
Stbd RO Suction Pipe Replacement		

Part 1: SCOPE:

1.1 The intent of this specification shall be to replace the 3" Ø suction pipe from the fire pump suction to the existing flange connection aft of watertight door frame 98-99, lower engine room. Also replace a Tee branch to the direct sea suction.

1.2 This work shall be carried out in Conjunction with the following:

Part 2: REFERENCES:

2.1 Guidance Drawings/Nameplate Data

2.1.1.

2.2 Standards

2.2.1. The following Coast Guard Standards and or Technical Bulletins must be adhered to in the course of executing this specification. Copies of these standards and bulletins can be obtained from the CCG Technical Authority.
2.2.2. Canadian Coast Guard Fleet Safety Manual (DFO 5737)
2.2.3. Coast Guard ISM Confined Space Entry 7.D.9
2.2.4. Coast Guard ISM Hotwork procedures
2.2.5. Coast Guard ISM Fall Protection procedures
2.2.6. Canadian Coast Guard Welding Specifications for Ferrous Materials, Revision 4. (TP6151 E)
2.2.7. CWB CSA 47.1 latest revision Division I, II or III
2.2.8. SSPC-SPT

2.3 Regulations

2.3.1. Canada shipping Act.

2.4 Owner Furnished Equipment

2.4.1. The contractor shall supply all materials, equipment, and parts required to perform the specified work unless otherwise stated.

Part 3: TECHNICAL DESCRIPTION:

3.1 General

3.1.1. The contractor shall remove the section of piping from the Fire Pump main suction at the eccentric reducer, the direct suction branch at WT bulkhead 99, and the bolted flange leading to the RO pump suction. See below sketch for reference.

3.1.2. The four sections shall be fabricated with schedule 80 steel pipe, hot dipped galvanized. The pipe ends shall be grooved for Victaulic groove lock coupling style 75. One end of the short section shall have a bolted flange fitted. The sealing surface of the grooved ends shall have the galvanized dressed smooth to allow the Victaulic seals to seat tight.

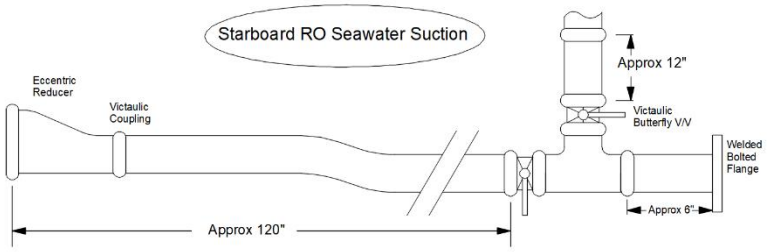

3.1.3. The Victaulic Tee shall be replaced with new and hot dipped galvanized. The Victaulic Valves shall be replaced with new if deemed necessary. The contractor shall have an allowance of $2000.00 for fittings, seals, and valves. This shall be adjusted by 1379 following proof of invoice.

3.1.4. The pipe sections shall be reassembled as originally found. The pipe brackets shall be reused and secured.

3.2 Location

3.2.1. Frame 98-99 Lower Engine Room Port of Centerline

3.3 Interferences

3.3.1 Contractor is responsible for the identification of interference items, their temporary removal, storage and refitting to vessel.

Part 4: PROOF OF PERFORMANCE:

4.1 Inspection

4.1.1. All work shall be completed to the satisfaction of the Chief Engineer.

4.2 Testing

The pipe assembly shall be tested to ensure there are no leaks.

4.3 Certification

Pipe certificates shall be supplied to the Chief Engineer.

Part 5: DELIVERABLES:

5.1 Drawings/Reports

5.1.1 The Chief Engineer shall receive a typed written report in electronic format for work carried out.

5.2 Spares

N/A

5.3 Training

N/A

5.4 Manuals

N/A

Spec item #: E-04	**SPECIFICATION**	TCMSB Field #: N/A
Main Engine Lube Oil Coolers Inspection		

Part 1: SCOPE:

1.1 The intent of this specification shall be to open up the four main engine lube oil coolers for cleaning, inspection, and testing and obtain a five year credit for the survey by ABS.

1.2 This work shall be carried out in Conjunction with the following:

Part 2: REFERENCES:

2.1 Guidance Drawings/Nameplate Data

2.1.1. Manufacturer: NRF Thermal Engineering BV Holland
Cooler Type: H2P 2900 x 10 -2-CAS
Serials #s: 82-0291-1, 2, 3, 4
Drawing #: 4DF21-2
Dry Weight: 1251 kg
Length With End Boxes – 3.529 meters
Diameter – 570 mm
Test Pressure Tube Side: 9 bar
Test Pressure Shell Side: 12 bar

2.1.2. Machinery Arrangement # 60-00-01 Rev 5

2.1.3. NRF Lube Oil Cooler Drwg. # 4DF21-2

2.2 Standards

2.2.1. The following Coast Guard Standards and or Technical Bulletins must be adhered to in the course of executing this specification. Copies of these standards and bulletins can be obtained from the CCG Technical Authority.

2.2.2. Canadian Coast Guard Fleet Safety Manual (DFO 5737)

2.2.3. Coast Guard ISM Confined Space Entry 7.D.9

2.2.4. Coast Guard ISM Hotwork procedures

2.2.5. Coast Guard ISM Fall Protection procedures

2.2.6. Canadian Coast Guard Welding Specifications for Ferrous Materials, Revision 4. (TP6151 E)

2.2.7. CWB CSA 47.1 latest revision Division I, II or III

2.2.8. SSPC-SPT

2.3 Regulations

2.3.1. CSA Marine Machinery Regulations

2.4 Owner Furnished Equipment

2.4.1. The contractor shall supply all materials, equipment, and parts required to perform the specified work unless otherwise stated.

Part 3: TECHNICAL DESCRIPTION:

3.1 General

3.1.1. The valves shall be isolated from the coolers. The water and oil shall be drained from the coolers and contained for disposal. All parts shall be marked for alignment purposes during reassembly.

3.1.2. The cooler tube nests shall remain in the shell for cleaning.

3.1.3. The 5 inch Ø oil and water pipes from the coolers to the isolation valves shall be removed and marked for alignment purposes during reassembly. Blanks are to be fitted to the system piping immediately upon part removal to prevent ingress of debris.

3.1.4. The end covers of the coolers shall be removed and identified for correct reassembly. The o'ring gland rings shall also be removed. The oil side inlet and outlet ports shall be left open for inspection purposes only, then closed up to prevent the ingress of dirt..

3.1.5. The coolers are mounted vertically and fastened with horizontal pedestals.

3.1.6. The cooler tubes shall be thoroughly cleaned internally with a soft brush and flushed with water to remove loose debris. Cleaner shall be ZEP Formula 9862. Wire brushes and high pressure steam is **not** permitted for cleaning. All sealing surfaces shall be cleaned to accept new gaskets and O-Rings.

3.1.7. The internals of the coolers shall be inspected through the oil ports and tube ends by ABS attending surveyor.

3.1.8. The coolers shall be reassembled using owner supplied gaskets and O-Rings.

3.1.9. The coolers shall be air tested at specified test pressure on both the shell side and tube side. Pressure must be maintained for a minimum of one hour. The contractor shall provide all fittings, blanks, and test equipment to perform the tests. The pressure gauge shall have a current calibration certificate and a copy of the certificate shall be given to the Chief Engineer. The test shall be witnessed by ABS and the Chief Engineer.

3.1.10. All removed piping shall have their sealing surfaces cleaned and new contractor supplied gaskets installed. The oil pipes are bolted flange connections and the water is Victaulic groove-lok. Allow for thirty 5 inch Victaulic gaskets to be replaced. Gaskets are style 75/77 and must be compatible with DEWT cooling water treatment.

3.1.11. Following the successful completion of the test the coolers shall be completely reassembled as originally found. The contractor is to take precautions to ensure cleanliness for the reassembly of the oil system. The Chief Engineer will be responsible for charging and flushing the oil side of the coolers prior to checking for leaks. The water and oil shall be circulated through the coolers to check for leaks.

3.2 Location

3.2.1. Frame 90-94 Engine Room Flat

3.3 Interferences

3.3.1 Contractor is responsible for the identification of interference items, their temporary removal, storage and refitting to vessel.

Part 4: PROOF OF PERFORMANCE:

4.1 Inspection

All work shall be completed to the satisfaction of the Chief Engineer & ABS.

4.3 Testing

As specified in the technical description.

4.3 Certification

Part 5: DELIVERABLES:

5.1 Drawings/Reports

5.1.1 The Chief Engineer shall receive a typed written report in electronic format for work carried out.

5.2 Spares

N/A

5.3 Training

N/A

5.4 Manuals

N/A

Spec item #: E-05	**SPECIFICATION**	TCMSB Field #: N/A
PTO Clutch Survey		

Part 1: SCOPE:

1.1 The intent of this specification shall be to open up the Port and Starboard Power Take-Off (PTO) clutches for the 5 year survey by ABS under the supervision of an authorized representative for the clutch. Contact is Kevin Sanford, Service Manager at Bosch Rexroth in Dartmouth, Nova Scotia or Scott Whelan at Northpoint Technical Services, St. John's NL

Part 2: REFERENCES:

2.1 Guidance Drawings/Nameplate Data

2.1.1. Manufacturer: Lohmann & Stolterfoht (Pneumaflex)
Type: KAA 180

2.2 Standards

2.2.1. The following Coast Guard Standards and or Technical Bulletins must be adhered to in the course of executing this specification. Copies of these standards and bulletins can be obtained from the CCG Technical Authority.
2.2.2. Canadian Coast Guard Fleet Safety Manual (DFO 5737)
2.2.3. Coast Guard ISM Confined Space Entry 7.D.9
2.2.4. Coast Guard ISM Hotwork procedures
2.2.5. Coast Guard ISM Fall Protection procedures
2.2.6. Canadian Coast Guard Welding Specifications for Ferrous Materials, Revision 4. (TP6151 E)
2.2.7. CWB CSA 47.1 latest revision Division I, II or III
2.2.8. SSPC-SPT

2.3 Regulations

i.CSA - Marine Machinery regulations

2.4 Owner Furnished Equipment

The contractor shall supply all materials, equipment, and parts required to perform the specified work unless otherwise stated.

Part 3: TECHNICAL DESCRIPTION:

3.1 General

3.1.1. The Contractor is to allow $10,000 for the services, travel and living costs for the FSR. Allowance is to be adjusted up or down by 1379 action.

3.1.2. Both clutches shall be dealt with in the same manner. All replacement parts and seals are to be Coast Guard supply.

3.1.3. **Pre Removal:** The contractor shall remove the clutch guard surrounding the clutches as well as any necessary piping, wiring, etc to facilitate the removal of the clutch assembly.

3.1.4. The contractor shall measure and record the clutch drum travel in the ahead and astern positions as per the manufacturers' specifications.

3.1.5. Copies of the above readings shall be given to the Chief Engineer prior to continuing removal of the clutch.

3.1.6. The contractor shall ensure that all faces of the associated flanges and spacer plates are properly "proof" marked for subsequent re-assembly and correct orientation.

3.1.7. **Removal and Disassembly:** Remove the clutch to a location between the port and starboard gearboxes for disassembly. During disassembly of the clutch pack, the contractor shall ensure that all elements of the pack are proof marked for correct orientation during re-assembly.

3.1.8. Disassemble the clutch to clean and lay out the parts for inspection by the attending ABS Surveyor and Chief Engineer as follows. Separate the tapered jackets, separate the friction cones and spiroflex elements, disassemble the clutch cylinder and piston, and remove and discard the piston seals and the sealing cord.

3.1.9. The contractor shall remove the seal adapter located in the gearbox input shaft and inspect the spring and seals. The o'rings shall be replaced with new o'rings. The face seal shall also be replaced with a new seal.

3.1.10. **Cleaning and Inspection:** Thoroughly clean both tapered jackets and inspect them closely for heat cracks and discolouration. Lightly buff both sets of friction pads to remove any dirt, grease, oil, etc. and inspect them closely for wear and defects. Clean and inspect all fasteners for wear and defects.

3.1.11. Clean and inspect the four spiroflex elements for wear and defects. Clean and inspect the cylinder and piston, especially in way of the seal surfaces, for wear and defects.

3.1.12. The attending ABS Surveyor and Chief Engineer shall inspect the clutch components before re-assembly.

3.1.13. The contractor shall be responsible for arranging the attendance of the ABS Surveyor.

3.1.14. The contractor shall measure and record the torsional deformation "angle of twist" on the spiroflex elements as per the manufacturer's instructions.

3.1.15. **Re-assembly:** The contractor shall be aware that the torque on the long bolts with tapered necks is very low due to the grade of steel. These bolts hold the flexible elements together. The torque varies with the size of the bolts. The proper torque is specified in the instruction manual.

3.1.16. Reassemble the piston and cylinder in good order using new seals and cord with the seals cemented in place with adhesive (owner supply) in accordance with the manufacturer's instructions. Reassemble the friction cones and spiroflex elements in good order. Reassemble the tapered jackets.

3.1.17. All fasteners shall be torqued as per the manufacturer's specifications. All proof marks shall be checked. Reassemble any additional removals.

3.1.18. The owners shall supply the seal kit for the clutches and the contractor shall supply all other material for the specified work.

3.1.19. Pre-Installation Testing: Before the clutch assembly is installed the contractor shall pressurize it to 100 psi to demonstrate that all components are tight and that all seals are operating correctly. This test shall be carried out in the presence of the Chief Engineer. The duration of the test will be for one hour to the satisfaction of the Chief Engineer.

3.1.20. Re-Installation and Testing: The contractor shall install the clutch ensuring correct orientation of associated flanges and spacer rings using the proof marks. All proof mark locations shall be verified. All fasteners shall be properly torqued.

3.1.21. The contractor shall advise the Chief Engineer when the clutch is ready to be tested. The ship's crew will manually operate the clutch to check for correct operation and air leaks after installation with the contractor's personnel in attendance.

3.1.22. The contractor shall record the clutch travel readings and alignment and present them to the Chief Engineer at this time.

3.1.23. The contractor shall replace all guards, disturbed piping, wiring, and other removals in good order on completion of the above work.

3.2 Location

3.2.1. Lower engine room

3.3 Interferences

3.2.1. Contractor is responsible for the identification of interference items, their temporary removal, storage and refitting to vessel.

Part 4: PROOF OF PERFORMANCE:

4.1 Inspection

All work shall be completed to the satisfaction of the Chief Engineer.

4.2 Testing

As per specified work

4.3 Certification

N/A

Part 5: DELIVERABLES:

5.1 Drawings/Reports

5.1.1 The Contractor shall provide the Chief Engineer with a complete written report of the work completed by the FSR. All initial and final readings are to be included.

5.2 Spares

N/A

5.3 Training

N/A

5.4 Manuals

N/A

Spec item #: E-06	**SPECIFICATION**	TCMSB Field #: N/A
Humidifier Drain Pipe Replacement		

Part 1: SCOPE:

1.1 The intent of this specification shall be to replace approximately 12 feet of drain pipe from the fan room to the Y connection port side of Winch Room near the deck head. Fabricate a rectangular funnel shaped drain pan.

1.2 This work shall be carried out in Conjunction with the following:

Part 2: REFERENCES:

2.1 Guidance Drawings/Nameplate Data

2.1.1.

2.2 Standards

2.2.1. The following Coast Guard Standards and or Technical Bulletins must be adhered to in the course of executing this specification. Copies of these standards and bulletins can be obtained from the CCG Technical Authority.
2.2.2. Canadian Coast Guard Fleet Safety Manual (DFO 5737)
2.2.3. Coast Guard ISM Confined Space Entry 7.D.9
2.2.4. Coast Guard ISM Hotwork procedures
2.2.5. Coast Guard ISM Fall Protection procedures
2.2.6. Canadian Coast Guard Welding Specifications for Ferrous Materials, Revision 4. (TP6151 E)
2.2.7. CWB CSA 47.1 latest revision Division I, II or III
2.2.8. SSPC-SPT

2.3 Regulations

2.3.1. TC Construction Regulations For Deck Penetrations

2.4 Owner Furnished Equipment

2.4.1. The contractor shall supply all materials, equipment, and parts required to perform the specified work unless otherwise stated.

Part 3: TECHNICAL DESCRIPTION:

3.1 General

3.1.1. Remove section of piping that extends just starboard of the centerline to the port side of winch room at a "Y" connection for other drains. The pipe section is located above the tow wire tensioner and penetrates the deck head into the Fan Room located on the Focsle Deck (Blue Deck).

3.1.2. Cropped deck penetration pipe into the Fan Room and install new pipe with Victaulic grooved ends. Deck penetration shall be welded on each side of the deck. The pipe that extends in the fan room shall be as low as possible to fit a Victaulic coupling and the drain pan, the drain pan height is limited to allow drains from the humidifiers.

3.1.3. Install new section of pipes from the penetration in the fan room across the winch room and reconnect to the Y connection. The piping is in two sections, one approximately 10 feet and another approximately 2 feet in length. All pipe connections are Victaulic grooved.

3.1.4. A Stainless Steel drain pan shall be fabricated. Pan shall be 16 inches by 8 inches, 4 inch vertical sides with the bottom sloped to a 2 inch diameter drain. The plate thickness for the drain pan shall be 1/16 inches. The location of the drain in the bottom of the pan shall be determined on site for correct fitment. The end of the drain pipe shall be grooved for Victaulic seal and coupling. The drain pan shall be supported to the deck with two sections of vertical SS flat bar welded to the deck.

3.1.5. All piping shall be 2 inch diameter galvanized steel with Victaulic grooved ends. All connections shall be fitted with new Victaulic couplings and seals. Contractor shall have an allowance of $1000.00 for Victaulic couplings and seals. This shall be adjusted up or down upon proof of invoice.

3.1.6. Existing pipe brackets shall be reused.

3.1.7. Scaffolding and Fall Arrest Procedures shall be followed for this work.

3.2 Location

3.2.1. Winch Room Above Tow Wire Tensioner

3.2.2. Fan Room on Focsle Deck

3.3 Interferences

3.3.1 Contractor is responsible for the identification of interference items, their temporary removal, storage and refitting to vessel.

Part 4: PROOF OF PERFORMANCE:

4.1 Inspection

4.1.1. All work shall be completed to the satisfaction of the Chief Engineer.

4.2 Testing

N/A

4.3 Certification

N/A

Part 5: DELIVERABLES:

5.1 Drawings/Reports

5.1.1 The Chief Engineer shall receive a typed written report in electronic format for work carried out.

5.2 Spares

N/A

5.3 Training

N/A

5.4 Manuals

N/A

Spec item #: E-07	**SPECIFICATION**	TCMSB Field #: N/A
Incinerator Extended Spindle Access Box Replacement		

Part 1: SCOPE:

1.1 The intent of this specification shall be to replace the flush deck access box for the incinerator remote fuel shutoff.

1.2 This work shall be carried out in Conjunction with the following:

Part 2: REFERENCES:

2.1 Guidance Drawings/Nameplate Data

2.1.1.

2.2 Standards

2.2.1. The following Coast Guard Standards and or Technical Bulletins must be adhered to in the course of executing this specification. Copies of these standards and bulletins can be obtained from the CCG Technical Authority.
2.2.2. Canadian Coast Guard Fleet Safety Manual (DFO 5737)
2.2.3. Coast Guard ISM Confined Space Entry 7.D.9
2.2.4. Coast Guard ISM Hotwork procedures
2.2.5. Coast Guard ISM Fall Protection procedures
2.2.6. Canadian Coast Guard Welding Specifications for Ferrous Materials, Revision 4. (TP6151 E)
2.2.7. CWB CSA 47.1 latest revision Division I, II or III
2.2.8. SSPC-SPT

2.3 Regulations

2.3.1. Canada shipping Act.

2.4 Owner Furnished Equipment

2.4.1. The contractor shall supply all materials, equipment, and parts required to perform the specified work unless otherwise stated.

Part 3: TECHNICAL DESCRIPTION:

3.1 General

3.1.1. Port fuel oil day tank shall be opened up, cleaned, and certified gas free. Ship's crew will drain the contents of the tank to suction level. Remaining fuel and liquid/debris from cleaning shall be disposed of.

3.1.2. Insulation at the deck head of the incinerator compartment IWO existing valve shutoff access box shall be removed. The turning adapter at the end of the extended spindle in the deck access box shall be disconnected. The extended spindle shall be pulled clear of the access box. Securing points for the extended spindle will have to be released.

3.1.3. The existing access box shall be cropped from the deck. The new access box is 5 inch diameter. The hole in the deck shall be dressed to allow welding in the new access box.

3.1.4. The new access box is combined unit to cover the extended spindle and an operating mechanism for turning the extended spindle. The new access box will be CCG supplied.

3.1.5. The following are guidelines for welding in the new access box. Coast Guard crew will assist dismantling and assembling the assembly.

1. Remove cover
2. Remove socket cap screws
3. Slide weld sleeve off of housing. There are several o'ring seals that may make this a little difficult.
4. Tack weld the Weld Sleeve into the deck opening, alternating from one area to another so as to reduce the amount of heat put on the Weld Sleeve, keeping warping to a minimum.
5. Fully weld the Weld Sleeve
6. Allow the Weld Sleeve to cool
7. Same weld procedures for both sides of deck.
8. Reassemble the Deck Box parts into the Weld Sleeve taking care not to damage the o'ring seals.

3.1.6. A sleeve adapter shall be fabricated to fit on the end of the extended spindle and the operating shaft of the new deck box. This shall be drilled and pinned with stainless steel pin 1/4" diameter.

3.1.7. The extended spindle shall be secured as originally found.

3.1.8. All damaged coating IWO new deck box shall be powered tooled clean and coated with two coats of International Interprime 234 alkyd marine primer.

3.1.9. The insulation IWO the new deck box shall refitted with new insulation and sealed with insulation tape.

3.1.10. Port Day Tank shall be boxed up with new neoprene gasket ¼" thick with the center removed.

3.2 Location

3.2.1. Focsle Deck Port Frame 99-100
3.2.2. Incinerator Compartment Deck Head

3.3 Interferences

3.3.1 Contractor is responsible for the identification of interference items, their temporary removal, storage and refitting to vessel.

Part 4: PROOF OF PERFORMANCE:

4.1 Inspection

4.1.1. All work shall be completed to the satisfaction of the Chief Engineer & ABS.

4.2 Testing

4.2.1. The extended spindle operating assembly shall be tested to prove operation.
4.2.2. The deck welds shall be MPI tested.

4.3 Certification

N/A

Part 5: DELIVERABLES:

5.1 Drawings/Reports

5.1.1 The Chief Engineer shall receive a typed written report in electronic format for work carried out.

5.2 Spares

N/A

5.3 Training

N/A

5.4 Manuals

N/A

Spec item #: E-08	**SPECIFICATION**	TCMSB Field #: N/A
Emergency Fire Pump Suction & Discharge Valves.		

Part 1: SCOPE:

1.1 The intent of this specification shall be to overhaul the suction/discharge valves and extended spindle arrangements for both valves.

1.2 This work shall be carried out in Conjunction with the following:

1. Seabay and Seabox Maintenance

Part 2: REFERENCES:

2.1 Guidance Drawings/Nameplate Data

2.1.1. Suction Valve: 5 Inch Butterfly w/Geared Actuator and 90 degree Extended Spindle
2.1.2. Discharge Valve: 5 Inch Angle Globe Valve with Extended Spindle consisting of one 90 degree knuckle, one 90 degree universal joints and four standard universal joints.

2.2 Standards

2.2.1. The following Coast Guard Standards and or Technical Bulletins must be adhered to in the course of executing this specification. Copies of these standards and bulletins can be obtained from the CCG Technical Authority.
2.2.2. Canadian Coast Guard Fleet Safety Manual (DFO 5737)
2.2.3. Coast Guard ISM Confined Space Entry 7.D.9
2.2.4. Coast Guard ISM Hotwork procedures
2.2.5. Coast Guard ISM Fall Protection procedures
2.2.6. Canadian Coast Guard Welding Specifications for Ferrous Materials, Revision 4. (TP6151 E)
2.2.7. CWB CSA 47.1 latest revision Division I, II or III
2.2.8. SSPC-SPT
2.2.9. (a) TP 127E-TC Marine Safety Electrical Standards.

2.2.10. (b) IEEE Standard 45 - Recommended Practice for Electrical Installation on Shipboard.

2.3 Regulations

2.3.1. TC and ABS Fire Regulations

2.4 Owner Furnished Equipment

2.4.1. The contractor shall supply all materials, equipment, and parts required to perform the specified work unless otherwise stated.

Part 3: TECHNICAL DESCRIPTION:

3.1 General

Suction Valve:

3.1.1. Remove extended spindle from the deck plate level to the valve. The extended spindle runs vertically down approximately 4 feet to a 90 degree knuckle and then to the port approximately 3 feet to the geared actuator of the valve. The spindle is supported in bushings and coupled with sleeves and pins. The 90 degree knuckle shall be disassembled, remove the old grease and clean the internals. Check the play in the knuckle. The bushings IWO spindles shall be checked for wear. The coupling sleeves shall be disassembled and checked for play. The spindle arrangement shall be reassembled and the knuckle shall be repacked with new grease. Replacement of parts resulting from inspection shall be covered by 1379.

3.1.2. The 5 inch butterfly valve with geared actuator shall be removed from the bulkhead at frame 99. The geared actuator shall be removed from the valve and disassembled to check for wear of the gears and bushings. Check for play between valve spindle and geared actuator. Check the seat and disc of the butterfly for damage and prove the operation of the valve is free. The valve and actuator shall be reassembled and the geared actuator shall be repacked with new grease. The valve shall be reinstalled as originally found.

Discharge Valve

3.1.3. Remove the extended spindle arrangement for inspection and cleaning. The spindle arrangement consists of a flush deck actuator on the main deck in the winch room, extends into the engine room at a universal joint just below the main deck, down 6 feet to a 90 degree geared knuckle, outboard to a universal joint and further outboard 4 feet to a 90 degree universal joint, down to the deck of the engine room flat at another universal joint, through the deck of the engine room flat to another universal joint and then to the valve wheel of the discharge valve. All connections of the extended spindle arrangement are sleeved and pinned. The 90 degree knuckle shall be opened up, cleaned of grease to check gears and bushing for play. The knuckle shall be reassembled and packed with new grease. The remaining universal joints shall be checked for play. The flush deck actuator shall be checked for free movement with the extended spindle disconnected. The deck penetration bushes shall be proven clean and free for spindle movement. Replacement of parts resulting from the inspection shall be covered by 1379.

3.1.4. Remove the 5 inch angle globe valve and completely disassemble, clean and inspect. The discharge pipe to the fire main shall be fitted with a temporary blank while the valve is removed. The valve body shall be thoroughly cleaned of rust and debris. Remove old packing and clean bonnet. Seat and disc shall be lapped to provide a tight seal. All sealing surfaces shall be cleaned to bare metal. The valve shall be reassembled, with new packing and bonnet gasket. Spindle shall be greased prior to reassembly. New 5 inch Victaulic flange gaskets shall be replaced with new.

3.2 Location

3.2.1. Main Deck Winch Room, Port Side, Outside Incinerator Room.
3.2.2. Engine Flat Port 6000 A/B, Aft Of Bulkhead Frame 99
3.2.3. Lower Engine Room Port, Emergency Fire Pump, Aft Of Bulkhead Frame 99

3.3 Interferences

3.3.1 Contractor is responsible for the identification of interference items, their temporary removal, storage and refitting to vessel.

Part 4: PROOF OF PERFORMANCE:

4.1 Inspection

4.1.1. All work shall be completed to the satisfaction of the Chief Engineer. ABS & Chief Engineer or designate shall witness inspections.

4.2 Testing

Test operation of extended spindles following the complete reassembly of the spindle and valve systems. Test for leaks during the refloat of the vessel.

4.3 Certification

N/A

Part 5: DELIVERABLES:

5.1 Drawings/Reports

5.1.1 The Chief Engineer shall receive a typed written report in electronic format for work carried out.

5.2 Spares

N/A

5.3 Training

N/A

5.4 Manuals

N/A

Spec item #: E-09	**SPECIFICATION**	TCMSB Field #: N/A
Fuel Oil Purifier Replacement		

Part 1: SCOPE:

1.1 The intent of this specification shall be to replace the two existing fuel oil purifiers with new Alfa Laval purifiers. This specification is in conjunction with Poseidon Marine Consultants Technical Specification 19-096-003.

1.2 This work shall be carried out in Conjunction with the following:

Part 2: REFERENCES:

2.1 Guidance Drawings/Nameplate Data

2.1.1. PMC Technical Specification Purifier Replacement 19-096-003
2.1.2. 51489463#0 Alfa Laval Flow Chart-Single Flex P636 MDO
2.1.3. 51489464#0 Alfa Laval Dimensional Drawing-Single Flex P636 MDO
2.1.4. 51489465#0 alfa Laval Installation Drawing-Single Flex P636 MDO
2.1.5. 51489466 Rev 1.0 Alfa Laval Electrical Diagrams
2.1.6. 71-04-01 Fuel Oil Diagram (CAD Version)
2.1.7. Alfa Laval local Representative
Madsen Diesel & Turbine
141 Glencoe Drive
Mount Pearl (St. John's), NL A1N 4S7
T: (709) 726-6774
C: (709) 769-7275

2.2 Standards

2.2.1. The following Coast Guard Standards and or Technical Bulletins must be adhered to in the course of executing this specification. Copies of these standards and bulletins can be obtained from the CCG Technical Authority.
2.2.2. Canadian Coast Guard Fleet Safety Manual (DFO 5737)
2.2.3. Coast Guard ISM Confined Space Entry 7.D.9
2.2.4. Coast Guard ISM Hotwork procedures
2.2.5. Coast Guard ISM Fall Protection procedures
2.2.6. Canadian Coast Guard Welding Specifications for Ferrous Materials, Revision 4. (TP6151 E)
2.2.7. CWB CSA 47.1 latest revision Division I, II or III
2.2.8. SSPC-SPT

2.3 Regulations

2.3.1. Electrical standards TP 127 – Ship Safety electrical Standards
2.3.2. IEEE Standard 45- Recommended practices for Electrical Installation on Shipboard
2.3.3. Canada Shipping Act 2001 Hull Insp.
2.3.4. Marine Safety Regulatory Authority
2.3.5. ABS Machinery Regulations

2.4 Owner Furnished Equipment

2.4.1. The contractor shall supply all materials, equipment, and parts required to perform the specified work unless otherwise stated.

Part 3: TECHNICAL DESCRIPTION:

3.1 General

3.1.1. The purifiers are located above the fuel oil sludge tank port side between frames 107 and 111 and # 1 FO DB Port between frames 105 and 123.
3.1.2. The double bottom fuel tank for # 1 port shall be opened up, cleaned and gas freed. Tank contents will be pumped down to suction level by the ship's crew. Tank shall be pressure washed at 2500 psi and ragged cleaned. All debris and liquids from cleaning shall be disposed of ashore. Tank shall be certified gas free for Hotwork for the duration of the specified work. Tank volume is 71.34M3. Two manhole covers shall be removed and replaced with new Buna-N rubber gaskets ¼ inch thick.
3.1.3. The contractor shall have an allowance of $10,000.00 for the services of Alfa Laval FSR to commission the new purifier units following the installation. This shall be adjusted up or down upon proof of invoice by 1379.
3.1.4. The new Fuel Oil Purifiers are currently stored at Coast Guard Technical Stores. The contractor shall advise 48 hours in advance for delivery of the new purifiers prior to installing the units.
3.1.5. The new Purifiers are skid mounted complete with control panel, feed pump and control valves. The skid units shall be disassembled to the point of allowing transport to the Forward Lower Auxiliary Machinery Space. The units shall be reassembled as originally found. There are two access routes available, Mud Room Tween Deck or Winch Room Main deck.
3.1.6. The existing power feed cables to each Purifier shall be reused. The cables shall not be cut. The existing alarm wiring for the A&M system shall also be reused. The two disconnect breakers at MCC # 5 Section 1R and MCC # 1 Section 2F in the MCR shall be replaced with new CCG supplied breakers.

3.1.7. A separate CCG supplied emergency stop switch shall be installed for each Purifier Unit. Switches shall be connected by 4C #14 marine cables from switches to control panels. The location shall be on the forward side of watertight bulkhead at frame 99 in the Lower Auxiliary Machinery Space. The switches shall be labelled with lacmoid tags with ¾" lettering size.

3.1.8. The existing units recirculate the fuel to the suction side of the feed pump during recirculation/discharge mode. The new units shall be piped to the 2 inch Ø settling tank discharge pipe. Two separate pipes shall be installed from the new units and branched into the settling tank discharge pipe at "Y" connections. The branches shall be spaced 1 meter apart. The location of the branches shall be in an area between the seawater pumps and bulkhead at frame 99 under the deck plates. New check valves shall be installed in the new recirculating branch pipes; valves shall be horizontal swing check with socket weld flanges.

3.1.9. The existing 4 inch Ø sludge connections at the sludge tank top shall be reused. The 4 inch Ø pipe at these connections shall be modified to suit the sludge and drains from the purifiers.

3.1.10. The Fuel Oil Sludge Tank vent pipe shall be increased in diameter from 2 ½" to 4". This shall be fitted to the first flange of the horizontal run of vent pipe. The remainder of the vent pipe shall remain as-is. The existing vent pipe shall be removed from the flange at the horizontal run above the sludge tank and the adapter flange at the tank top. This pipe is approximately 12 feet in length, fitted with two elbows and a offset below the floor plates for alignment between the purifier skids. The adapter spool at the tank top shall be removed. The tank top penetration shall be increased to 4" diameter. A new tank top adapter spool shall be fabricated and installed over the penetration. The adapter shall be welded both sides of tank top. A new 4" diameter pipe arrangement shall be fabricated and fitted between the tank top adapter flange and the existing 2 ½" vent pipe. The new pipe shall be fitted with a bolted flange on the tank top end and a concentric reducer 2 ½"x4" with 2 ½" bolted flange on the other end. Flange connections shall be fitted with new gaskets, nuts, bolts and washers. Piping shall be black seamless steel pipe ASTM 53 Grade B Schedule 40. Elbows shall be butt weld carbon steel A234 WPB or equivalent. Flanges shall be slip-on weld 150#. Refer to reference drawings for tank top penetration details.

3.2 Location

3.2.1. Lower Auxiliary Machinery Space Frames 107-111

3.2.2. MCR at MCC # 5 and 1.

3.3 Interferences

3.3.1 Contractor is responsible for the identification of interference items, their temporary removal, storage and refitting to vessel.

Part 4: PROOF OF PERFORMANCE:

4.1 Inspection

4.1.1. All work shall be completed to the satisfaction of the Chief Engineer.

4.2 Testing

As part of FSR Commissioning

4.3 Certification

N/A

Part 5: DELIVERABLES:

5.1 Drawings/Reports

5.1.1 The Chief Engineer shall receive a typed written report in electronic format for work carried out.

5.2 Spares

N/A

5.3 Training

N/A

5.4 Manuals

N/A

[Title]

CCGS Terry Fox

88m Heavy Icebreaker

[Subject]

Fuel Purifier Unit Replacement

19-096-003
REV.0

06 November 2019

[Keywords]

[Comments]
[Status]

[Category]

Prepared For:

CCG Supervisor / Engineering - St. John's
P.O. Box 5667
St. John's, NL
Canada A1C 5X1

Prepared By:

Poseidon Marine Consultants Ltd.
391 Stavanger Drive

TABLE OF CONTENTS

1.0 PURPOSE

This document is intended to provide a baseline scope of work pertaining to removal of the two existing fuel purifier units and replacement with two new Alfa Laval Single Flex P363 MDO no heater purifier units.

2.0 REFERENCE DRAWINGS AND DOCUMENTS

Alfa Laval Product Sheets	Flex Separation System, P Separators 626/636
Alfa Laval Drawing 51489466	P636 Electrical Installation
Alfa Laval Drawing 51489465	P636 Installation Drawing
Alfa Laval Drawing 51489464	P636 Dimensional Drawing
Alfa Laval Drawing 51489463	P636 Flow Chart
Burrard Yarrows Corp. Drawing 71-04-01	Fuel Oil Diagram
PMC Drawing 19-096-101	Fuel Purifier Seat Arrangement

3.0 DEFINITIONS AND ABBREVIATIONS

Contractor	To Be Determined	Refit/Repairer
CCG	Canadian Coast Guard	Vessel Owner
PMC	Poseidon Marine Consultants Ltd.	Naval Architect/Technical Consultant
ABS	American Bureau of Shipping	RO on Behalf of Transport Canada

4.0 GENERAL REQUIREMENTS

4.1 Acceptance of the Work

All work shall be completed to the satisfaction of the Chief Engineer and ABS.

The Contractor shall provide appropriate steel certificates and welding procedures, in accordance with the criteria listed below. The Contractor shall establish critical milestones at which the work may be inspected.

4.2 Materials and Welding

Unless otherwise specified, all new steel shall be provided with mill certification to 44W or equivalent. New pipe to be ASTM A53 or equivalent suitable for fuel systems. Any deviation or

substitution is to be proposed by the Contractor to CCG for approval prior to use.

All welding shall be completed per CWB approved procedures, using weld consumables with a minimum tensile strength at least equivalent to E-7018 electrodes.

4.3 Execution of the Work

In general, the Contractor shall progress repairs in a manner that:

- regards prevailing and forecasted weather conditions, such that CCG property and equipment is suitably sheltered where applicable.
- does not compromise the structural integrity of the vessel.
- enables periodic inspections of ongoing and completed work by the Chief Engineer or designate .

In preparation for work, the Contractor shall:

- provide all ancillary services necessary to complete the subject repair. These may include, but are not limited to strip out and temporary removal of interference items as required to complete the work
- drain all fuel and sludge from the existing fuel purifier units, piping, and sludge tank below. Area is to be certified for hot work prior to commencement of work.

During the completion of hot work, the Contractor shall:

- supply fire watch while hot work is ongoing, with appropriate class portable fire extinguisher and charged fire hose ready for use.
- subject work inspection to be coordinated with the Chief Engineer or designate.

Following the completion of hot work in specific areas of the vessel, the Contractor shall:

- subject all new welded pipe connections to 100% visual and MPI and the system pressure tested at 100PSI to the satisfaction of the Chief Engineer or designate.
- subject mounting frame welded connections to 100% visual inspection to the satisfaction of the Chief Engineer or designate.
- clean affected spaces and remove debris from vessel.
- clean and apply primer to new welded seams and other disturbed areas. Apply coatings per vessel paint scheme or as directed by the Chief Engineer.
- replace all disturbed items and items temporarily removed to complete the work.

5.0 SCOPE OF RENEWALS

Contractor is to complete the following:

1. Sources of fuel to be isolated to prevent leakage. Disconnect all inlet, outlet, drain, air, and water piping from the two existing fuel purifier units. Area is to be cleaned and open pipe ends capped prior to completing any hot work to prevent contamination.

2. Disconnect all electrical, control wiring, and control panels for existing purifiers.

3. Disconnect and temporarily remove / protect all interference items including piping, drains, sensors, monitors, etc. as required.

4. Remove both existing fuel purifier units including integrated skid / save-all, support structure, and control modules. Equipment to be disposed of as directed by the Chief Engineer.

5. Fabricate and install 2 new purifier mounting seats per PMC drawing 19-096-101. Seats to be constructed using 4”x4”x5/16” OA. Leg length to be such that the bottom of the purifier skids are 166mm below the checker plate. Height of checker plate approximately 0.8m above tank top. New frames to be oriented with the long edge pointing forward/aft. Final position of new seats to be determined on site, taking into account existing opening in the checker plate, below tank top structure, and manufacturer recommended service area clearances. Modification to checker plate may be required in way of new installation. Bolt pattern to be per manufacturer specifications. See Alfa Laval drawing no. 51489464.

6. Install 2 new Owner supplied Alfa Laval P363 purifier units on the newly installed mounting seats using manufacturer specified bolts and torque. Each unit has 8 holding points.

7. Modify existing ship piping to suit location of connections on new purifier units. Connections at purifiers to be flanged per manufacturers specification. All other joins to be welded. Layout and orientation of pipes to be determined on site after confirmation of location of connection points. Piping to be cleaned before and after welding to ensure no residues or welding debris remain. Connect inlet piping, outlet piping, purifier drains to sludge tank, skid drains to sludge tank, water inlet, and air supply from existing ship systems.

8. All electrical connections to be connected per manufacturer’s directions.

9. System commissioning to be completed per manufacturer’s specification.

Note:

See ***Appendices A & B & C*** *for photographs and details*.

APPENDIX A
Photographs

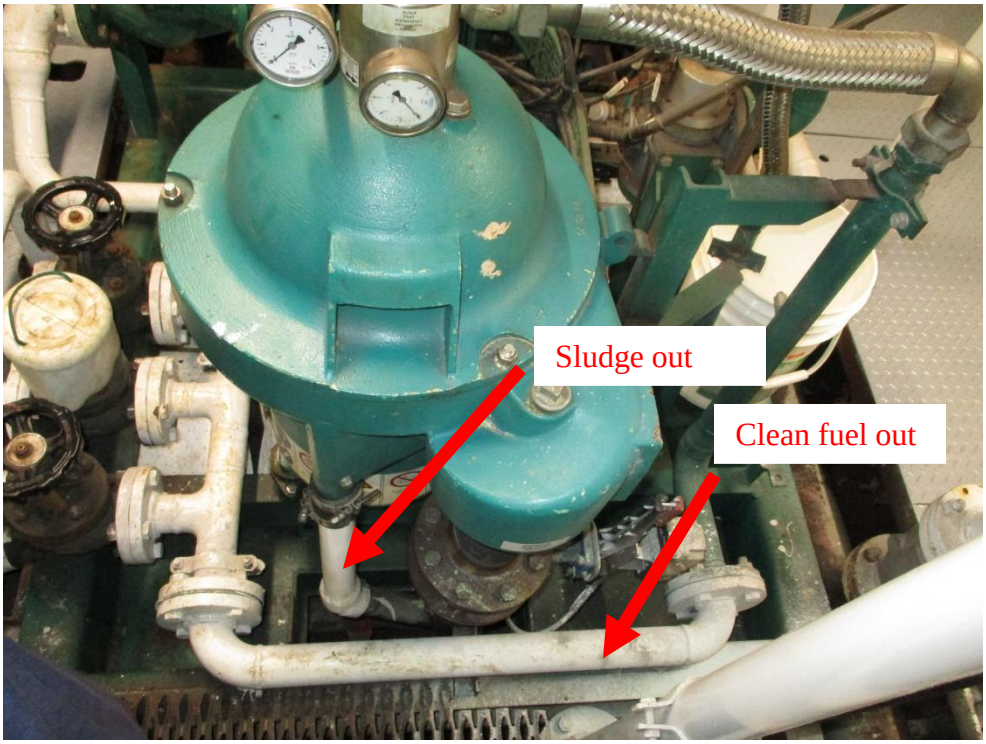

Photograph 1 - Existing purifier output side

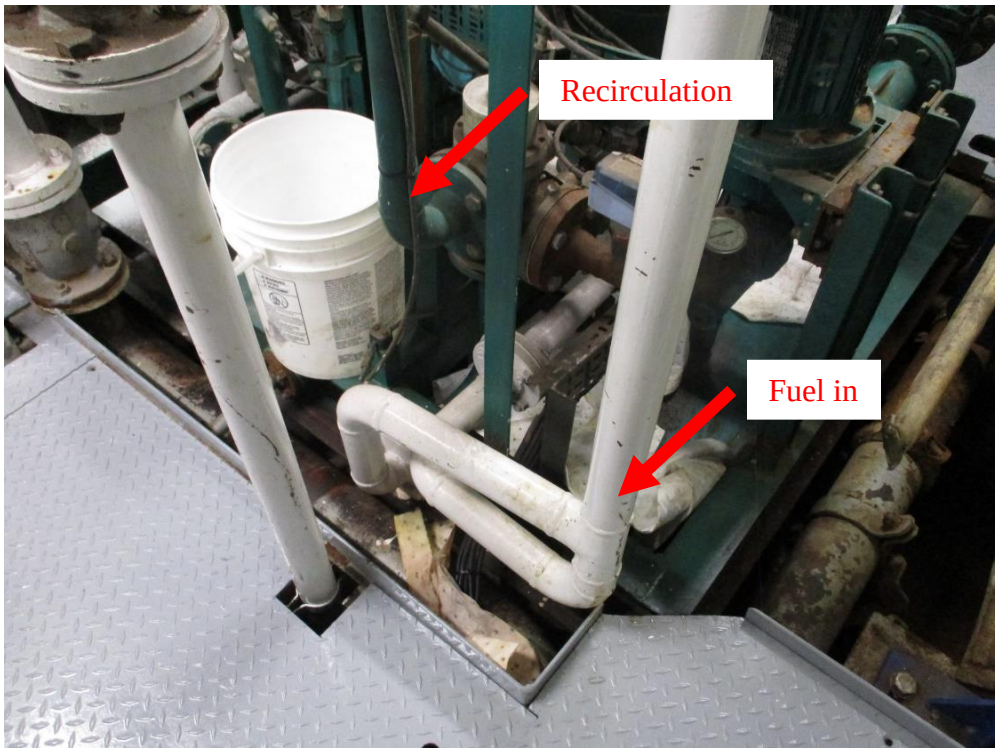

Photograph 2 - Existing purifier supply side

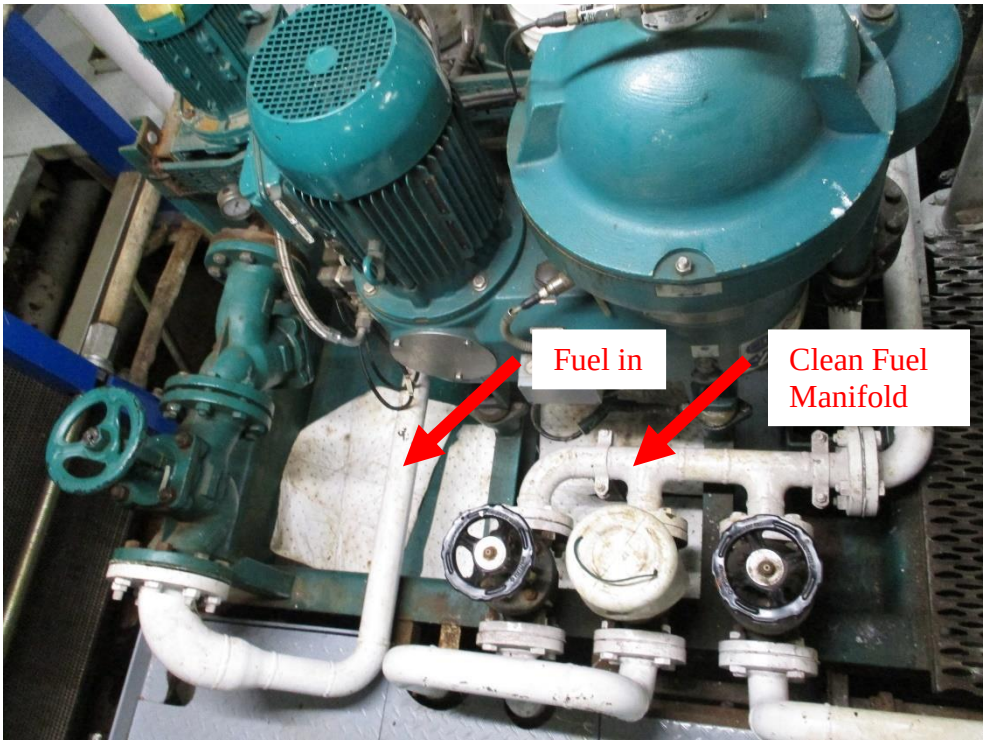

Photograph 3 - Existing purifier output manifold

APPENDIX B

New Purifier Mounting Seat Arrangement

NOTES:

1. THIS DRAWING DETAILS CONSTRUCTION OF THE MOUNTING SEAT FOR 2 NEW ALFA LAVAL P636 PURIFIER UNITS.
2. AS-FITTED MATERIALS AND WELDING TO BE COMPLETED TO THE SATISFACTION OF THE CHIEF ENGINEER OR DESIGNATE.
3. ALL DIMENSIONS IN MILIMETERS UNLESS NOTED OTHERWISE. ALL DIMENSIONS TO BE CHECKED AGAINST VESSEL PRIOR TO COMMENCEMENT OF WORK. NEW STRUCTURAL MEMBERS ARE SPECIFIED IN IMPERIAL MEASURES TO REFLECT LOCAL SUPPLY.
4. UNLESS OTHERWISE APPROVED, ALL NEW STEEL TO BE MILL CERTIFIED GRADE 44W IN ACCORDANCE WITH CAN/CSA G40.21.
5. NEW STEEL TO BE BLASTED AND PRIMED.
6. ALL HOT WORK TO BE EXECUTED IN ACCORDANCE WITH CSA W59 AND CSA W47.1., USING E-480XX (OR APPROVED EQUIVALENT) ELECTRODES.
7. ALL WELDING TO BE DOUBLE CONTINUOUS, ¼" LEG LENGTH, UNLESS NOTED OTHERWISE.
8. NDT SHALL BE AS FOLLOWS:

   -ALL STRUCTURAL WELDS 100% VISUAL EXAMINATION.
9. ALL NEW STEEL TO BE COATED IAW OWNER'S PAINT SCHEME. AFFECTED AREAS OF EXISTING STEEL TO BE RESTORED TO ORIGINAL CONDITION.
10. TWO SEPARATE IDENTICAL FRAMES TO BE FABRICATED.

REFERENCE DOCUMENTS:

1. "PMC DOCUMENT 19-096-003 REV 0 – CCGS TERRY FOX FUEL PURIFIER REPLACEMENT

ABBREVIATIONS:

OA – ORDINARY ANGLE
NTS – NOT TO SCALE
TYP – TYPICAL DETAIL OR DIMENSION
PLT – PLATE

REV	DATE	DESCRIPTION	BY	CHK	APP	CLT
0	01 NOV 19	ISSUED FOR CCGS REVIEW	AJM	DRM	–	–

Poseidon marine consultants limited

391 SIGNAL HILL DRIVE
ST. JOHN'S, NL, CANADA
A1A 0A1

PH: (709) 739-4321
FAX: (709) 739-4427
www.poseidonmarineconsultants.ca

CLIENT: CANADIAN COAST GUARD

VESSEL: CCGS TERRY FOX

TITLE: MOUNTING SEAT FOR ALFA LAVAL P636 PURIFIER

DWN:	PROJECT NO: 19-096	DWG. NO: 19-096-101	
CHKD:	SCALE/SIZE: N.T.S. / 11x17	SHEET: 1 OF 2	DATE: 30 OCT 2019

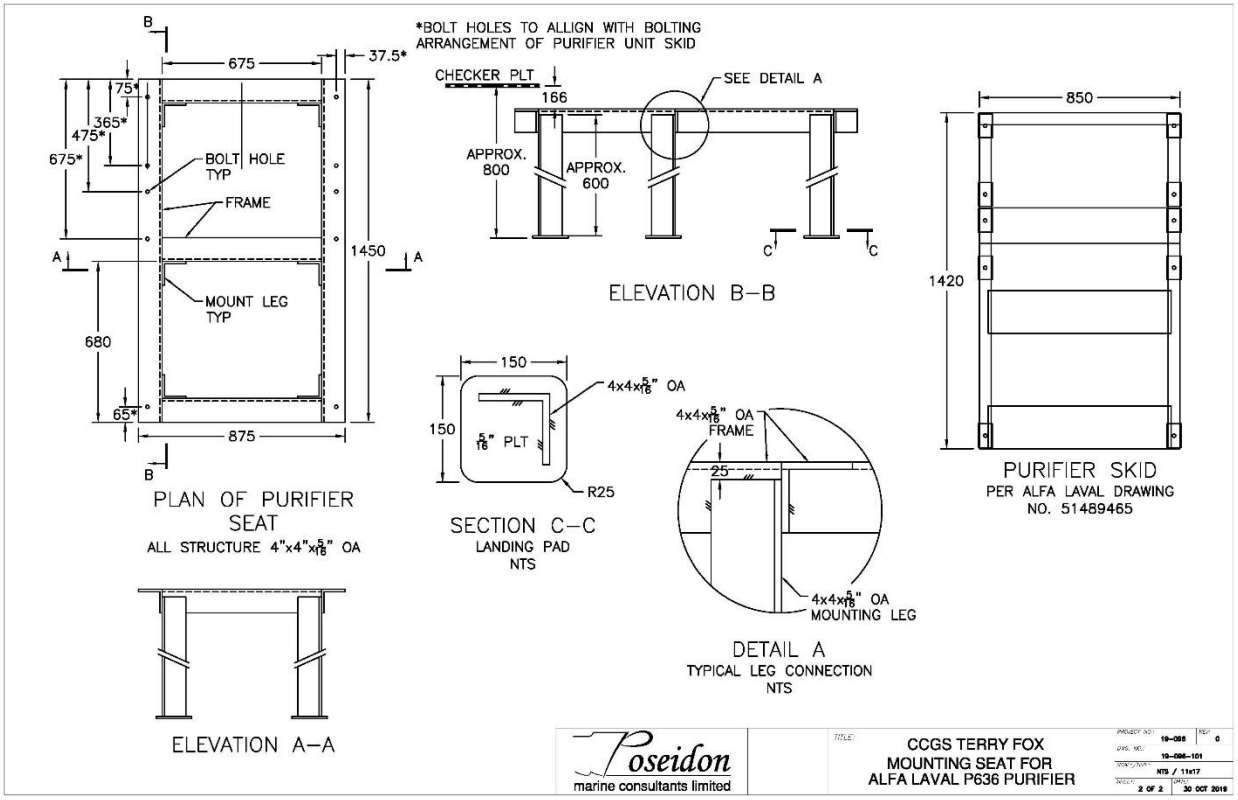

APPENDIX C
Alfa Laval Product Documentation

Flex separation systems, P separators 626/636

Cleaning systems for lubricating and lighter fuel oils*

Flex system components for P separators 626/636.

** P separators 626/636 can also be used to clean heavier oils with well-defined densities.*

S and P Flex separation systems

Alfa Laval's S and P Flex separation systems combine the high efficiency, low sludge output and low operating cost of Alfa Laval centrifugal separators with a flexible scope of supply. Extensive possibilities for the separation system layout and assembly make it possible to suit any engine room and any oil separation application.

In addition, S and P Flex separation systems feature the EPC 60 controller, which enables the intuitive navigation of menus, parameters and alarms. The EPC 60 controller also has a modular construction for easy I/O board addition and replacement.

The S and P Flex separation concept includes the complete S- and P separator range. These can be combined in mixed ship sets, even within a single customer-specified module.

Application P separators

P separators are based on purifier technology, which means that the oil/water interphase is manually adjusted by means of a gravity disc. Because the separators do not automatically adjust to varying oil density, they are most suitable for economical cleaning of the following:

- Lubricating oils
- Distillates
- Lighter diesel oils

If the oil is well defined and does not vary in density, P separators can also be manually adjusted to clean heavy fuel oils with densities up to 991 kg/m^3 and viscosities up to 700 cSt/50ºC.

P separators are designed for automatic operation at sea and in automated power stations ashore.

Scope of supply

The S and P Flex separation concept provides a wide range of alternatives for P separators. Depending on the need, a P separator can be supplied as a separator and ancillaries, as a customer-specified module, or as part of a comprehensive package including services and order-specific documentation. These P separators come equipped with energy-efficient IE3 motors.

Flex system

A P separator with ancillaries in the form of optimized block components provides full say over the use of space. This allows for local modularization or do-it-yourself assembly.

Flex modules

A compact P separator module can be built to a customer-specified configuration from a wide range of modular skids and machine blocks. Multi-modules are possible, as well as mixed modules including one or more S-separators and/or P separators for the simultaneous treatment of different types of mineral oils. All Flex modules are factory tested to ensure faster start-up and commissioning.

Module examples

Single Flex module
with separator (excluding heater and pump)

Single Flex module
with separator, heater and pump

Quadruple Flex module
with separators, heaters and pumps

Features and benefits

- *Small footprint, high flexibility*
  The small separator and the modular nature of the surrounding components allow easy installation and flexible positioning in the engine room.
- *No water tank*
  No tank is needed to supply operating water, which further simplifies installation.
- *High separation efficiency*
  An optimized design ensures the best possible separation efficiency from the bowl and disc stack.
- *CentriShoot*
  The CentriShoot discharge system greatly reduces sludge volumes. Its fixed discharge slide flexes gently to expose the discharge ports, thereby eliminating metal-to-metal wear.
- *CentriLock*
  The CentriLock bowl-locking system uses a lightweight, non-threaded snap ring. This prevents wear by allowing easy removal without a sledgehammer.
- *Long service intervals*
  Wear-preventing features like CentriShoot and CentriLock reduce the consumption of spare parts and allow planned maintenance to be performed less often. This reduces operating costs.
- *Easy operation and service*
  The PLC based EPC 60 controller is designed for "one-button" starts and stops, as well as intuitive menu navigation. Information about parameters and alarms can be easily accessed, which simplifies both operation and troubleshooting. The EPC 60 also has a modular construction that enables faster troubleshooting and I/O board replacement.
- *Remote control and monitoring*
  Using Ethernet or Bus communication, Flex systems and modules based on P separators 626/636 can be operated and supervised remotely from the control room. A variety of alarm functions are available as standard, and extra I/O boards can be added to the EPC 60 controller in order to enhance its operating and monitoring capabilities.

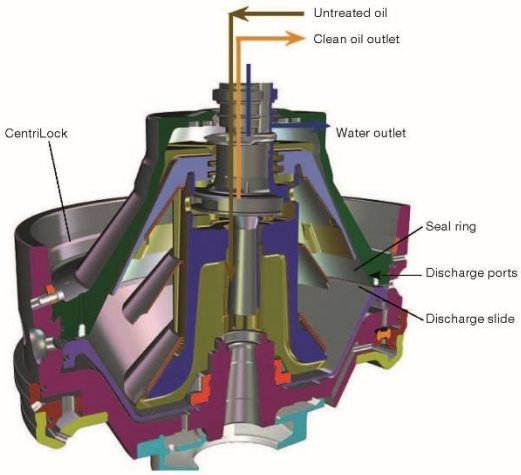

Optional equipment

Flex separation systems based on P separators 626/636 can be complemented with the following equipment:

- Starter (included in module versions)
- HEATPAC heaters
- Space heating
- Additional thermometers
- Vibration sensor kit
- ALP feed pump
- Flow regulating system
- Sludge removal kit
- Sludge outlet butterfly valve kit
- Steam shut-off valve kit
- Air pressure reducer valve
- Pipe arrangement for multiple modules, including heater cross-connection
- Emergency safety shutdown
- Remote monitoring and control
- Separator lifting tool

ALP feed pump

HEATPAC CBM heater

HEATPAC EHM heater

Schematic diagram

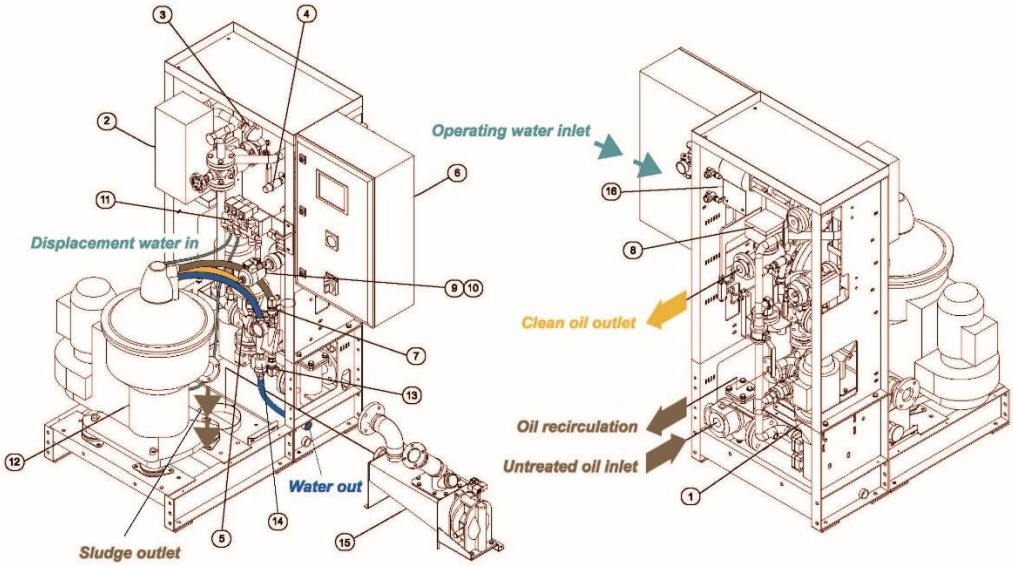

1 Feed pump
2 Heater
3 Temperature transmitter
4 Safety valve
5 Change-over valve
6 Process controller
7 Pressure transmitter – oil
8 Complete regulating valve
9 Regulating valve – oil
10 Pneumatic shut-off valve
11 Valve block water
12 Separator
13 Pressure transmitter – water
14 Drain valve
15 Sludge removal kit
16 Regulating valve

System layout

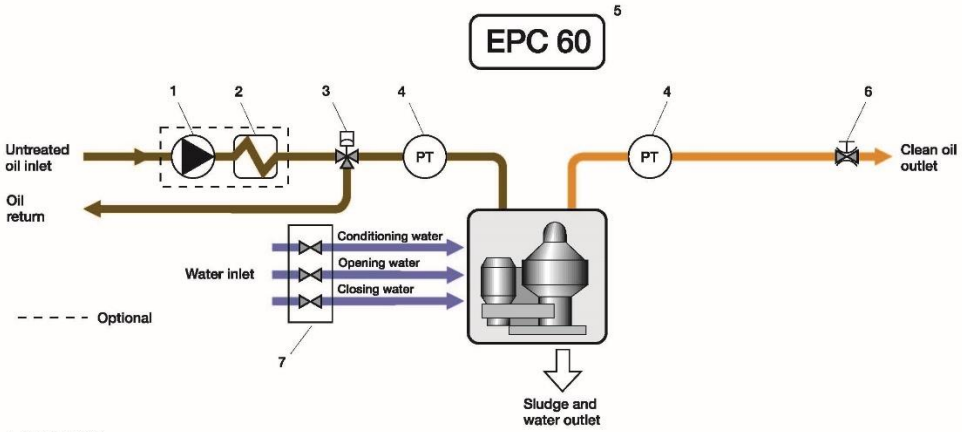

1. Feed pump
2. Heater
3. Pneumatically controlled change-over valve
4. Pressure transmitter
5. Control unit
6. Regulating valve
7. Solenoid valve block, water

Operating principle

A Flex separation system based on a P separator 626/636 is operated automatically by the EPC 60 controller. Untreated oil, heated to the correct temperature, is fed continuously to the separator, which is driven by an electric motor via a friction clutch and belt.

The separator bowl is fixed at the top of a spindle, which is supported by bearings and special composite springs. This bowl can be arranged as a purifier or as a clarifier. Both configurations remove sludge, which accumulates at the bowl periphery and is intermittently discharged by the high-precision CentriShoot discharge system.

In a purifier configuration, both sludge and water are separated from the oil, which means that water is continuously discharged from the bowl. The EPC 60 controller automatically controls the admission of water for the water seal and the displacement of oil prior to sludge discharge, but a gravity disc is needed to establish the correct interphase position in the separator bowl, i.e. the boundary between the oil and the water seal. The size of the gravity disc must be matched to the oil's density, viscosity/temperature and feed rate to the separator.

In a clarifier configuration, a clarifier disc is fitted instead of a gravity disc. The water outlet is blocked, which means that the separator's water-handling capacity is limited and that water accumulates like sludge.

During normal operation, vital process parameters are monitored. These parameters, as well as alarms, are indicated by easy-to-understand text messages on the LCD display of the EPC 60 controller.

The EPC 60 controller provides many alarm functions, including alarms for low oil pressure, high sludge tank level (if the optional sludge removal kit is included) and power failure. Additional functions are available for a vibration alarm when the optional vibration sensor is fitted.

Low-wear mechanical platform

S separators 921–987 and P separators 626/636 are built on a low-wear mechanical platform that features CentriShoot and CentriLock. The CentriShoot discharge system, which greatly reduces sludge volumes, has a fixed discharge slide that flexes gently to expose the discharge ports, thereby eliminating metal-to-metal wear. The CentriLock bowl-locking system uses a lightweight, non-threaded snap ring that prevents wear by allowing easy removal without a sledgehammer.

CentriShoot
Instead of a sliding bowl bottom, the CentriShoot discharge system features a fixed discharge slide that flexes at its edge. This increases discharge accuracy and does away with metal-to-metal wear.

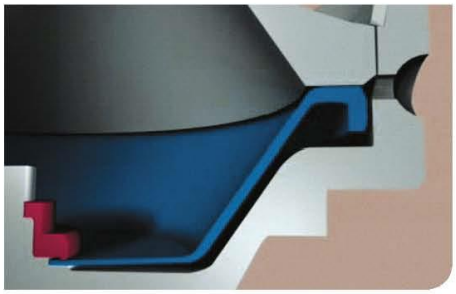

Step one:
The CentriShoot discharge slide is fixed at the centre. During separation, the slide covers the discharge ports.

Step two:
During sludge discharge, the edge of the slide flexes downward, exposing the discharge ports.

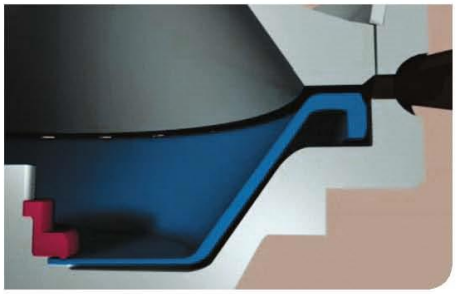

Step three:
After discharge, the slide moves gently back into position to close the ports. This is done hydraulically, without any springs.

CentriLock
Conventional lock rings are threaded and must be removed with a sledgehammer. Over time, the metal-to-metal wear between bowl and lock ring can lead to expensive bowl repair or replacement.

An Allen key is the only tool needed to work with CentriLock.
No sledgehammer is necessary.

The CentriLock snap ring lifts out and snaps in easily – without any threads to wear.

Instead of a conventional lock ring, the CentriLock bowl-locking system features a non-threaded snap ring. This lightweight ring snaps quickly into place and is easily removed with only an Allen key.

Operations

Preventive maintenance procedures are handled quickly and simply with the help of a compression tool. The snap ring of the patented CentriLock bowl-locking system is non-threaded and requires only an Allen key to remove.

- Maintenance intervals:
  - Inspection Service every 4 000 h or 6 months
  - Overhaul Service every 12 000 h or 18 months
- Service spares kits contain all necessary spare parts for each service and tips for maintenance in checkpoints:
  - Inspection Kit with O-rings and seals for separator bowl
  - Overhaul Kit with parts for drive system, belt, bearings and pads, also containing an Inspection Kit
  - Support Kit with strategic spares for operation and maintenance backup
- The System Manual includes detailed information in electronic or printed form:
  - Installation instructions
  - Operating instructions
  - Alarms and troubleshooting
  - Service and spare parts
- Commissioning and technical services are available from all Alfa Laval offices, including start-up assistance and advice on operation and maintenance.
- Training in all aspects of oil treatment, freshwater generation and heat transfer is available.
- All services can be incorporated into specially tailored Nonstop Performance packages. Details are available from local Alfa Laval offices.

Max. recommended capacity, l/h on lubricating oils for trunk piston engines

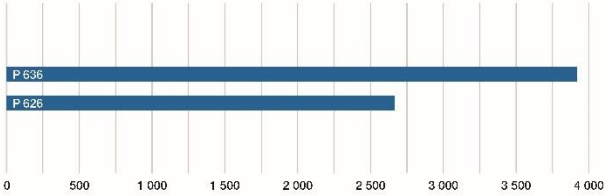

Technical data

Main supply voltage	3-phase, 220 V up to 690 V
Control voltage	1-phase, 100/110/115/230 V
Frequency	50 or 60 Hz
Control air	Min 5 bar, max 8 bar
Operating water pressure	Min 2 bar, max 8 bar

Flex system	Size (height x width x length)*	Net weight (kg)
P 626	895 x 750 x 1075	424
P 636	975 x 750 x 1195	496

* Dimensions and weights for Flex systems do not include control cabinet.

Flex module	Size (height x width x length)**	Net weight (kg)
P 626	1750 x 750 x 1075	540
P 636	1750 x 850 x 1195	638

** Dimensions and weights for Flex modules do not include pump and heater.

Conformity
The mark of conformity confirms that the equipment complies with European Economics Area (EEA) directives.

EMD00232EN 1509

How to contact Alfa Laval
Up-to-date Alfa Laval contact details for all countries are always available on our website at www.alfalaval.com

Spec item #: E-10	**SPECIFICATION**	TCMSB Field #: N/A
Engine Room Supply Fan Overhaul		

Part 1: SCOPE:

1. The intent of this specification shall be to remove engine room supply fans (four in number) units complete, for overhaul, cleaning and inspection. Upon completion, all units shall be reinstalled in original positions and tested.

1.1 This work shall be carried out in Conjunction with the following:

Part 2: REFERENCES:

2.1 Guidance Drawings/Nameplate Data

2.1.1. Hull No 1-07 62-00--02 SHT 1 FR 1 Machinery Space Ventilation Engine Room
2.1.2. Hull No 1-07 62-00--02 SHT 1 FR 2 Machinery Space Ventilation Engine Room
2.1.3. Hull No 1-07 62-00--02 SHT 1 FR 3 Machinery Space Ventilation Engine Room
2.1.4. Norris Warming Manual
2.1.5. Fans are:
Canadian Buffalo
HB Vanaxial Fans, direct Drive
32500 CFM
36” Blade Diameter
2.1.6. Motors are:
Etatech
30 HP
440V, 3 Phase, 60 Hz.
1200/1800 RPM
Frame Size: 364T
2.1.7. Following four units shall be dealt with:
i. Port Outboard Supply
ii. Port Inboard Supply
iii. Starboard Inboard Supply
iv. Starboard Outboard Supply
2.1.8.

2.2 Standards

2.2.1. The following Coast Guard Standards and or Technical Bulletins must be adhered to in the course of executing this specification. Copies of these standards and bulletins can be obtained from the CCG Technical Authority.
2.2.2. Canadian Coast Guard Fleet Safety Manual (DFO 5737)
2.2.3. Coast Guard ISM Confined Space Entry 7.D.9
2.2.4. Coast Guard ISM Hotwork procedures
2.2.5. Coast Guard ISM Fall Protection procedures
2.2.6. Canadian Coast Guard Welding Specifications for Ferrous Materials, Revision 4. (TP6151 E)
2.2.7. CWB CSA 47.1 latest revision Division I, II or III
2.2.8. SSPC-SPT
2.2.9. (a) TP 127E-TC Marine Safety Electrical Standards.

2.2.10. (b) IEEE Standard 45 - Recommended Practice for Electrical Installation on Shipboard.

2.3 Regulations

2.3.1. TP 127E Ship Electrical Standards – Marine Safety

2.4 Owner Furnished Equipment

2.4.1. The contractor shall supply all materials, equipment, and parts required to perform the specified work unless otherwise stated.

Part 3: TECHNICAL DESCRIPTION:

3.1 General

3.1.1. Fans are located in port and starboard upper engine room casings at “B” deck level. Access is difficult, area of work is restricted. Access to the supply fans is by manhole cover behind the wheel house port and stbd.
3.1.2. Crane shall be required to remove and install fans motors from the space.
3.1.3. The decking IWO manhole is coated with International Intershield 300 followed by Intershield 6GV Heavy Duty Non Skid. Contractor shall be required to cut free the manhole combing and to later weld combing back into place upon completion of the work to allow for fan motor removal and installation (motors are larger than the manhole opening). Hot Work Permits shall be required. Damaged deck coating shall be repaired with above noted coating system. Damaged coating inside the plenum shall be coated with two coats of alkyd primer and one coat of International Interlac 665. Intact coating shall be feathered back with power tools.
3.1.4. Temporary plywood covers shall be required to be fitted over the holes in the deck to keep out rain and inclement weather. Area shall be barricaded to prevent personnel from falling into the hole.

3.1.5. Each unit shall be electrically isolated, locked out and disconnected.

3.1.6. Fan motors and blades shall be removed from casings and transported to contractors shop facility. Any shims fitted at fan mounting arrangement shall be carefully removed, retained and identified as to relative position.

3.1.7. Air ducting openings at louvers shall be blanked with plywood, when fans are removed.

3.1.8. Contractor shall be responsible for removal of any interference items or removals required to allow access, removal and disassembly of fan units. Any interference item so disturbed or removal shall be returned to original situation.

3.1.9. Each motor shall be meggered before removal and after reinstallation. All results to be recorded.

3.1.10. Motors shall be completely disassembled.

3.1.11. Rotors and stators shall be steam or solvent cleaned and baked. Winding insulation shall be inspected and tested. Windings shall be reinsulated with good quality insulating varnish or equivalent, to normal marine electrical standards. Winding lead wires and terminal blocks shall be inspected.

3.1.12. Exterior of motor shall be shot blasted clean.

3.1.13. End bell bearing bores shall be measured and bearing fit determined.

3.1.14. Contractor shall quote, separately, unit cost to bore and bush end bell to re-establish correct bearing fit.

3.1.15. All bearings shall be replaced with new SKF sealed bearings. Contractor shall bid an allowance of $1500.00 for supply of new bearings and to be adjusted by 1379 following proof of invoice.

3.1.16. Motors shall be reassembled and painted with two (2) coats of epoxy paint.

3.1.17. Motors shall be bench tested and amperage recorded.

3.1.18. Fan blades shall be shot blasted clean.

3.1.19. Fan shall be reinstalled on motor and assembly dynamically balanced using Vibration analysis. Balancing reports shall be given to Chief Engineer.

3.1.20. Fans motors shall be returned to the ship, installed in casings with all new hardware and original shims if fitted. Contractor shall insure fans motors and blades are returned to their original locations. Units shall be re-connected electrically and all removals returned to original condition. Note: Contractor shall take care when installing the fan and motor units to make sure they are centrally oriented in the duct work and that the fan blades are not touching the housings.

3.1.21. Fan units shall be test run for 30 minutes on each low speed and high speed. Current draw shall be recorded at each speed after 20 minutes running.

3.1.22. Three (3) type written copies of the service report detailing all inspection points, readings recorded, repairs made and parts replaced shall be compiled and made available to Chief Engineer.

3.1.23. All work shall be completed to satisfaction of Chief Engineer.

3.2 Location

3.2.1. “C” Deck aft of wheelhouse bridge wings.

3.2.2. Engine Room Supply air plenum below “C” Deck

3.3 Interferences

3.3.1 Contractor is responsible for the identification of interference items, their temporary removal, storage and refitting to vessel.

Part 4: PROOF OF PERFORMANCE:

4.1 Inspection

4.1.3. All work shall be completed to the satisfaction of the Chief Engineer.

4.2 Testing

Proper operation shall be tested after Installation.

4.3 Certification

N/A

Part 5: DELIVERABLES:

5.1 Drawings/Reports

5.1.1 Contractor shall provide a final service report of all readings, measurements, and service work completed.

5.2 Spares

N/A

5.3 Training

N/A

5.4 Manuals

N/A

Spec item #: E-11	**SPECIFICATION**	TCMSB Field #: N/A
Engine Room Exhaust Fan Overhaul		

Part 1: SCOPE:

1. The intent of this specification shall be to remove engine room exhaust fans (four in number) units complete, for overhaul, cleaning and inspection. Upon completion, all units shall be reinstalled in original positions and tested.

1.1 This work shall be carried out in Conjunction with the following:

Part 2: REFERENCES:

2.1 Guidance Drawings/Nameplate Data

2.1.1. Hull No 1-07 62-00--02 SHT 1 FR 1 Machinery Space Ventilation Engine Room
2.1.2. Hull No 1-07 62-00--02 SHT 1 FR 2 Machinery Space Ventilation Engine Room
2.1.3. Hull No 1-07 62-00--02 SHT 1 FR 3 Machinery Space Ventilation Engine Room
2.1.4. Norris Warming Manual
2.1.5. Fans are:
Canadian Buffalo
HB Vanaxial Fans, direct Drive
32500 CFM
36” Blade Diameter
2.1.6. Motors are:
Etatech
30 HP
440V, 3 Phase, 60 Hz.
1200/1800 RPM
Frame Size: 364T
2.1.7. Following two units shall be dealt with:
i. Port Exhaust Fan
ii. Starboard Exhaust Fan

2.2 Standards

2.2.1. The following Coast Guard Standards and or Technical Bulletins must be adhered to in the course of executing this specification. Copies of these standards and bulletins can be obtained from the CCG Technical Authority.
2.2.2. Canadian Coast Guard Fleet Safety Manual (DFO 5737)

2.2.3. Coast Guard ISM Confined Space Entry 7.D.9
2.2.4. Coast Guard ISM Hotwork procedures
2.2.5. Coast Guard ISM Fall Protection procedures
2.2.6. Canadian Coast Guard Welding Specifications for Ferrous Materials, Revision 4. (TP6151 E)
2.2.7. CWB CSA 47.1 latest revision Division I, II or III
2.2.8. SSPC-SPT
2.2.9. (a) TP 127E-TC Marine Safety Electrical Standards.

2.2.10. (b) IEEE Standard 45 - Recommended Practice for Electrical Installation on Shipboard.

2.3 Regulations

2.3.1. TP 127E Ship Electrical Standards – Marine Safety

2.4 Owner Furnished Equipment

2.4.1. The contractor shall supply all materials, equipment, and parts required to perform the specified work unless otherwise stated.

Part 3: TECHNICAL DESCRIPTION:

3.1 General

3.1.1. Fans are located in port and starboard upper engine room casings at "B" deck level. Access is difficult, area of work is restricted. Access to the exhaust fans is by manhole cover behind the wheel house port and stbd. and by the engine room uptakes port & stbd.
3.1.2. Staging, rigging and chain falls will be required to remove and later install the fan motors.
3.1.3. Each unit shall be electrically isolated, locked out and disconnected.
3.1.4. Fan, casings, damper, plenums and fan space shall be thoroughly cleaned and degreased. All dirt, oil and rust shall be removed from fan casing internal areas, old gaskets shall be removed and flanges cleaned. Casings shall be visually inspected for cracks, wastage or any other defect Air trunk flanges shall have all old gasket material removed and cleaned. New gaskets shall be supplied and installed at all flanged joints. Any mounting shims shall be cleaned and re-used in original locations.
3.1.5. Fan intake plenums shall be removed. Damper linkage shall be let go. Damper housing shall be unbolted and removed to gain access to fan blade and motor.
3.1.6. Contractor shall be responsible for removal of any interference items or removals required to allow access, removal and disassembly of fan units. Any interference item so disturbed or removal shall be returned to original situation, in good order, on completion of fan work.

3.1.7. Each motor shall be meggered before removal and after reinstallation. All results to be recorded and given to Chief Engineer.

3.1.8. Fan blades shall be removed. Electric motors shall be unbolted from casings and lowered down through the uptakes to the entrance of the engine room door and then transported to contractors shop facility. Any shims fitted at fan mounting arrangement shall be carefully removed, retained and identified as to relative position.

3.1.9. Motors shall be completely disassembled.

3.1.10. Rotors and stators shall be steam or solvent cleaned and baked. Winding insulation shall be inspected and tested. Windings shall be re-insulated with good quality insulating varnish or equivalent to a marine electrical standard. Winding lead wires and terminal blocks shall be inspected.

3.1.11. Exterior of motor shall be shot blasted clean.

3.1.12. End bell bearing bores shall be measured, recorded and bearing fit determined.

3.1.13. Contractor shall quote, separately, unit cost to bore and bush end bell to re-establish correct bearing fit.

3.1.14. All bearings shall be replaced with new SKF sealed bearings. Contractor shall bid an allowance of $800.00 for supply of new bearings and to be adjusted by 1379 following proof of invoice.

3.1.15. Motors shall be reassembled in good order and painted with two (2) coats of epoxy paint.

3.1.16. Motor shall be bench tested and witnessed by Chief Engineer or his delegate.

3.1.17. Fan blades shall be shot blasted clean.

3.1.18. Fan shall be reinstalled on motor and assembly dynamically balanced using Vibration analysis. Balancing reports shall be given to Chief Engineer.

3.1.19. Motors and fans shall be returned to the ship and installed in the casing with all new hardware and original shims if fitted. Contractor shall insure fans are returned to their original locations. Note: Contractor shall take care when installing the fan and motor units to make sure they are centrally oriented in the duct work and that the fan blades are not touching the housings.

3.1.20. Units shall be reconnected electrically and all removals returned to original condition.

3.1.21. Contractor shall install the damper housing and reconnect up the linkage. Intake plenum shall be installed and bolted in place. Contractor shall supply and install six (6) appropriately sized steel bolts, nuts and lock washers as directed by the Chief Engineer where they are missing into the two (per plenum) brackets which are welded to the uptake frames.

3.1.22. Fan units shall be test run for 30 minutes on each low speed and high speed. Current draw shall be recorded at each speed after 20 minutes running.

3.1.23. Three (3) type written copies of the service report detailing all inspection points, readings recorded, repairs made and parts replaced shall be compiled and made available to Chief Engineer.

3.1.24. All work shall be completed to satisfaction of Chief Engineer.

3.2 Location

3.2.1. "C" Deck aft of wheelhouse bridge wings.
3.2.2. Engine Room Exhaust Casing Port and Starboard

3.3 Interferences

3.3.1 Contractor is responsible for the identification of interference items, their temporary removal, storage and refitting to vessel.

Part 4: PROOF OF PERFORMANCE:

4.1 Inspection

4.1.1. All work shall be completed to the satisfaction of the Chief Engineer.

4.2 Testing

Proper operation shall be tested after installation.

4.3 Certification

N/A

Part 5: DELIVERABLES:

5.1 Drawings/Reports

5.1.1 Contractor shall provide a final service report of all readings, measurements, and service work completed.

5.2 Spares

N/A

5.3 Training

N/A

5.4 Manuals

N/A

Spec item #: E-12	**SPECIFICATION**	TCMSB Field #: N/A
Clean & Pickle Fuel oil Piping		

Part 1: SCOPE:

1.1 The intent of this specification shall be to pickle piping from the Fuel Oil Purifiers to the Port and Starboard Day Tanks, and fitted pipe transits at bulkheads and decks where the pipe passes through.

1.2 This work shall be carried out in Conjunction with the following:

Part 2: REFERENCES:

2.1 Guidance Drawings/Nameplate Data

2.1.1.

2.2 Standards

2.2.1. The following Coast Guard Standards and or Technical Bulletins must be adhered to in the course of executing this specification. Copies of these standards and bulletins can be obtained from the CCG Technical Authority.

2.2.2. Canadian Coast Guard Fleet Safety Manual (DFO 5737)

2.2.3. Coast Guard ISM Confined Space Entry 7.D.9

2.2.4. Coast Guard ISM Hotwork procedures

2.2.5. Coast Guard ISM Fall Protection procedures

2.2.6. Canadian Coast Guard Welding Specifications for Ferrous Materials, Revision 4. (TP6151 E)

2.2.7. CWB CSA 47.1 latest revision Division I, II or III

2.2.8. SSPC-SPT

2.3 Regulations

2.3.1. Canada Shipping Act.

2.4 Owner Furnished Equipment

2.4.1. The contractor shall supply all materials, equipment, and parts required to perform the specified work unless otherwise stated.

Part 3: TECHNICAL DESCRIPTION:

3.1 General

3.1.1. The starboard piping from the purifiers is 4 inch Ø pipe bolted flanges. The following is location of starboard pipe and approximate lengths:

1. Stbd Engine Room Casing Main Deck – 1 section, 16.5 feet length, 1 deck transit
2. Stbd Generator Flat – 1 section, 20 feet length, open transit at deck.
3. Lower Auxiliary Mach. Space – 2 sections, 32 feet length

3.1.2. The port piping from the purifiers is 2 inch Ø pipe bolted flanges. The following is location of port pipe and approximate lengths:

1. Lower Auxiliary Mach. Space – 1 section, 11 feet length
2. Port Generator Flat – 2 sections, 20 feet length, 1 deck transit
3. Incinerator Room – 3 sections, 29 feet length, 1 deck transit

3.1.3. The piping shall be disconnected and sent ashore for pickling. Fitted deck transits shall be pickled in-situ.

3.1.4. One section of 4 inch Ø pipe in the generator flat aft of SS generator shall be cut in two places and fitted with bolted flanges for removal purposes. The next section of pipe extends into Lower Auxiliary Mach. Compartment is flanged above and below the generator flat deck, hence not allowing the pipe to be removed. This shall be cut just below the deck and fitted with bolted flanges for removal purposes. All modified pipe with flanges new flanges shall be pressure tested at 150 psi.

3.1.5. All piping shall be returned to the vessel and reassembled.

3.1.6. All flanges shall be wire brushed cleaned to bare metal and fitted with new gaskets approved for diesel fuel when reassembled.

3.1.7. Following the reassembling of the pipes, all connections shall be proven liquid tight by normal operation of liquid media.

3.2 Location

3.2.1. Starboard Engine Room Casing Main Deck

3.2.2. Generator Flat Port and Starboard

3.2.3. Incinerator Compartment Main Deck Port

3.3 Interferences

3.3.1 Contractor is responsible for the identification of interference items, their temporary removal, storage and refitting to vessel.

Part 4: PROOF OF PERFORMANCE:

4.1 Inspection

4.1.1. All work shall be completed to the satisfaction of the Chief Engineer.

4.2 Testing

Testing for leaks after installation.

4.3 Certification

N/A

Part 5: DELIVERABLES:

5.1 Drawings/Reports

5.1.1 The Chief Engineer shall receive a typed written report in electronic format for work carried out.

5.2 Spares

N/A

5.3 Training

N/A

5.4 Manuals

N/A

Spec item #: E-13	**SPECIFICATION**	TCMSB Field #: N/A
Crankcase Vent Pipe Relocation		

Part 1: SCOPE:

1.1 The intent of this specification shall be to relocate the 4 Main Engine crankcase vent pipes. They are routed from the four main engines to the exterior aft superstructure bulkhead at the main deck level. This document is intended to provide a baseline scope of work pertaining to re-routing of vent pipes such that they terminate at the casing top port and starboard.

Part 2: REFERENCES:

2.1 Guidance Drawings/Nameplate Data

63-00-01	Arrangement Main Engine, Diesel Generator & Incinerator Exhaust System
62-00-02	Machinery Space Ventilation Engine Room

2.1.1.

2.2 Standards

2.2.1. The following Coast Guard Standards and or Technical Bulletins must be adhered to in the course of executing this specification. Copies of these standards and bulletins can be obtained from the CCG Technical Authority.
2.2.2. Canadian Coast Guard Fleet Safety Manual (DFO 5737)
2.2.3. Coast Guard ISM Confined Space Entry 7.D.9
2.2.4. Coast Guard ISM Hotwork procedures
2.2.5. Coast Guard ISM Fall Protection procedures
2.2.6. Canadian Coast Guard Welding Specifications for Ferrous Materials, Revision 4. (TP6151 E)
2.2.7. CWB CSA 47.1 latest revision Division I, II or III
2.2.8. SSPC-SPT

2.3 Regulations

2.3.1. Canada Shipping Act.

2.4 Owner Furnished Equipment

2.4.1. The contractor shall supply all materials, equipment, and parts required to perform the specified work unless otherwise stated.

Part 3: TECHNICAL DESCRIPTION:

3.1 General

CONTRACTOR SCOPE OF WORK

3.1.1 Contractor Responsibility

This section describes the general scope of work under the responsibility of the Contractor.

While every effort has been made to capture the extent of impact on existing vessel arrangements, the Contractor shall carry out their own familiarization prior to commencing the work.

In the course of planning or execution of the work, the Contractor is welcome to make suggestions for means of accelerating the completion of the work, provided that such means are acceptable to the Chief Engineer and PMC.

The Contractor shall advise CCG on any anticipated deviations from the specified scope of modification prior to the commencement of work in the affected area of the vessel, as far as practicable.

Existing items removed from the vessel shall be stored in a dry and secure location and reinstalled or replaced as directed by CCG.

All new materials, equipment and systems not specifically identified in this document shall be approved by the Chief Engineer prior to procurement.

3.1.2 Execution of the Work

The Contractor shall complete the work in a manner that regards prevailing and forecasted weather conditions, such that CCG property and equipment is suitably sheltered where applicable, does not compromise the structural integrity of the vessel, electrical and/or piping systems, and enables periodic and systematic inspections of ongoing and completed work by the Chief Engineer.

All work shall be completed to the satisfaction of the Chief Engineer. The Contractor shall establish critical milestones at which the work may be inspected.

The Contractor shall provide all ancillary services necessary to complete the work. These may include, but are not limited to strip out, temporary and/or permanent removal of interference items, craneage, staging, cleaning, debris removal, water, shore power, etc.

The Contractor shall remove fittings, fixtures, linings, insulation, wiring, equipment, piping, tubing, machinery, etc. as required to complete the work and replace all removed items as per original once the work is completed and as directed by the Chief Engineer.

The Contractor shall be responsible for ensuring any affected spaces are cleaned, gas freed, and certified for hot work.

Unless otherwise approved, all new pipe to be ASTM A53 or equivalent.

New pipe to be blasted and weldable primer applied where applicable.

All hot work is to be executed in accordance with CSA W59 and CSA W47.1, using weld material of a yield strength equivalent to E-7018 electrodes or as otherwise specified by the weld procedures supplied by the Contractors welding engineer.
All welding of brackets and hangers to be double continuous, having minimum 3/16" leg.
Welding shall be subjected to 100% visual examination, unless approved otherwise by the attending surveyor.

All parts of the vessel remaining in existing condition, which could be impacted or damaged by ongoing work, shall be duly protected. Damaged areas and equipment shall be rectified accordingly.

New steel and disturbed areas shall be cleaned and primed. Final coatings shall be applied as directed by the Chief Engineer.

All affected areas and spaces shall be cleaned, and all debris removed from the vessel once the work has been completed.

3.1.3 Contractor Supply

The Contractor shall supply all material and equipment including piping, hangers, and vapour traps required to complete the work.

3.1.4 Scope of Work

The existing 3" crankcase vent pipes from each of the four main engines are to be removed from the open end on the superstructure bulkhead main deck level to the Victaulic couplings above the vapour traps in the engine room (see photographs 1 & 3, Appendix A). Penetrations in each side of the main deck are to be cropped and replaced using a minimum 12" by 12" insert plate of same thickness as original having 3" radius corners or using existing seams in accordance with IACS 47.

The new pipe is to be 4" schedule 40, painted as directed by CCG personnel. The pipe is generally to be routed as follows (see Appendix A & B for photographs and drawings):

• vertically from the vapour trap to the underside of deck beams, approximately 3m length per pipe then into a 90˚ elbow horizontal (see Photograph 1 in Appendix A).

• longitudinally forward, inboard of the 2-ton hoist rail, into a 45˚elbow outboard past the exhaust piping, into a 45˚ elbow inboard, to the forward casing bulkhead, then into a new vapour trap, similar to existing; approximate length of pipe 10m (see Photograph 2 & 4 in Appendix A).

• extend vertically, keeping outboard of the exhaust support I-beam, approximately 6m, then into a 45˚elbow stepping forward (see Photograph 5 & 6 in Appendix A)
• along the angled line of bulkhead approximately 1m, then into a 45˚ elbow returning to vertical (see Photograph 7 in Appendix A).

• extend vertically approximately 3m then into a 90˚elbow horizontal and inboard (see Photograph 8 in Appendix A).

• horizontally inboard approximately 2m (note brackets as interference items) then into a 90˚ elbow vertically (see Photograph 9 in Appendix A).

• vertically to the top of the exhaust stack, approximately 7m, penetrating the closing plate and terminating in a gooseneck vent (see Photograph 10 in Appendix A).

The above description is for a single pipe run. Each main engine has a separate crank case vent for a total of 4 pipe runs as described above.

Port and starboard piping runs are similar but to opposite hand. Contractor to verify routing on each side before commencement of work.

All pipe connections are to be Victaulic groove. A reducer is to be used to transition from existing 3” pipe at the condensation trap to new 4” pipe.

Pipe penetration at top of stack to be a continuously welded sleeve or diaphragm plate.

Vertical and horizontal pipe runs to be sufficiently supported with pipe hangers and protected from vibration. Hangers to be yard standard.

Horizontal pipe run to be sloped to allow condensation and vapour to drain back to the trap.

3.1.5 GENERAL NOTES

• • Questions of a technical nature arising from this scope of work or the referenced documents shall be directed to the Chief Engineer.

• • Questions of a commercial nature arising from this scope of work or the referenced documents shall be directed to CCG.

• • Should issues arise during periodic inspections by the attending surveyor necessitating action which deviates from the content of this scope of work or the referenced drawings, the Contractor shall contact CCG prior to carrying out any additional work.

3.2 Location

3.2.1. As stated.

3.3 Interferences

3.3.1 The Contractor is responsible for the identification of all interference items, their temporary removal, storage and refitting to vessel.

Part 4: PROOF OF PERFORMANCE:

4.2 Inspection

4.1.1. All work shall be completed to the satisfaction of the Chief Engineer.

4.2 Testing

Proper operation shall be tested after installation.

4.3 Certification

N/A

Part 5: DELIVERABLES:

5.1 Drawings/Reports

5.1.1 Contractor shall provide a final service report of all work completed for this specification.

5.2 Spares

N/A

5.3 Training

N/A

5.4 Manuals

N/A

APPENDIX A
Photographs of existing and proposed pipe routing

Photograph 1 - Aft engine room bulkhead showing location of existing vent pipes and vapour traps.

Photograph 2 - Existing vapour traps.

Photograph 3 - Aft deckhouse bulkhead showing location of existing vent pipes starboard side

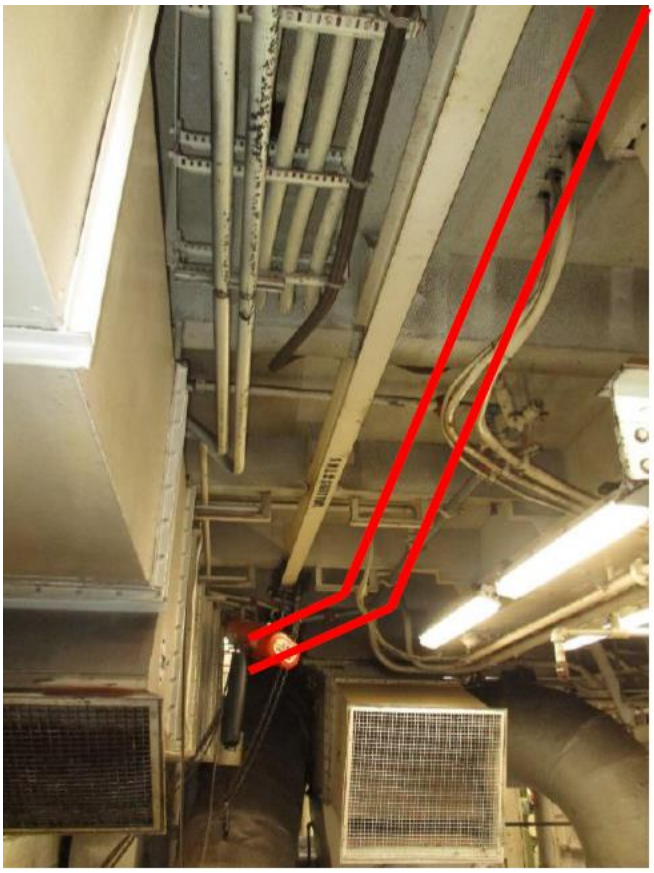

Photograph 4 - Routing of pipe in engine room, inboard of hoist rail port side looking forward

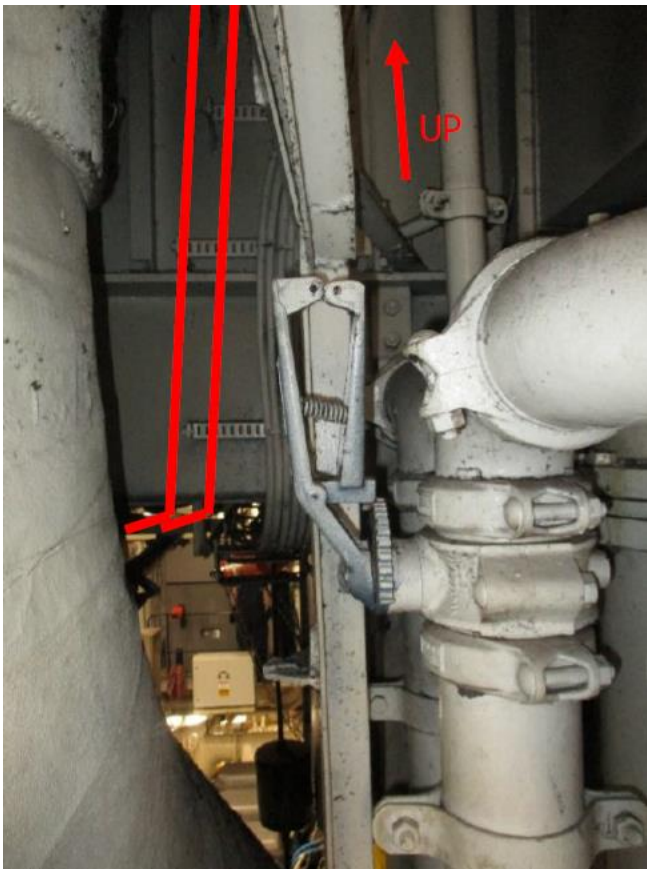

Photograph 5 - Lower edge of port side aft casing bulkhead looking aft

Photograph 6 - Port side aft casing bulkhead looking aft

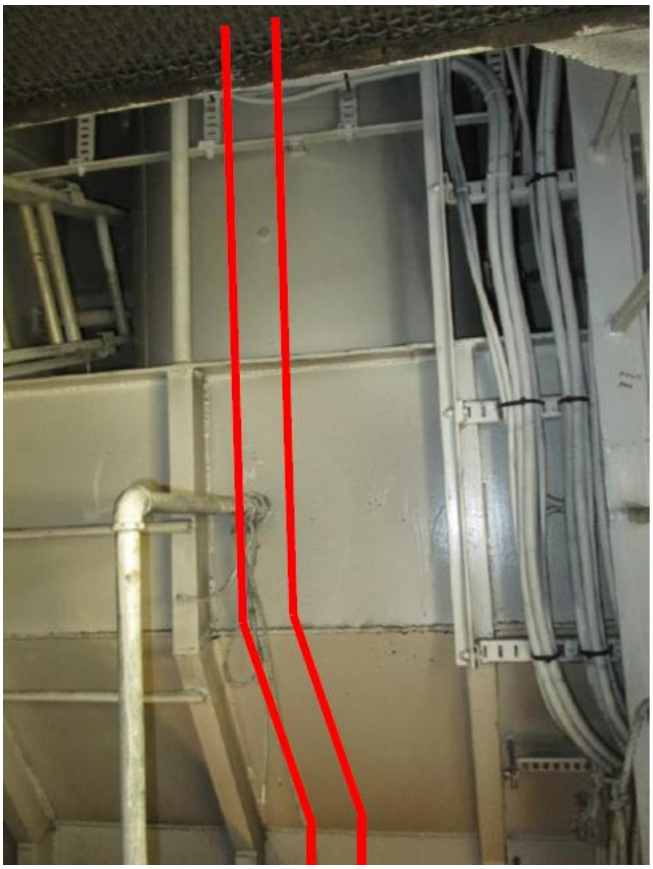

Photograph 7 - Port side aft casing bulkhead in way of step around air plenum looking aft

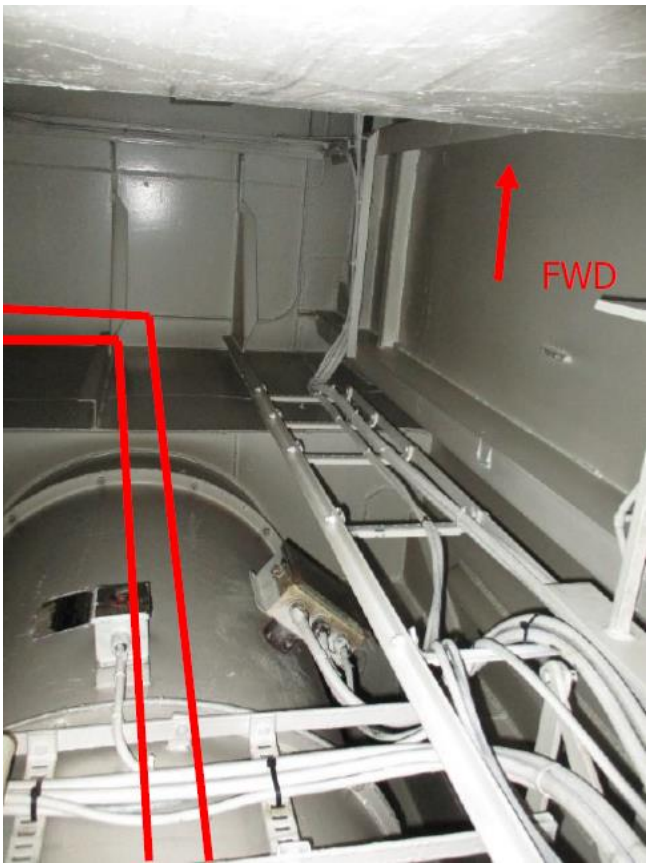

Photograph 8 - Port side aft casing bulkhead at top of air plenum looking up

Photograph 9 - Port side aft bulkhead of exhaust casing, stepping inboard to top portion of casing looking up

Photograph 10 - Location of vent termination at top of casing port side looking to port

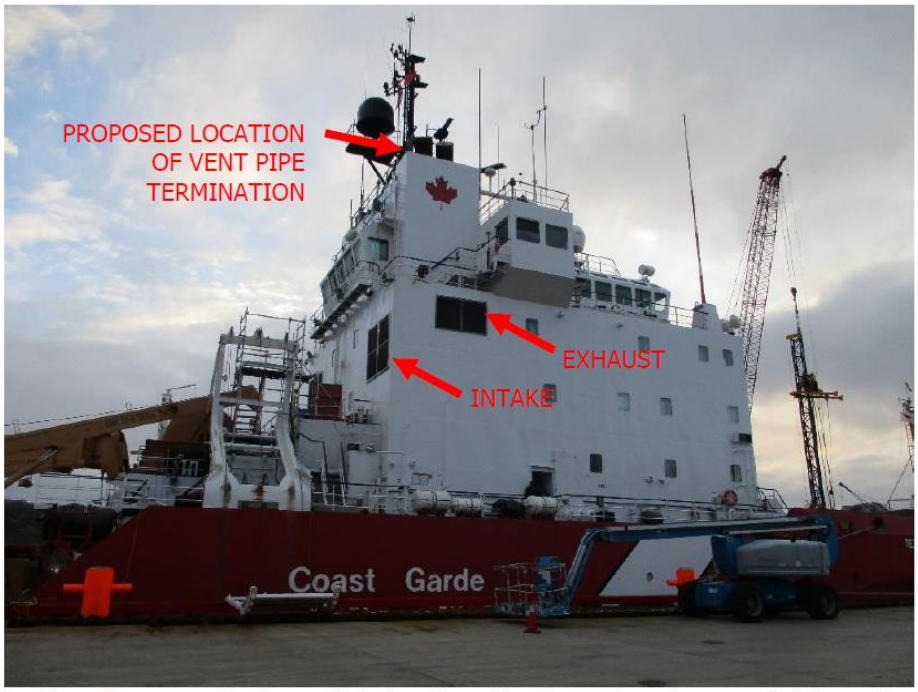

Photograph 11 - Terry Fox superstructure. Note location of casing and engine room intake and exhaust vents.

APPENDIX B
Proposed Vent Pipe Route Drawings

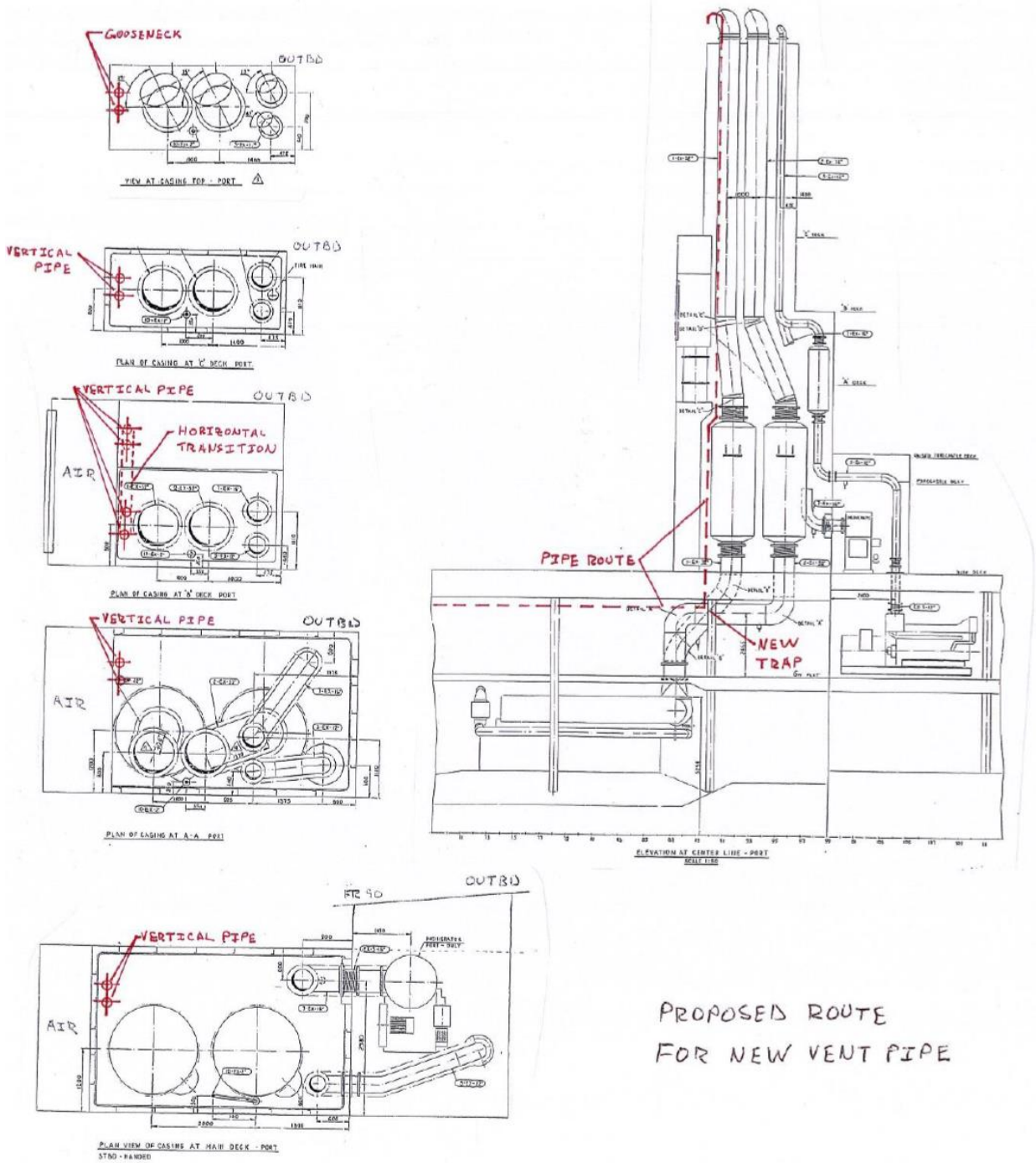

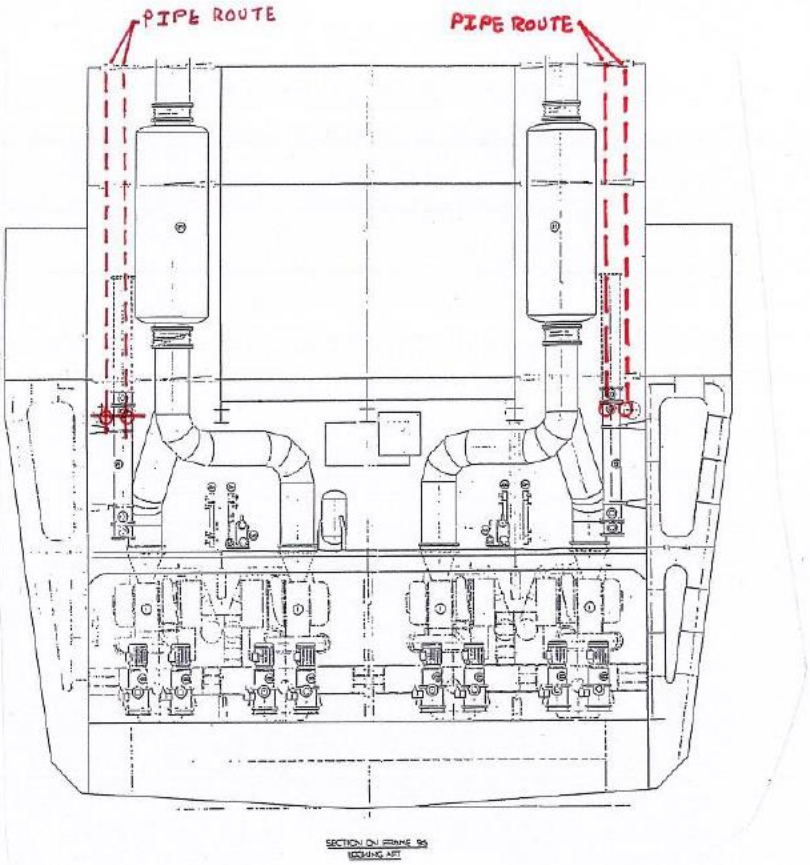

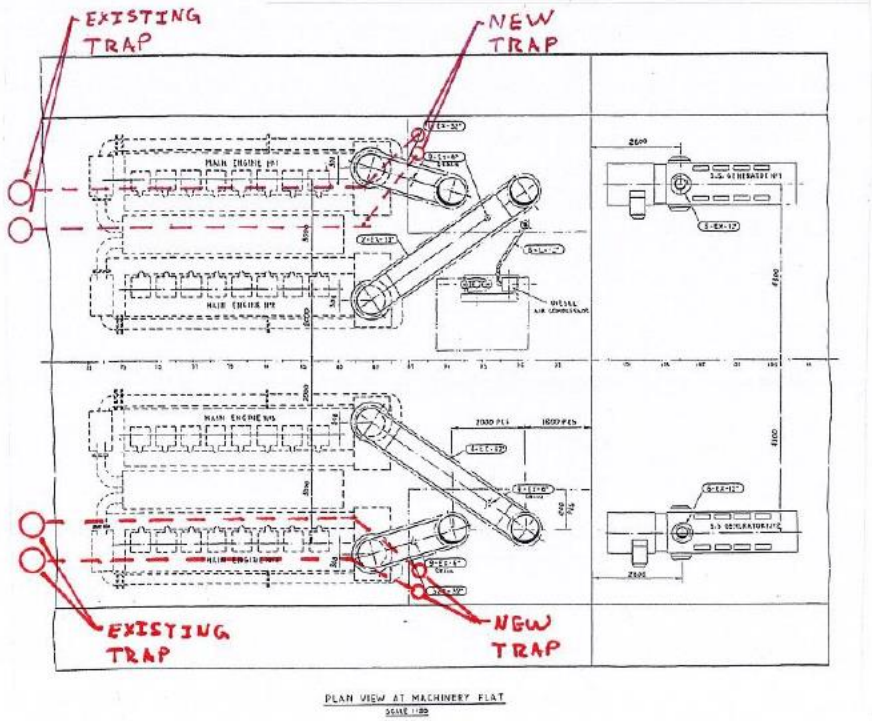

PROPOSED ROUTE FOR NEW VENT PIPE

Spec item #: E-14	**SPECIFICATION**	TCMSB Field #: N/A
EMERGENCY GENERATOR RADIATOR REPLACEMENT		

Part 1: SCOPE:

1.1 The intent of this specification shall be to replace the radiator assembly for the Emergency Generator. The contractor shall obtain the services of Toromont Caterpillar to perform the work.

1.2 This work shall be carried out in Conjunction with the following:

Part 2: REFERENCES:

2.1 Guidance Drawings/Nameplate Data

2.1.1. Caterpillar SIS Radiator Group 8N4880

2.1.2. Emergency Generator Room General Arrangement & Composite Arrangement 60-01-01 Sheet 1&2

2.1.3. Radiator Size: 57”H x 50”W x 13.75”D

2.2 Standards

2.2.1. The following Coast Guard Standards and or Technical Bulletins must be adhered to in the course of executing this specification. Copies of these standards and bulletins can be obtained from the CCG Technical Authority.

2.2.2. Canadian Coast Guard Fleet Safety Manual (DFO 5737)

2.2.3. Coast Guard ISM Confined Space Entry 7.D.9

2.2.4. Coast Guard ISM Hotwork procedures

2.2.5. Coast Guard ISM Fall Protection procedures

2.2.6. Canadian Coast Guard Welding Specifications for Ferrous Materials, Revision 4. (TP6151 E)

2.2.7. CWB CSA 47.1 latest revision Division I, II or III

2.2.8. SSPC-SPT

2.3 Regulations

2.3.1. Marine Machinery Regulations.

2.4 Owner Furnished Equipment

2.4.1. The contractor shall supply all materials, equipment, and parts required to perform the specified work unless otherwise stated.

2.4.2. Coast Guard will supply all parts for the radiator replacement.

Part 3: TECHNICAL DESCRIPTION:

3.1 General

3.1.1. The engine coolant shall be drained and discarded. Hoses connected to the radiator shall be removed and stored for reuse. The flexible transition duct between the radiator and plenum shall be removed and laid aside for reuse.

3.1.2. The fan guard and fan assembly shall be removed and laid aside for reuse. The upper radiator supports shall be disconnected and laid aside for reuse. The drive belt pulley at the crankshaft may have to be removed to allow removal of the radiator assembly. The radiator shall be disconnected from the bottom seats and the radiator removed from the space.

3.1.3. The new radiator assembly shall be installed on the radiator seats of the emergency generator and fastened with new fasteners. The fan assembly, drive belts, and fan guard shall be reinstalled. New CCG supplied drive belts shall be used for reassembly. Hoses and flange adapters shall be reconnected. Flexible transition duct shall be reinstalled. All supports shall be reconnected.

3.1.4. The engine and radiator shall be refilled with coolant and coolant treatment.

3.2 Location

3.2.1. Main Deck, starboard side of winch room. Frame 75-87

3.3 Interferences

3.3.1 Contractor is responsible for the identification of interference items, their temporary removal, storage and refitting to vessel.

Part 4: PROOF OF PERFORMANCE:

4.1 Inspection

4.1.1. All work shall be completed to the satisfaction of the Chief Engineer.

4.2 Testing

Engine shall be started and placed on load to check operation parameters with respect to cooling.

4.3 Certification

N/A

Part 5: DELIVERABLES:

5.1 Drawings/Reports

5.1.1 The Contractor shall provide 3 copies in electronic format of all work performed with this spec item.

5.2 Spares

N/A

5.3 Training

N/A

5.4 Manuals

N/A

Spec item #: ED-01	**SPECIFICATION**	TCMSB Field #: N/A
Port Intermediate Shaft Replacement		

Part 1: SCOPE:

1.1 The intent of this specification shall be to replace the aft # 1 intermediate shaft with a new CCG supplied shaft. The work described in this spec shall be in addition to the Poseidon Marine Consultants SOW 19-046-001 and Drawing 19-045-100

1.2 The contractor shall obtain the services of Wartsila FSR for the disconnection of the sterntube seal, SKF coupling, and the Morgrip Bolts for both ends of the shaft.

1.3 This work shall be carried out in Conjunction with the following:

a. Port Shaft Alignment

Part 2: REFERENCES:

2.1 Guidance Drawings/Nameplate Data

2.1.1. PMC SOW 19-046-001
2.1.2. PMC Removal Drawings 19-045-100

2.2 Standards

2.2.1. The following Coast Guard Standards and or Technical Bulletins must be adhered to in the course of executing this specification. Copies of these standards and bulletins can be obtained from the CCG Technical Authority.
2.2.2. Canadian Coast Guard Fleet Safety Manual (DFO 5737)
2.2.3. Coast Guard ISM Confined Space Entry 7.D.9
2.2.4. Coast Guard ISM Hotwork procedures
2.2.5. Coast Guard ISM Fall Protection procedures
2.2.6. Canadian Coast Guard Welding Specifications for Ferrous Materials, Revision 4. (TP6151 E)
2.2.7. CWB CSA 47.1 latest revision Division I, II or III
2.2.8. SSPC-SPT
2.2.9. (a) TP 127E-TC Marine Safety Electrical Standards.

2.2.10. (b) IEEE Standard 45 - Recommended Practice for Electrical Installation on Shipboard.

2.3 Regulations

2.3.1. TC Marine Machinery Regulations

2.4 Owner Furnished Equipment

2.4.1. The contractor shall supply all materials, equipment, and parts required to perform the specified work unless otherwise stated.

Part 3: TECHNICAL DESCRIPTION:

3.2 General

3.1.1. Due to the importance and sensitivity of the equipment in this specification item, the Contractor shall ensure that grit / sand blasting operations are not carried out in the dry dock for the duration of this specification item.

3.1.2. The contractor shall obtain the services of the Wartsila Propulsion Field Service Rep to supervise the work specified in this specification. Allow $40,000.00 for the services of the representative and adjust the final cost by 1379 action.

3.1.3. The qualified service representative shall be in attendance at all times when this work is being carried out. The procedure listed below shall be used as a guideline only. Contractor and the service representative will co-ordinate activities to ensure the tail shaft is safely moved aft and jacked forward for reconnection. Manuals for use of hydraulic tools are available from the Chief Engineer.

3.1.4. Oil shall be drained from hub and disposed of by Contractor, approximately 1,200 liters of oil in hub assembly.

Rope Guard

3.1.5. Starboard rope guard shall be removed in half sections and lowered to dock floor.

3.1.6. Contractor shall use air-gouging equipment to remove circumferential and butt welds to minimize damage to rope guard landing faces and damage to stern tube bushings. Contractor must install a fire blanket barrier inside the rope guard up against the aft end of the Stern tube bushings to prevent slag from damaging the bushings.

3.1.7. After rope guard has been removed, Contractor shall grind off weld slag and spatter debris on stern tube castings and rope guard landing faces.

3.1.8. Contractor shall quote on the supply and installation of 25 feet of stainless steel locking wire to replace missing or damaged lock wire on stern tube retaining bolts.

3.1.9. To install rope guard, use E 8018 –C1 electrodes and ensure preheat and interpass temperatures in the range of 140°C to 204°C can be maintained during the welding operations. Contractor shall ensure a 10 mm to 15 mm gap is kept between the propeller forward face and the rope guard aft edge. 12 mm continuous fillet welds to be used around rope guard circumference to shaft bracket casting. Butts shall be continuous weld.

3.1.10. Rope guard shall be grit blasted both sides and both sides painted as per painting specification for underwater hull. After installation, welded area paint shall be touched up.

Tailshaft Weardown

3.1.11. Clearances at aft Starboard tail shaft bearings, shall be taken with feeler gauges at 90º intervals around shaft and recorded after the new shaft is installed with new sterntube bearings.

3.1.12. Clearances and poker gage readings shall be taken with the Chief Engineer's designate in attendance. Staging costs shall be included in Contractor's quotation.

3.1.13. Wear down of shaft bearings shall be determined by means of poker gauges. Poker gages for measuring wear down are held onboard the ship and will be made available to the contractor.

3.1.14. Poker and feeler gauge readings shall be recorded with 3 typewritten copies passed to the Chief Engineer within three days.

Sterntube Shaft Seal:

3.1.15. Contractor shall remove the Port stern tube inboard seal assembly to allow the shaft to be pulled aft for the removal of the SKF coupling.

3.1.16. The stern tube seal is a Wartsila UK, 840 MOD 800 Type MA Seal. A manual for stern tube seal is available from the Chief Engineer.

3.1.17. The seal cooling water piping shall be removed and stored as required.

3.1.18. The drive clamp, seat and face inserts shall be removed and laid aside in the Mud Room in same manner to avoid damage to the parts. The remaining seal assembly shall be lifted out of the shaft tunnel as an assembly and laid aside in a safe manner to avoid damage. The MA seal is a fully split face type seal. Wartsila service representative shall be in attendance at all times when this work is being carried out. Contractor and the service representative will co-ordinate activities to ensure correct installation of parts.

3.1.19. The seal assembly shall be reinstalled using CCG supplied parts from Service kit "A".

SKF Coupling Removal:

3.1.20. Area in way of the stern tube seal shall be cleaned of dirt, rust and debris before moving the shaft.

3.1.21. If required, ship staff will rotate shaft to allow for hydraulic connections can be made to SKF coupling. Sections of stern tube cooling water piping and shaft seal water piping may be removed and stowed by Contractor if required. Coast Guard (GSM) shall supply hydraulic pump unit for coupling removals.

3.1.22. To remove the MORGRIP bolts, shaft can be rotated and small port-a-pack jacks can be used with the strong-back to ease out the MORGRIP bolts. Flanges and MORGRIP bolts shall be marked as to their original locations and the bolts taken to the Contractor's machine shop for reference. New MORGRIP bolts will be used with the SKF coupling and the new intermediate shaft.

3.1.23. The SKF coupling shall be temporarily removed from the shaft tunnel for removal of the intermediate shaft. Tail shaft shall be pushed aft a distance of 320 mm using jacks at propeller hub.

3.1.24. Disconnect inner oil pipe, and store flange bolts.

3.1.25. Tailshaft shall be moved another 200 mm aft.

3.1.26. Shaft and coupling location shall be marked at aft end of coupling before pumping coupling off shaft. SKF coupling shall now be pumped off using SKF pump equipment. Contractor shall ensure during removal that coupling is properly supported and does not damage tapered area of shaft. Shaft and coupling tapered sections shall be thoroughly cleaned.

3.1.27. Following the removal and replacement of the intermediate shaft the coupling shall be reinstalled and aligned to the intermediate shaft.

3.1.28. The bolt holes bores of the coupling and intermediate shaft shall be reamed. New Coast Guard supplied MORGRIP bolts will be used for reassembly. The bolts shall be machined to final dimensions to suit the coupling and intermediate shaft bolt hole bores. The old Morgrip bolts shall be cleaned up, measured, and reused if the dimensions will allow. Three (3) typewritten copies of readings shall be given to Chief Engineer.

Connection Flange at Flywheel Location:

3.1.29. The flywheel shall be supported during the removal of the aft intermediate aft. The flywheel is connected to the forward intermediate shaft with a separate ring of bolts at a larger PCD.

3.1.30. The MORGRIP bolts at the connection flange of the forward and aft intermediate shaft shall be removed in the same manner as the coupling flange. Flanges and MORGRIP bolts shall be marked as to their original locations and the bolts taken to the Contractor's machine shop for reference. New MORGRIP bolts will be used with this connection flange of the new intermediate shaft and the forward intermediate shaft.

3.1.31. The shaft shall be jacked aft to access the inner pipes for disconnection.

3.1.32. Following the removal and replacement of the intermediate shaft the shaft flanges shall be aligned for the bolt holes reaming.

3.1.33. The bolt holes bores of the intermediate shafts shall be reamed. New Coast Guard supplied MORGRIP bolts will be used for reassembly. The bolts shall be machined to final dimensions to suit the coupling and intermediate shaft bolt hole bores.

3.1.34. Final diameter measurements of all bolts and bolt holes shall be measured and recorded with referenced to bolt hole numbers. Three (3) typewritten copies of readings shall be given to Chief Engineer.

Shaft Bearings:

3.1.35. The bearing shells shall be removed from the housings and laid aside for reuse. The oil pipe from the housing to the bearing shell shall be removed before rolling out the bottom shell. The temperature transducer probes shall be removed and laid aside for reuse. The oil slinger shall be removed from the bearing and laid aside for reuse.

3.1.36. The bearings are secured on adjustable steel chocks. These shall be tagged for their location and reused.

3.1.37. The bearings are fitted with attached oil lift pumps and motors. These shall be removed and laid aside for reuse.

Post Installation:

3.1.38. The shaft sleeve is now positioned and fastened. Maximum run out should be no more than 0.2 mm.

3.1.39. The shaft shall be rotated by ship's staff to position the vent & drain holes on the propeller hub to the 12 o'clock and 6 o'clock positions respectively.

3.1.40. The CPP system shall be filled with the appropriate oil. The propeller hub vent plug shall be removed. Header tank by pass valve shall be closed. One CPP pump is required with occasional activation of ahead and astern movement from the MCR. NOTE: LIPS service representative to ensure the blades are '0' (zero) pitched before undocking.

3.1.41. Ship's staff will assist in this operation, which takes 7 to 8 hours to complete. When oil has reached the top of the vent hole, the vent plug shall be installed.

3.1.42. System shall be bled of all air from within hub.

3.1.43. System pumps shall be run up and blades moved to ensure free operation.

3.1.44. All removed piping in shaft tunnel shall be installed and pressure tested.

3.1.45. See Starboard Rope Guard installation.

3.1.46. Contractor to include in cost the fitting and removal of any welded lugs required to carry out this work. On completion of this work and before dry dock is flooded, all lug welds shall be ground flush. The area of damaged coating shall be prepared and repaired with Intershield 163 Inerta 160. The coating preparation and application shall be applied as per International Coating specifications.

Shaft Alignment:

3.1.47. Shaft alignment shaft be completed following the refloat of the vessel.

3.1.48. All tools provided by CCG shall be cleaned and returned to storage areas and secured under the supervision of Chief Engineer's designate.

3.1.49. The completed installation shall be functionally tested during sea trials.

3.2 Location

3.2.1.

3.3 Interferences

3.3.1 Contractor is responsible for the identification of interference items, their temporary removal, storage and refitting to vessel.

Part 4: PROOF OF PERFORMANCE:

4.1 Inspection

4.1.4. All work shall be completed to the satisfaction of the Chief Engineer, ABS Surveyor and Wartsila FSR.

4.2 Testing

Proper operation tested at Sea trials.

4.3 Certification

N/A

Part 5: DELIVERABLES:

5.1 Drawings/Reports

5.1.1 The Chief Engineer shall receive a typed written report in electronic format for work carried out including all readings, measurement, temperatures, pressures, etc.

5.2 Spares

N/A

5.3 Training

N/A

5.4 Manuals

N/A

CCGS Terry Fox

88m Heavy Ice Breaker
Port Side Intermediate Shaft #1 Removal

OUTLINE SCOPE OF WORK

Doc. No. 19-046-001

Rev. 0

21 October 2019

Prepared For:

CCG Supervisor / Engineering – St. John's

PO Box 5667

St. John's, NL A1C 5X1

Prepared By:

Poseidon Marine Consultants Ltd.

391 Stavanger Drive

St. John's, NL, Canada A1A 0A1

TABLE OF CONTENTS

1.0 PURPOSE

This document is intended to provide the scope of work to be completed by a qualified Contractor to allow for the removal and replacement of the port side intermediate shaft #1 on CCGS Terry Fox.

2.0 REFERENCE DRAWINGS AND DOCUMENTS

19-046-100 R0	Port Side Intermediate Shaft #1 Removal	Poseidon Marine Consultants
2365-01-00 R1	Cargo Hold Tween Deck Structure Arrangement	Marine Services International
61-00-01 R1	Arrangement & Details of Shafting	Burrard Yarrows Corporation
07-10-08/13 R4	Main Deck	Burrard Yarrows Corporation
T13-1051 R7	General Arrangement Profile and Main Deck as Fitted	Fisheries and Oceans Canada Canadian Coast Guard Maritimes

3.0 DEFINITIONS AND ABBREVIATIONS

Contractor	TBD	Refit/Repair Contractor
CCG	Canadian Coast Guard	Vessel Owner
PMC	Poseidon Marine Consultants Ltd.	Naval Architect / Technical Consultant
ABS	American Bureau of Shipping	RO on Behalf of Transport Canada

4.0 PROJECT OVERVIEW

CCGS Terry Fox is an 88m long, twin-screw heavy ice breaker / supply tug. The port intermediate shaft #1 must be removed from vessel and replaced with a new shaft. In order to facilitate removal of the shaft, an access path must be temporarily cut in way of main deck, upper mud room deck and lower mud room deck. The new shaft is to be installed through the same access path by reversing steps in the lifting plan developed for removal.

5.0 CONTRACTOR SCOPE OF WORK

5.1 General Requirements

5.1.1 Contractor Responsibility

This section describes the general scope of work under the responsibility of the Contractor.

While every effort has been made to capture the extent of work, the Contractor shall carry out their own familiarization prior to commencing the work.

In the course of planning or execution of the work, the Contractor is welcome to make suggestions for means of accelerating the completion of work, provided that such means are acceptable to CCG and ABS.

The contractor shall advise CCG on any anticipated deviations from the supplied scope of work prior to the commencement of work, as far as practicable.

The Contractor shall provide a project manager who shall remain on site for the duration of the work.

Removed plating to be re-used it possible however if new plate or structure is required, main deck plating to be EH36 or equivalent, other steel to be mill certified Lloyd's Grade A or equivalent.

All new materials, equipment and systems not specifically identified in this document shall be approved by CCG and/or ABS prior to procurement.

The Contractor shall be responsible for directing the work of subcontractors where necessary to carry out the work. Subcontractors shall be approved by CCG. The Contractor shall arrange ABS inspectors as required with the inspection costs to be covered by CCG.

CCG shall supply the new intermediate shaft to the Contractor and at that time the Contractor will become responsible for the shaft and any damages that may occur.

5.1.2 Inspections and Surveys

All work shall be completed to the satisfaction of CCG and ABS. The Contractor shall establish critical milestones at which the work may be inspected.

All parts of the vessel remaining in existing condition, which could be impacted or damaged by ongoing work, shall be duly protected. Damaged areas and equipment shall be rectified accordingly.

5.1.3 Contractor Deliverables

Prior to commencing the work, the Contractor shall provide a schedule for the work showing each task and all resources associated with each task.

5.1.4 Execution of the Work

In general, the Contractor shall complete the work in a manner that:

- Regards prevailing and forecasted weather conditions, such that CCG property and equipment is suitably sheltered where applicable.
- Does not compromise the structural integrity of the vessel.
- Enables periodic and systematic inspections of ongoing and completed work by CCG and ABS.
- Steel work shall be completed using good ship repair practices, generally in accordance with IACS 47.

In preparation for the work, the Contractor shall:

- Provide all ancillary services necessary to complete the subject work. These may include, but are not limited to strip out, craneage, staging, cleaning, debris removal, water, shore power, etc.
- Develop a detailed lifting plan, and ensure all lifting equipment is certified, fit for use and properly rated for associated loads. Ensure all lifts are carried out using the proper equipment and angles of rigging are within acceptable limits.
- Remove furnishings, fittings, fixtures, linings, deck coverings, machinery, electrical, piping, hydraulics, etc. as required to complete the work. Existing items being temporarily removed from the vessel shall be stored in a dry and secure location that is acceptable to CCG and protected from damage. Items are to be re-used as far as practicable.
- Ensure remaining items and work area are properly protected to prevent damage.
- Provide all appropriate permits required to complete the work.

During the completion of the work, the Contractor shall:

- Supply fire watch with appropriate class portable fire extinguisher and charged fire hose ready for use while hot work is ongoing
- Subject work to inspection as coordinated with CCG and ABS personnel.

- Ensure work is completed to the satisfaction of CCG and ABS.

Following the completion of the work, the Contractor shall:

- Complete ND testing as required and subject work to final inspections by CCG and ABS. NDT shall be as follows:
  - All welds 100% visual examination
  - Fillet welds and any partial penetration welds 100% MPI
  - Any complete penetration welds 100% UT

- Re-install furnishings, fittings, fixtures, linings, deck coverings, machinery, electrical, hydraulics, etc. that were removed to complete the work.

- Test and commission all new equipment and affected systems to the satisfaction of CCG and/or ABS.

- Apply internal and external coatings as per original paint specification and as directed by CCG personnel.

- Clean affected spaces and remove debris from vessel.

5.2 Scope of Work

The following sections outline the scope of work to be completed. Refer to **Appendix A** for photographs.

5.2.1 Preparation

The Contractor shall ensure all necessary equipment and materials required to complete the work is onsite prior to commencing.

A kick-off meeting shall be held together with CCG and all subcontractors prior to work commencing.

The Contractor, along with all subcontractors shall survey the vessel with CCG prior to commencing work to agree on the existing condition of the vessel. Once the work is complete the vessel shall be returned in the same condition as agreed prior to starting the work. A final inspection shall be conducted once the work is complete for acceptance by CCG. The Contractor shall be responsible for replacing/repairing any damaged items identified in the final inspection.

Suitable protection shall be fitted to prevent mechanical damage or damage due to hot work in the respective areas of the work. Care shall be taken to minimize damage to paint coatings.

All items that are removed shall be tagged to allow for ease of re-installation.

5.2.2 Strip Out

Fire protection equipment and other electrical equipment in way of the removal path shall be removed and stored for re-use. Lifting beam for chain hoist below main deck and below tween deck shall be removed in way of access path. Any other interference items not specifically mentioned to be dealt with in a similar manner as appropriate.

The Contractor shall remove deck head and stiffener insulation in way of the deck cutouts. The Contractor shall cut access through main deck, upper mud room deck and lower mud room deck as describe in PMC DWG No. 19-046-100 Rev 0.

5.2.3 Access Path

It is the responsibility of the Contractor to determine final locations and quantity of lifting lugs based on the lifting plan. It shall be the responsibility of the Contractor to fit temporary pillars in way of lifting lugs if placed near main transverse that has been temporarily removed for access. All welding on lifting lugs shall be subject to 100% MPI testing prior to use.

5.2.3.1 Main Deck

The Contractor shall remove wood sheathing and cut access in the port side of the main deck as depicted in PMC DWG No. 19-046-100 Rev 0. The Contractor shall crop and removed web frame at Fr. 36 in way of temporary deck cutout. The deck cutout is approximately 2900 mm long x 1385 mm wide and located between frames 33-39, with inboard edge approximately 2050 mm off centerline. The deck plating, with longitudinal structure attached, shall be temporarily removed and stored for re-use. A temporary coaming shall be placed around the perimeter of the cutout to prevent water from entering the space below. Handrails shall be fitted around the opening in the deck.

5.2.3.2 Upper Mud Room

The Contractor shall cut access in the port side of the upper mud room deck as depicted in PMC DWG No. 19-046-100 Rev 0. The deck cutout is approximately 2900 mm long x 1270 mm wide and located between frames 33-39, with inboard edge approximately 2050 mm off centerline. The Contractor shall temporarily remove deck plating with structure attached and store for re-use. Handrails shall be fitted around the opening in the deck.

5.2.3.3 Lower Mud Room

The Contractor shall cut access in the port side of the lower mud room deck as depicted in PMC DWG No. 19-046-100 Rev 0. The deck cutout is approximately 4390 mm long and 1390 mm wide and located between frames 36-49, with inboard edge approximately 2650 mm off centerline. The Contractor shall temporarily remove deck plating with structure attached and store for re-use. Handrails shall be fitted around the opening in the deck.

5.2.4 Intermediate Shaft #1 Removal

The Contractor shall fabricate/provide rigging for the removal of intermediate shaft, designed for a working load limit (WLL) that exceeds the weight of the shaft, approximately 9000 kg with pipes and oil removed. A factor of safety is to be included as determined by the Contractor, appropriate to this operation. PMC DWG No. 19-046-100 R0 illustrates a suggested sequence for removal of intermediate shaft however, it is at the Contractor's discretion to complete safe removal. Care shall be taken to ensure the shaft does not come into contact with any equipment or structure that is still in place onboard.

The Contractor shall release intermediate shaft #1 from tail shaft coupling and fly wheel. Tail shaft is to be pulled back and C.P.P. connections removed. The shaft bearings located at Fr. 41 and Fr. 50, and bulkhead gland at Fr. 48, shall be removed and stored for re-use if practicable. The Contractor shall ensure the shaft is properly supported according to lifting plan.

It is intended to lower a crane hook through the access path and attach to the aft end of intermediate shaft #1. The forward end of the shaft shall be rigged/supported to facilitate vertical and longitudinal motion. As the aft end is lifted vertically, the forward end shall move horizontally aft.

5.2.5 New Intermediate Shaft #1 Installation

The new shaft shall be lowered into position by reversing the sequence of removal. Care shall be taken to ensure the shaft does not come in to contact with any equipment or structure that is still in place onboard.

Once the shaft is in place, cutouts in the main deck, lower mud room deck and upper mud room deck shall be re-installed using sections removed as far as practicable, and welding completed and tested to the satisfaction of ABS. Any new main deck plating shall be EH. 36, all other new steel shall be Lloyd's Grade A as required.

Once the new shaft is in place the Contractor shall re-install C.P.P fittings, couplings and bearings as per manufacturer's directions. The Contractor shall proceed to re-install all equipment, insulation and items that were temporarily removed and return the vessel to its original condition.

All lifting lugs that were installed shall be removed and remaining weld material ground smooth. Care should be taken to prevent undercutting of existing structure.

All components previously removed to allow for the replacement of the shaft shall be re-installed as per original.

ND testing shall be performed prior to fitting insulation and coatings. Coatings shall be applied to all new welding and disturbed/damaged areas as per original paint specification. Areas shall be feathered back to allow for proper coating adhesion. The insulation/paint subcontractor shall apply all coatings.

NOTES:

1. THIS DRAWING SPECIFIES REQUIRED TEMPORARY MODIFICATIONS TO THE SUBJECT VESSEL TO REMOVE AND REPLACE PORT SIDE INTERMEDIATE SHAFT #1.
2. AS-FITTED MATERIALS AND WELDING TO BE COMPLETED TO THE SATISFACTION OF CLASS AND CCG.
3. ALL DIMENSIONS IN MILLIMETERS UNLESS NOTED OTHERWISE. SPECIFICATION OF NEW MATERIALS IN IMPERIAL UNITS TO REFLECT LOCAL SUPPLY. ALL DIMENSIONS TO BE CHECKED AGAINST VESSEL PRIOR TO COMMENCEMENT OF WORK.
4. MAIN DECK PLATING TO BE EH. 36 OR APPROVED EQUIVALENT. ALL NEW STEEL OTHERWISE TO BE MILL CERTIFIED LLOYD'S GRADE A OR APPROVED EQUIVALENT.
5. NEW STEEL TO BE BLASTED AND PRIMED.
6. ALL HOT WORK TO BE EXECUTED IN ACCORDANCE WITH CSA W59 AND CSA W47.1 USING E-480XX (OR APPROVED EQUIVALENT) ELECTRODES.
7. ALL WELDING TO BE DOUBLE CONTINUOUS, ¼" LEG LENGTH, UNLESS NOTED OTHERWISE.
8. NDT SHALL BE AS FOLLOWS:

   -ALL WELDS 100% VISUAL EXAMINATION.
   -FILLET WELDS AND ANY PARTIAL PENETRATION WELDS 100% MPI.
   -ANY COMPLETE PENETRATION WELDS 100% UT.
9. ALL NEW STEEL TO BE COATED IAW OWNER'S PAINT SCHEME. AFFECTED AREAS OF EXISTING STEEL TO BE RESTORED TO ORIGINAL CONDITION.

REFERENCE DRAWINGS:

2365-01-00 R1	"CARGO HOLD TWEEN DECK STRUCTURE ARRANGEMENT" MARINE SERVICES INTERNATIONAL
61-00-01 R1	"ARRANGEMENT & DETAILS OF SHAFTING" BURRARD YARROWS CORPORATION
07-10-08/13 R4	"MAIN DECK" BURRARD YARROWS CORPORATION
T13-1051 R7	"GENERAL ARRANGEMENT PROFILE AND MAIN DECK AS FITTED" FISHERIES AND OCEANS CANADA CANADIAN COAST GUARD MARITIMES

ABBREVIATIONS:

BKT	-	BRACKET
FF	-	FACE FLAT
OA	-	ORDINARY ANGLE
TYP	-	TYPICAL DETAIL OR DIMENSION
WTB	-	WATERTIGHT BULKHEAD
W	-	WEB

REV	DATE	DESCRIPTION	BY	CHK	APP	CLT
0	21 OCT 19	ISSUED FOR USE	MDP	SRM	-	-

Poseidon marine consultants limited
391 STAVANGER DRIVE, ST. JOHN'S, NL, CANADA P: (709) 739-4321
154 HAMPTON ROAD SUITE 104 ROTHESAY, NB, CANADA P: (506) 651-5588
W: www.pmcl.ca

CLIENT: CANADIAN COAST GUARD

VESSEL: CCGS TERY FOX

TITLE: PORT SIDE INTERMEDIATE SHAFT #1 REMOVAL

TCWS:	PROJECT NO.: 19-046	DWG. NO.: 19-046-100	
CLASS:	SCALE/SIZE: N.T.S. / 11x17	SHEET: 1 OF 7	DATE: 21 OCT 19

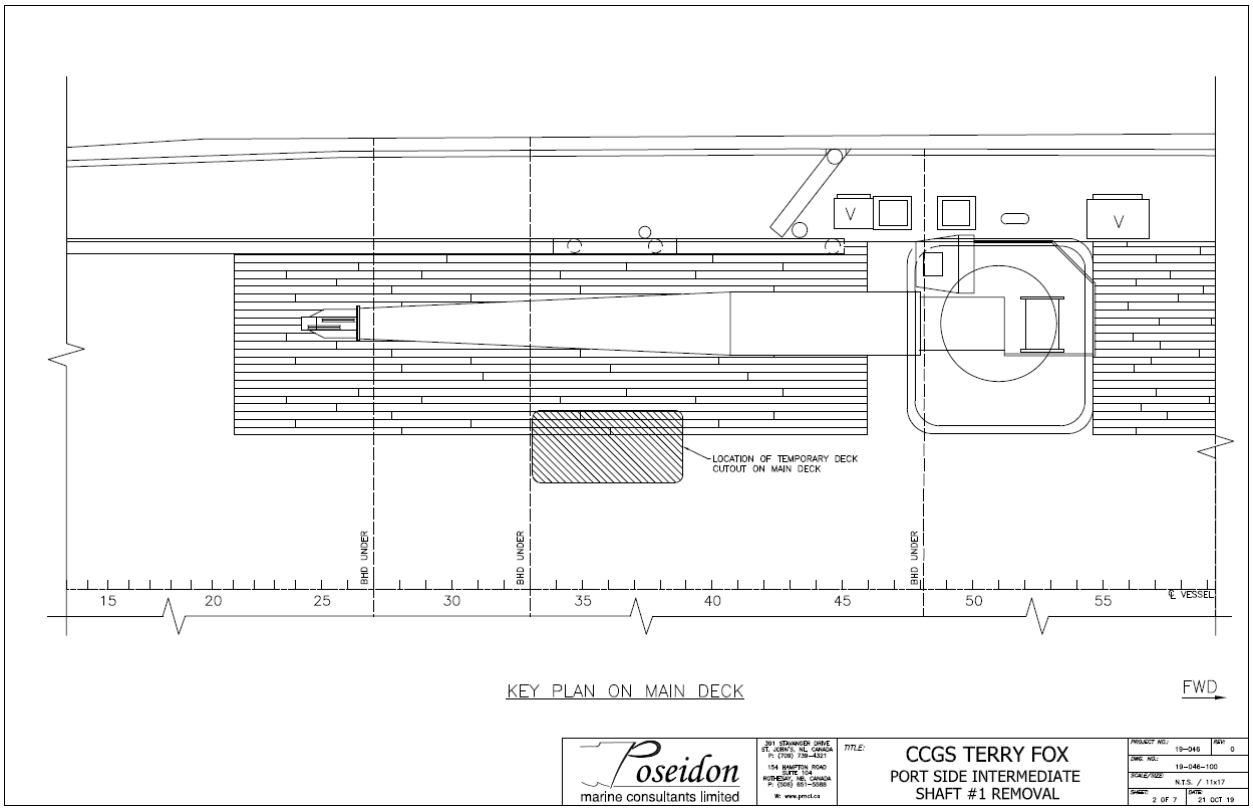

Poseidon marine consultants limited

391 STANNIGER DRIVE
ST. JOHN'S, NL CANADA
P: (709) 739-4321
154 SHAFTON ROAD
SUITE 104
BURLINGTON, ONTARIO CANADA
P: (905) 681-3088
W: www.pmcl.ca

TITLE:

CCGS TERRY FOX
PORT SIDE INTERMEDIATE
SHAFT #1 REMOVAL

PROJECT NO.: 19-049	REV: 0
DWG NO.: 19-046-100	
SCALE/SIZE: N.T.S. / 11x17	
SHEET: 2 OF 7	DATE: 21 OCT 19

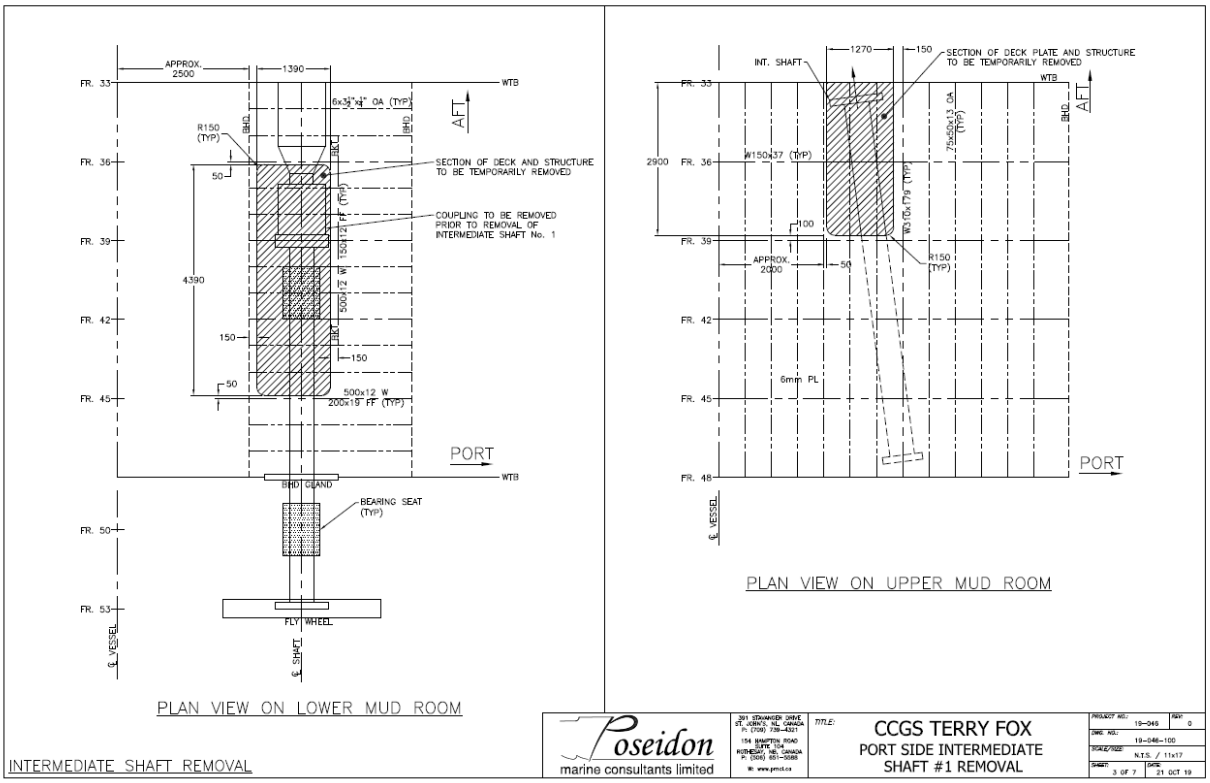
APPROX. 2500
1390
FR. 33
WTB
6x3½"x¼" OA (TYP)
AFT
R150 (TYP)
BHD.
FR. 36
50
SECTION OF DECK AND STRUCTURE TO BE TEMPORARILY REMOVED
COUPLING TO BE REMOVED PRIOR TO REMOVAL OF INTERMEDIATE SHAFT No. 1
150x12 FF (TYP)
FR. 39
4390
500x12 W
FR. 42
150
FR. 45
500x12 W
200x19 FF (TYP)
PORT
BHD. GLAND
BEARING SEAT (TYP)
FR. 50
FR. 53
FLY WHEEL
℄ VESSEL
℄ SHAFT
PLAN VIEW ON LOWER MUD ROOM
INT. SHAFT
1270
150
SECTION OF DECK PLATE AND STRUCTURE TO BE TEMPORARILY REMOVED
2900
W150x37 (TYP)
75x50x13 OA (TYP)
W310x79 (TYP)
100
APPROX. 2000
R150 (TYP)
6mm PL
FR. 48
PLAN VIEW ON UPPER MUD ROOM
INTERMEDIATE SHAFT REMOVAL
Poseidon
marine consultants limited
391 SOMERSIDE DRIVE
ST. JOHN'S, NL CANADA
P: (709) 739-4321
154 MONCTON ROAD
SUITE 104
RICHIBUCTO, NB, CANADA
P: (506) 851-5588
W: www.pmcd.ca
TITLE:
CCGS TERRY FOX
PORT SIDE INTERMEDIATE
SHAFT #1 REMOVAL
PROJECT NO.: 19-046
REV: 0
DWG. NO.: 19-046-100
SCALE/SIZE: N.T.S. / 11x17
SHEET: 3 OF 7
DATE: 21 OCT 19

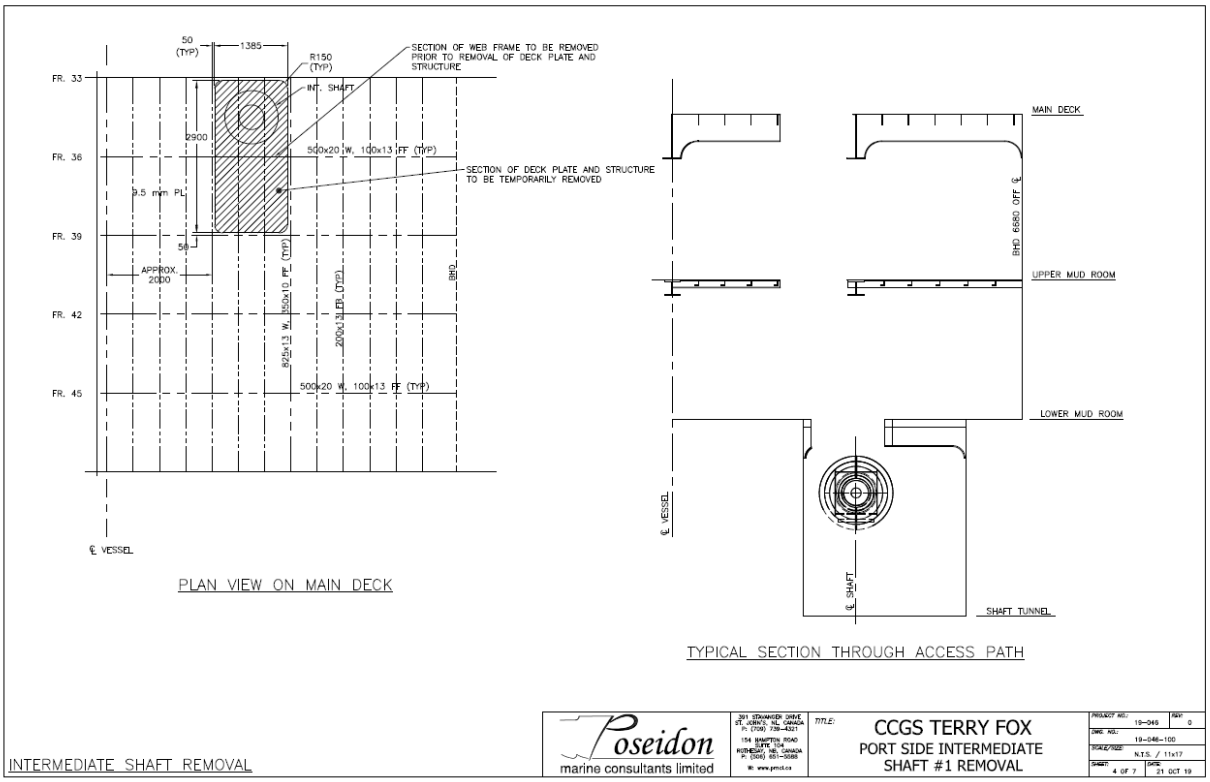

INTERMEDIATE SHAFT REMOVAL

Poseidon marine consultants limited

391 STAVANGER DRIVE, ST. JOHN'S, NL CANADA P: (709) 739-4321
154 MARTIN ROAD DARTMOUTH, NS, CANADA P: (902) 861-3088
W: www.pmcl.ca

TITLE: CCGS TERRY FOX
PORT SIDE INTERMEDIATE SHAFT #1 REMOVAL

PROJECT NO: 19-049	REV: 0
DWG. NO.: 19-046-100	
SCALE/SIZE: N.T.S. / 11x17	
SHEET: 4 OF 7	DATE: 21 OCT 19

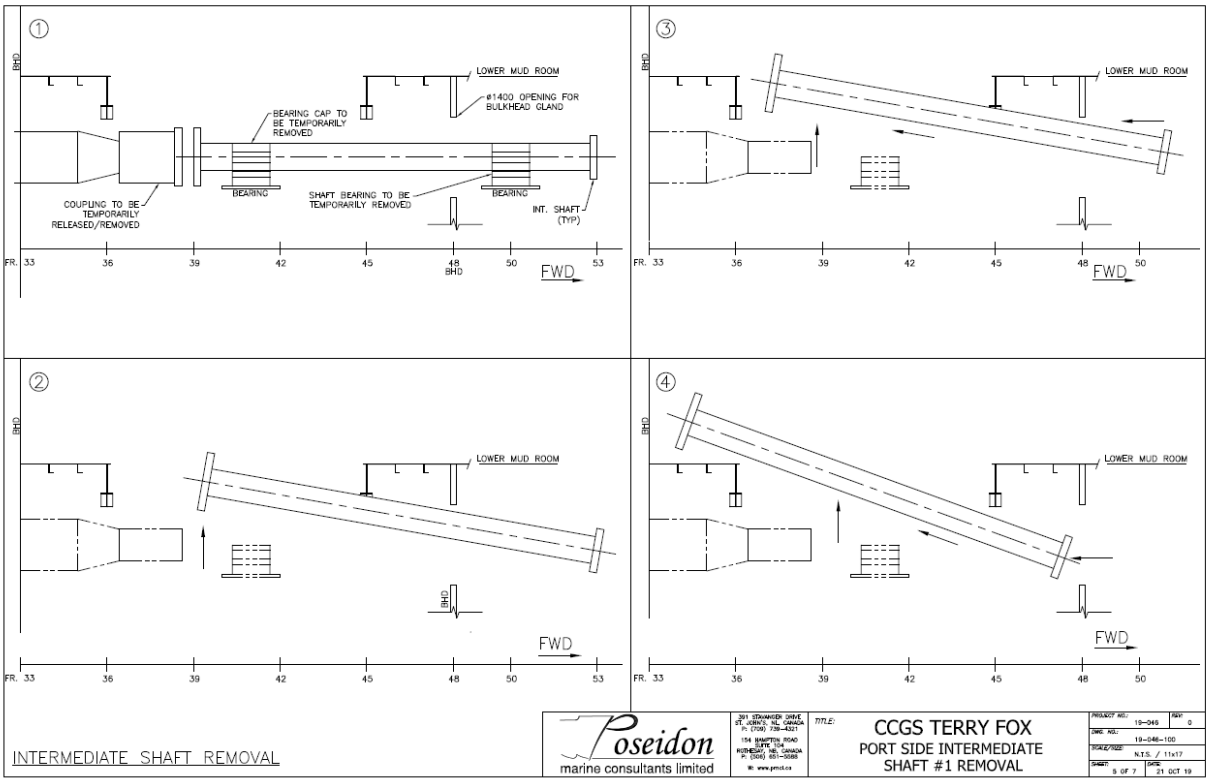

INTERMEDIATE SHAFT REMOVAL

Poseidon marine consultants limited

391 STAVANGER DRIVE, ST. JOHN'S, NL CANADA P: (709) 739-4321

154 HAMILTON ROAD DARTMOUTH, NS, CANADA P: (506) 851-3088

W: www.pmcl.ca

TITLE: CCGS TERRY FOX
PORT SIDE INTERMEDIATE SHAFT #1 REMOVAL

PROJECT NO: 19-049	REV: 0
DWG. NO.: 19-046-100	
SCALE/SIZE: N.T.S. / 11x17	
SHEET: 5 OF 7	DATE: 21 OCT 19

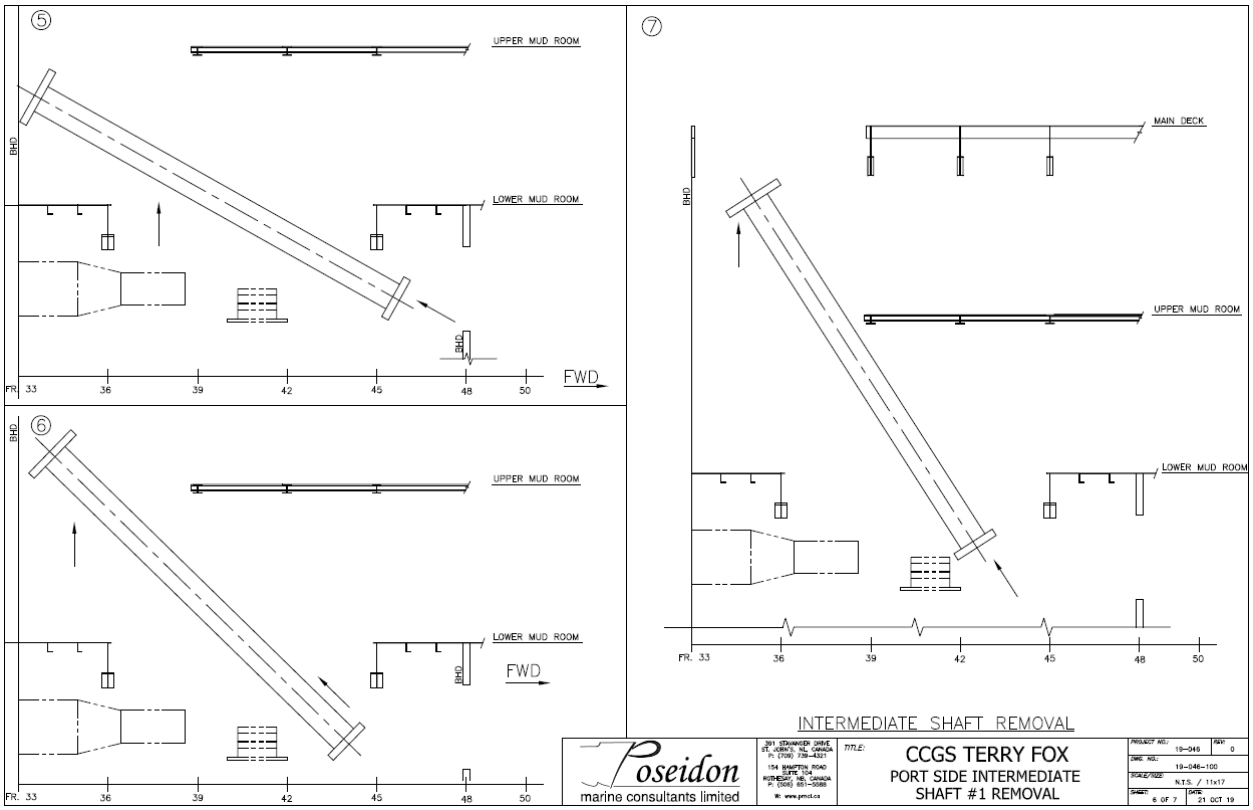
5
UPPER MUD ROOM
LOWER MUD ROOM
BHD
FWD
FR. 33
36
39
42
45
48
50
6
UPPER MUD ROOM
LOWER MUD ROOM
BHD
FWD
7
MAIN DECK
UPPER MUD ROOM
LOWER MUD ROOM
BHD
INTERMEDIATE SHAFT REMOVAL
Poseidon
marine consultants limited
391 STAVANGER DRIVE
ST. JOHN'S, NL CANADA
P: (709) 739-4321
154 SHAFTON ROAD
SUITE 104
RUSSELLTOWN, CANADA
P: (506) 651-3088
W: www.pmcl.ca
TITLE:
CCGS TERRY FOX
PORT SIDE INTERMEDIATE
SHAFT #1 REMOVAL
PROJECT NO.: 19-049
REV: 0
DWG NO.: 19-046-100
SCALE/SIZE: N.T.S. / 11x17
SHEET: 6 OF 7
DATE: 21 OCT 19

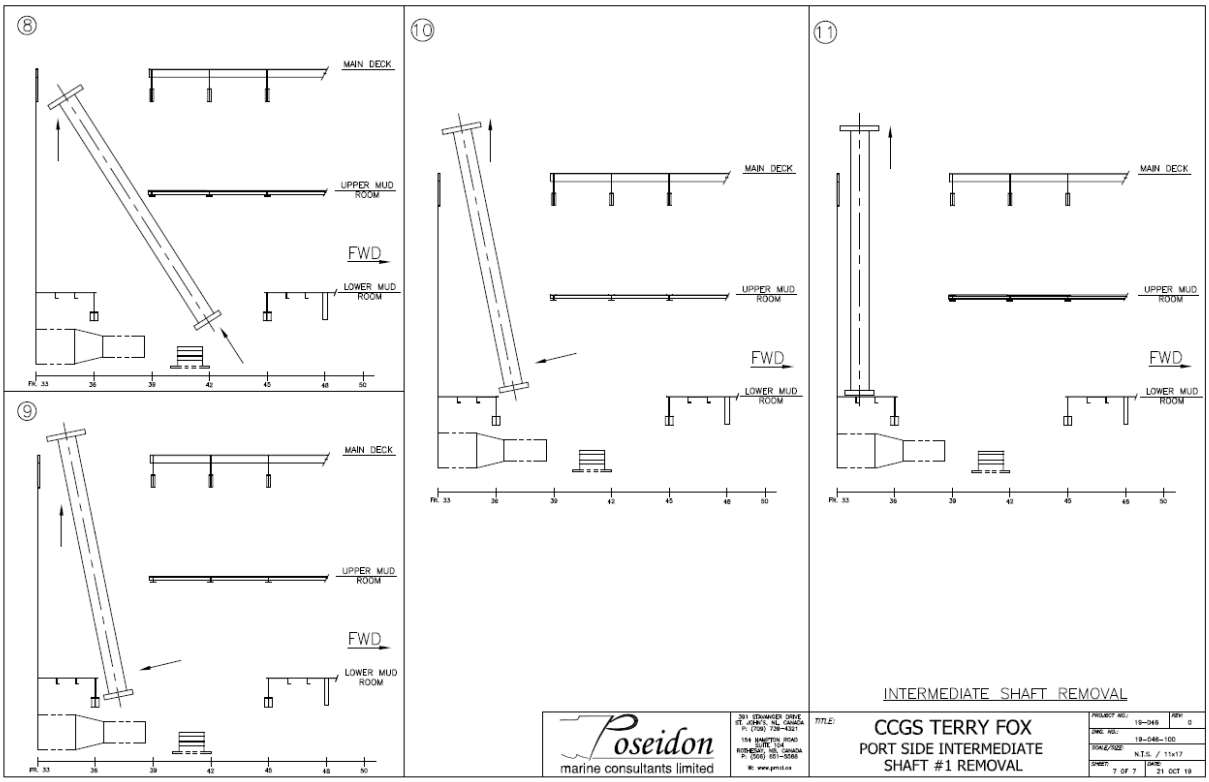
8
MAIN DECK
UPPER MUD ROOM
FWD
LOWER MUD ROOM
FR. 33
36
39
42
45
48
50
9
MAIN DECK
UPPER MUD ROOM
FWD
LOWER MUD ROOM
FR. 33
36
39
42
45
48
50
10
MAIN DECK
UPPER MUD ROOM
FWD
LOWER MUD ROOM
FR. 33
36
39
42
45
48
50
11
MAIN DECK
UPPER MUD ROOM
FWD
LOWER MUD ROOM
FR. 33
36
39
42
45
48
50
INTERMEDIATE SHAFT REMOVAL
Poseidon
marine consultants limited
391 STAVANGER DRIVE
ST. JOHN'S, NL CANADA
P: (709) 739-4321
154 HAMILTON ROAD
SUITE 104
BEDFORD, NS CANADA
P: (506) 651-3088
W: www.pmcl.ca
TITLE:
CCGS TERRY FOX
PORT SIDE INTERMEDIATE
SHAFT #1 REMOVAL
PROJECT NO.: 19-046
REV: 0
DWG. NO.: 19-046-100
SCALE/SIZE: N.T.S. / 11x17
SHEET: 7 OF 7
DATE: 21 OCT 19

Spec item #: ED-02	**SPECIFICATION**	TCMSB Field #: N/A
Port Shafting System Alignment		

Part 1: SCOPE:

1.1 The intent of this specification shall be to check the alignment of the port shaft system from the gearbox running aft.

1.2 This work shall be carried out in Conjunction with the following:
Port Intermediate Shaft Replacement and Survey

Part 2: REFERENCES:

2.1 Guidance Drawings/Nameplate Data

2.1.1. Installation Alignment Main Engines & Gearboxes & Propulsion Shafting # 61-00-SK45
2.1.2. Propulsion Machinery HD Bolts & Chocks # 60-00-04
2.1.3. TFOX Tailshaft

2.2 Standards

2.2.1. The following Coast Guard Standards and or Technical Bulletins must be adhered to in the course of executing this specification. Copies of these standards and bulletins can be obtained from the CCG Technical Authority.
2.2.2. Canadian Coast Guard Fleet Safety Manual (DFO 5737)
2.2.3. Coast Guard ISM Confined Space Entry 7.D.9
2.2.4. Coast Guard ISM Hotwork procedures
2.2.5. Coast Guard ISM Fall Protection procedures
2.2.6. Canadian Coast Guard Welding Specifications for Ferrous Materials, Revision 4. (TP6151 E)
2.2.7. CWB CSA 47.1 latest revision Division I, II or III
2.2.8. SSPC-SPT

2.3 Regulations

2.3.1. Canada Shipping Act.

2.4 Owner Furnished Equipment

2.4.1. The contractor shall supply all materials, equipment, and parts required to perform the specified work unless otherwise stated.

Part 3: TECHNICAL DESCRIPTION:

3.1 General

3.1.1. The following is Wartsila's General Process for Alignment, to be considered only estimations.

- Typically the team requires one day prior to the docking of a vessel.
- One day prior to the shaft dismantling for a reference measurement – hull deflection when compared to the pre docking measurement.
- One day for measurements of the intermediate shafting, to be left in place.
- New calculation for evaluation of current alignment.
- Depending on the findings, the repair process will be adapted to the requirements.
- After repair we need one day for the final set of measurements and installation of portable monitoring system.
- In total we would estimate approximately 10 days, but to be integrated in the docking schedule.

3.1.2. Contractor shall obtain the services of Wartsila Propulsion Alignment Specialist to perform the specified work. Contractor shall have an allowance of $50,000.00 for their services and adjusted by 1379 following proof of invoice. Allow 2 days to perform pre-drydocking alignment checks as reference. Allow 2 days prior to shaft dismantling for a reference measurement hull deflection when compared to pre-docking measurement. Allow 10 days for the alignment and subsequent adjustments while the vessel is floated after drydocking. The contractor shall provide 3 workers to assist in the alignment procedures.

3.1.3. The two shaft bearings IWO Aft Intermediate shaft shall be aligned to the shaft as these were removed to allow for the replacement of the new intermediate shaft.

3.1.4. The shaft line consists of three shaft bearings. The bearings are fitted with steel adjustable chocks.

3.1.5. The final alignment procedure shall be completed while the vessel is afloat and following the drydocking portion of the refit.

3.1.6. The alignment check shall make use of strain gauges, load measuring gauges, displacement, and laser alignment equipment. 3D scanning methods in conjunction with bearing load measurements can be used as well.

3.1.7. The three shaft bearings shall be aligned as instructed by the Wartsila Alignment Specialists.

3.2 Location

3.2.1. Port side Shaft Tunnel

3.2.2. Port Side Aft Lower Auxiliary Machinery Compartment

3.2.3. Aft Main Engine Room

3.3 Interferences

3.3.1 Contractor is responsible for the identification of interference items, their temporary removal, storage and refitting to vessel.

Part 4: PROOF OF PERFORMANCE:

4.1 Inspection

4.1.1. All work shall be completed to the satisfaction of the Chief Engineer, ABS Surveyor and Wartsila FSR.

4.2 Testing

Dock Trial and Sea Trails

4.3 Certification

N/A

Part 5: DELIVERABLES:

5.1 Drawings/Reports

5.1.1 Provide copies of Wartsila service reports and alignment reading.

5.1.2 Provide copies of the main engine to gearbox alignment readings.

5.2 Spares

N/A

5.3 Training

N/A

5.4 Manuals

N/A

Spec item #: ED-03	**SPECIFICATION**	TCMSB Field #: N/A
Steering Pumps & Motors Inspection / Overhaul		

Part 1: SCOPE:

1.1 The intent of this specification shall be to remove the following pump motors for service maintenance and testing. The pumps to be overhauled by a hydraulics company.

1.2 This work shall be carried out in Conjunction with the following:

Part 2: REFERENCES:

2.1 **Guidance Drawings/Nameplate Data**

2.1.1. Steering Gear Pump Motor 2 of
Manufacturer: Baldor
Frame Size: 365TC / Cast iron
HP & Speed: 75 HP@ 1760
V/Ph/Hz: 460/3/60
Enclosure: TEFC

2.1.2. Emergency Steering Gear Pump Motor 1 of
Manufacturer: Baldor
Frame Size: 213TC / Cast iron
HP & Speed: 7.5 HP@ 1725
V/Ph/Hz: 460/3/60
Enclosure: TEFC

2.2 **Standards**

2.2.1. The following Coast Guard Standards and or Technical Bulletins must be adhered to in the course of executing this specification. Copies of these standards and bulletins can be obtained from the CCG Technical Authority.
2.2.2. Canadian Coast Guard Fleet Safety Manual (DFO 5737)
2.2.3. Coast Guard ISM Confined Space Entry 7.D.9
2.2.4. Coast Guard ISM Hotwork procedures
2.2.5. Coast Guard ISM Fall Protection procedures
2.2.6. Canadian Coast Guard Welding Specifications for Ferrous Materials, Revision 4. (TP6151 E)

2.2.7. CWB CSA 47.1 latest revision Division I, II or III
2.2.8. SSPC-SPT
2.2.9. TP127E Ships Electrical Standards

2.3 **Regulations**

2.3.1. Canada Shipping Act.

2.4 **Owner Furnished Equipment**

2.4.1. The contractor shall supply all materials, equipment, and parts required to perform the specified work unless otherwise stated.

Part 3: TECHNICAL DESCRIPTION:

3.1 **General**

3.1.1. All motor units shall be dealt with in the same manner for purposes of clarity.
3.1.2. The pump units shall be locked out by the contractor's lockouts. The vessel's lockout book shall be recorded.
3.1.3. The motors shall be labeled for correct orientation to ensure they are reinstalled on the correct pump and in the correct position. The power supply cables shall be disconnected and labeled. The motors shall be removed from the pump housings and sent to an authorized motor refurbishment facility.
3.1.4. The motor shall be completely disassembled for routine maintenance, inspection and testing. Work shall include but not limited to the following; rotor shaft measurements and run-out, flange face run-out, spigot run-out, shaft end play, bearing housing measurements and run-out, clean dip and bake, dynamic balance, resistance test, bench test run, and vibration readings. New bearings shall be installed.
3.1.5. The units shall be transported back to the vessel and installed as originally found.

3.2 Location

3.2.1 Steering Gear Pump Motor 2 of Frame 4 & 0, P&S Steering Flat
3.2.2. Emergency Steering Gear Pump Motor 1 of Stbd Steering Flat

3.3.1 **Interferences**

3.3.1 Contractor is responsible for the identification of interference items, their temporary removal, storage and refitting to vessel.

Part 4: PROOF OF PERFORMANCE:

4.1 **Inspection**

4.1.1. All work shall be completed to the satisfaction of the Chief Engineer & ABS.

4.2 **Testing**

The pumps units shall be ran and motor bearing temperature recorded every 15 minutes for a 2 hour period. The motor current shall be recorded after the initial start, at each phase.

4.3 **Certification**
N/A

Part 5: DELIVERABLES:

5.1 **Drawings/Reports**

5.1.1 All measurements and readings shall be tabulated in type written format and given to the Chief Engineer.

5.2 **Spares**
N/A

5.3 **Training**
N/A

5.4 **Manuals**
N/A

Spec item #: ED-04	**SPECIFICATION**	TCMSB Field #: N/A
Stbd Tailshaft Replacement		

Part 1: SCOPE:

1.1 The intent of this specification shall be to replace the Starboard tailshaft, SKF coupling, and sterntube bushings with new CCG supplied equipment. Obtain a survey credit from ABS.

1.2 This work shall be carried out in Conjunction with the following:

- Starboard Propeller Blades and Hub Survey

Part 2: REFERENCES:

2.1 Guidance Drawings/Nameplate Data

2.1.1. Contact : Wartsila Canada, Barry Broderick

2.1.2. The following weights are applicable:

Propeller + shaft flange + oil	= 38500 KG
Propeller shaft + pipes + oil	= 46765 KG
Length of tail shaft to forward end of hub	= 13.94 meters
SKF coupling & ring nut	= 2240 KG

2.1.3. LIPS Arrangement Of Shafting Drawing # A006759

2.1.4. Wartsila Type MA Seal Assembly Drawing # H30850-01

2.1.5. Oil Type: Petro Canada Hydrex AW 68

2.1.6. Oil Capacity 1200 liters

2.1.7. Wartsila Water Lubricated Bearing Manual DPM-01

2.2 Standards

2.2.1. The following Coast Guard Standards and or Technical Bulletins must be adhered to in the course of executing this specification. Copies of these standards and bulletins can be obtained from the CCG Technical Authority.

2.2.2. Canadian Coast Guard Fleet Safety Manual (DFO 5737)

2.2.3. Coast Guard ISM Confined Space Entry 7.D.9

2.2.4. Coast Guard ISM Hotwork procedures

2.2.5. Coast Guard ISM Fall Protection procedures

2.2.6. Canadian Coast Guard Welding Specifications for Ferrous Materials, Revision 4. (TP6151 E)

2.2.7. CWB CSA 47.1 latest revision Division I, II or III

2.2.8. SSPC-SPT

2.2.9. (a) TP 127E-TC Marine Safety Electrical Standards.

2.2.10. (b) IEEE Standard 45 - Recommended Practice for Electrical Installation on Shipboard.

2.3 Regulations

2.3.1. Canada Shipping Act.

2.4 Owner Furnished Equipment

2.4.1. The contractor shall supply all materials, equipment, and parts required to perform the specified work unless otherwise stated.

Part 3: TECHNICAL DESCRIPTION:

3.1 General

3.1.1. Due to the importance and sensitivity of the equipment in this specification item, the Contractor shall ensure that grit / sand blasting operations are not carried out in the dry dock for the duration of this specification item.

3.1.2. The contractor shall obtain the services of the Wartsila/LIPS Field Service Rep to supervise the work specified in this specification. Allow $40,000.00 for the services of the representative and adjust the final cost by 1379 action.

3.1.3. The qualified service representative shall be in attendance at all times when this work is being carried out. The procedure listed below shall be used as a guideline only. Contractor and the service representative will co-ordinate activities to ensure the tail shaft is safely removed and installed on completion. Manuals for use of hydraulic tools are available from the Chief Engineer.

Tailshaft Weardown

3.1.4. Clearances at aft Starboard tail shaft bearings, shall be taken with feeler gauges at 90º intervals around shaft and recorded after the new shaft is installed with new sterntube bearings.

3.1.5. Clearances and poker gage readings shall be taken with the Chief Engineer's designate in attendance. Staging costs shall be included in Contractor's quotation.

3.1.6. Wear down of shaft bearings shall be determined by means of poker gages. Poker gages for measuring wear down are held onboard the ship and will be made available to the contractor.

3.1.7. Poker and feeler gauge readings shall be recorded with 3 typewritten copies passed to the Chief Engineer within three days.

Disassembly:

3.1.8. Ensure propeller pitch is left in full astern position for later disconnection of inner oil pipe.

3.1.9. Open by-pass valve on CPP system header tank to drain tank.

3.1.10. Contactor shall supply and install suitable welded lifting lugs on the ship's hull as required to carry out this work. Lifting eye pads located on the ship's hull <u>are not to be used.</u> On completion of all work, lifting lugs shall be air arc gouged off, areas to be ground smooth and painted as per underwater hull coating system.

Rope Guard

3.1.11. Starboard rope guard shall be removed in half sections and lowered to dock floor.

3.1.12. Contractor shall use air-gouging equipment to remove circumferential and butt welds to minimize damage to rope guard landing faces and damage to Thordon stern tube bushings. Contractor must install a fire blanket barrier inside the rope guard up against the aft end of the Thordon bushings to prevent slag from damaging the Thordon.

3.1.13. After rope guard has been removed, Contractor shall grind off weld slag and spatter debris on stern tube castings and rope guard landing faces.

3.1.14. Contractor shall quote on the supply and installation of 25 feet of stainless steel locking wire to replace missing or damaged lock wire on stern tube retaining bolts.

3.1.15. To install rope guard, use E 8018 –C1 electrodes and ensure preheat and interpass temperatures in the range of 140°C to 204°C can be maintained during the welding operations. Contractor shall ensure a 10 mm to 15 mm gap is kept between the propeller forward face and the rope guard aft edge. 12 mm continuous fillet welds to be used around rope guard circumference to shaft bracket casting. Butts shall be continuous weld.

3.1.16. Rope guard shall be grit blasted both sides and both sides painted as per painting specification for underwater hull. After installation, welded area paint shall be touched up.

Mud Room Deck Removal

3.1.17. The deck in the lower mud room above the Starboard sterntube seal shall be cut out to allow removal and installation of the shaft seal, SKF Coupling, and sterntube bushings. Contractor shall consult with TCMSB before removal takes place. The opening shall be as large as possible without disturbing deep frames and adjacent bulkheads.

Inner Shaft Seal

3.1.18. Contractor shall remove the Starboard stern tube inboard seals and inflatable tire and install new owner supplied seals and tire (GSM). The MA seal is a fully split face type seal. Wartsila service representative shall be in attendance at all times when this work is being carried out. The procedure listed below shall be used as a guideline only. Contractor and the service representative will co-ordinate activities to ensure correct installation of parts.

3.1.19. The stern tube seal is a Wartsila UK, 840 MOD 800 Type MA Seal. A manual for stern tube seal is available from the Chief Engineer.

3.1.20. Stern tube cooling water piping and seal cooling water piping shall be removed and stored as required.

3.1.21. The split liner on the tailshaft shall be removed and discarded. The new tailshaft has an extended shaft liner and the split liner for the seal is no longer required.

3.1.22. The seal assembly shall be completely overhauled using Service kits A, B, and C.

3.1.23. The Carrier ring is currently fitted with a rubber liner that is damaged. The rubber liner shall be replaced with a new composite liner as part of the modification. Coast Guard will supply the new composite liner assembly.

3.1.24. The face of the split seat shall be machined to remove roughness and grooving. The surface finish shall be as per manufactures recommended finish.

3.1.25. The bellows assembly shall be renewed and overhauled with new Coast Guard supplied parts.

3.1.26. The new shaft liner shall be drilled IWO drive clamp ring for alignment screws to be fitted. Four holes to be drilled Ø14mm x 10mm deep.

3.1.27. The seal assembly shall be fully assembled with the exception of the seat and drive ring and suspended in the shaft tunnel as the new shaft is been installed. The seat and drive ring will be assembled after the shaft is coupled.

Disassembly Cont'd

3.1.28. Area in way of the stern tube seal shall be cleaned of dirt, rust and debris before moving the shaft.

3.1.29. If required, ship staff will rotate shaft to allow for hydraulic connections can be made to SKF coupling. Sections of stern tube cooling water piping and shaft seal water piping may be removed and stowed by Contractor if required. Coast Guard (GSM) shall supply hydraulic pump unit for coupling removals.

3.1.30. To remove the MORGRIP bolts, shaft can be rotated and small port-a-pack jacks can be used with the strong-back to ease out the MORGRIP bolts. Flanges and MORGRIP bolts shall be marked as to their original locations and the bolts taken to the Contractor's machine shop for reference. The intermediate shaft flange bolt holes shall be dressed to remove scale and burrs. New MORGRIP bolts will be used with the new SKF coupling.

3.1.31. The SKF coupling shall be removed from the shaft tunnel and then the vessel for scrap. The new SKF coupling shall have the bolt hole bores measured and compared to the measurements of the intermediate shaft bolt hole bores. The bolt holes bores shall be reamed on either the coupling or the intermediate shaft to have matching bore measurements. Morgrip coupling bolts shall be identified, removed and stored in a safe location. New Coast Guard supplied MORGRIP bolts will be used for reassembly. The bolts shall be machined to final dimensions to suit the coupling and intermediate shaft bolt hole bores. Morgrip bolts shall be cleaned up, bolt diameters and borehole diameters measured and recorded. Three (3) typewritten copies of readings shall be given to Chief Engineer.

3.1.32. Tail shaft shall be pushed aft a distance of 320 mm using jacks at propeller hub.

3.1.33. Disconnect inner oil pipe, and store flange bolts.

3.1.34. Tailshaft shall be moved another 200 mm aft.

3.1.35. Shaft and coupling location shall be marked at aft end of coupling before pumping coupling off shaft. SKF coupling shall now be pumped off using SKF pump equipment. Contractor shall ensure during removal that coupling is properly supported and does not damage tapered area of shaft. Shaft and coupling tapered sections shall be thoroughly cleaned.

3.1.36. Tailshaft can now be withdrawn by Contractor using care and shall withdraw tailshaft and not damage the rubber coating between bronze liners. Forward end of the tail shaft will be required to be supported by a wood block during this procedure. Six hardwood saddles shall be fabricated to suit the radius of the shaft and stern tube. During removal Contractor shall use suitable rated nylon slings for moving and lifting of tailshaft. Also to note, ship does not have a hub lifting plate.

3.1.37. Tailshaft shall be fully supported on both bronze liners on Contractor supplied cradle and situated within a protected enclosure to allow for inspection of the rubber coating.

3.1.38. As the shaft is being replaced with a new shaft, the inner oil pipes shall be withdrawn from the shaft and laid aside on supported cradles to prevent bending. The pipes shall be covered with protective material to prevent ingress dirt, water etc. The old shaft shall be coated with a protective coating and wrapped to protect from corrosion and ingress of dirt. The shaft shall be removed from the dock bottom and laid aside on supported cradles until further direction from the owner on where the shaft is being delivered. The inner pipes shall be removed from the dock bottom and placed in the shipyard shop. The pipes shall be disassembled to replace the joint seals at all connections. The pipes shall be reassembled with new seals and flushed through a suitable filtering system with new oil.

3.1.39. The new SKF coupling shall be fitted to the new shaft while the shaft is in the contractors shop to ensure the drive up length is correct. The new SKF coupling shall be removed and transported to the vessel in the shaft tunnel.

3.1.40. The new shaft shall be lowered to the dock bottom and placed on supported cradles for preparations to be installed.

3.1.41. If grit blasting or painting operations are carried out while tailshaft is out of ship, Contractor shall supply and install protective covering over the tailshaft and ensure the stern tube is blanked off.

3.1.42. The forward and aft bronze tailshaft liner diameters of the new shaft shall be measured and recorded on Wartsila service sheets. The measurements shall be taken at four equal distance position over the length of each liner and measured in the Starboard/port and forward/aft directions. Three (3) type written copies shall be given to the Chief Engineer.

Sterntube Bushings:

3.1.43. The six stern tube bushings shall be replaced with new Wartsila UK bushings. Remove the outer compression ring and the inner connecting ring to allow access to the sterntube bushings. The inner connecting ring shall be lifted to the mud room and laid aside. The bushings shall be removed from the sterntube.

3.1.44. The existing bushing carriers shall be measured internally at several locations over the length, vertically and horizontally positions for the forward and aft carriers.

3.1.45. The new Wartsila bushings require an anti-rotation key to be fitted to each carrier over the entire length of each carrier. The length of the aft carrier is 3404mm and the forward carrier is 1500mm. Two drilling jigs shall be fabricated for drilling and tapping the securing bolts for the new keys. The key shall be fitted top dead center of the carriers and maintain an alignment within ±0.5mm forward and aft. New Coast Guard supplied keys shall be fitted and secured to the carriers.

3.1.46. From the carrier measurements and calculations, the new bushings OD shall be machined to final dimensions and installed in the sterntube bearing carriers. The ID of the new bushings shall be machined to final dimensions. Measurements from the tailshaft liners shall be used to determine the final ID of the bushings. The new bushings shall be installed by means of jacks, pressing plates and strong-backs. The contractor shall fabricate all necessary tools for the installation. Installation and machining of sterntube bushing shall be in accordance with procedures specified in the Manual DPM-01. Final inside diameter measurements shall be taken at four equal distance positions over the length of the forward and aft bushings and measured in the Starboard/starboard and forward/aft directions. Three type written copies shall be given to the Chief Engineer.

3.1.47. The forward and aft securing rings shall be reinstalled with new orings.

3.1.48. All parts and sealing surfaces shall be thoroughly cleaned before reassembly to ensure tight seals.

3.1.49. The circumferential area in the stern tube (approximately 5.6 m long x 0.92 m dia) between the forward and aft bushings shall be thoroughly grit blasted clean to remove loose scale, paint etc. and provide the required surface profile for the application of the Devcon ceramic. All debris shall be cleaned from stern tube. Before application of compound, all surfaces must be clean, dry and free of all contaminants including salt deposits.

3.1.50. The cleaned steel surfaces inside the stern tube shall be fresh water washed to remove salt deposits from the steel. Bare steel shall be thoroughly dried and wire brushed to clean of any flash rusting. Complete steel area shall be surface roughened by grit blasting to remove rust blisters and to increase the adhesion ability of the steel.

3.1.51. All holes and pitted areas larger than ¼" depth x ¼" dia shall be grit blasted to good metal. All prepared holes and pitted areas shall be filled with DEVCON CERAMIC PUTTY REPAIR (CFM). Contractor shall quote of supplying and applying 25 KG of putty material.

3.1.52. After the putty has cured, one coat of DEVCON BRUSHABLE CERAMIC WHITE shall be applied over the entire bare steel area. Before the White Ceramic has fully cured and following the DEVCON technical data sheet the entire circumferential area of the stern tube shall be coated with Brushable Ceramic Blue (Contrasting colour). Contractor shall quote on supplying and applying 50 KG of material.

3.1.53. Contractor shall apply all coatings as per the manufacturer's technical data sheets and supply sufficient ventilation and any heat required to allow for complete curing of coatings.

Assembly:

3.1.54. The new SKF coupling shall be lowered to the shaft tunnel and supported by nylon slings and wooden blocks.

3.1.55. The forward and aft stern tube bearings shall be lubricated with liquid soap (CFM), and applied sufficiently to provide lubrication during shaft installation. All tailshaft bearing surfaces shall be wiped completely clean of any dirt, sand etc. before tailshaft is installed. No grit blasting or painting operations shall be carried out until tail shaft installation is completed. Tapered end of tailshaft and SKF coupling bore shall be dressed to remove any rough material.

3.1.56. Tailshaft shall be installed in good order. Care shall be used to ensure shaft is correctly aligned with stern tube and shaft coating and stern tube bushings are not damaged during this operation. Wood block shall be used on forward end to guide shaft along stern tube. When shaft is close to entering forward bushing, a small jack is used to center the shaft. Care shall be taken not to damage ceramic coating.

3.1.57. The shaft can be pushed into the coupling leaving 700 mm to the intermediate shaft flange.

3.1.58. See installation of Sterntube Seal.

3.1.59. The coupling can now be pumped onto the old mark on the shaft. Pumping on should be done in increments of no more than 10 mm to avoid damage to the coupling seal. SKF coupling shall be moved up a total of 44.5 mm. Lubricate nut well with anti-seize. Screw on hand tight and put dowel pin in place.

3.1.60. Move shaft with coupling until 300 mm remains between intermediate shaft and coupling flange.

3.1.61. Connect inner oil pipe flanges using loctite on fasteners.

3.1.62. Push shaft into place, ensuring bolt holes are aligned. The bolt holes of the coupling and intermediate shaft shall be reamed to the same diameter and the new MORGRIP bolts shall be machined to suit the bolt hole size. Install MORGRIP bolts as per supplied instructions. Do not exceed maximum pressure on pump.

3.1.63. The shaft sleeve is now positioned and fastened. Maximum run out should be no more than 0.2 mm.

3.1.64. The shaft shall be rotated by ship's staff to position the vent & drain holes on the propeller hub to the 12 o'clock and 6 o'clock positions respectively.

3.1.65. The CPP system shall be filled with the appropriate oil. The propeller hub vent plug shall be removed. Header tank by pass valve shall be closed. One CPP pump is required with occasional activation of ahead and astern movement from the MCR. NOTE: LIPS service representative to ensure the blades are '0' (zero) pitched before undocking.

3.1.66. Ship's staff will assist in this operation, which takes 7 to 8 hours to complete. When oil has reached the top of the vent hole, the vent plug shall be installed.

3.1.67. System shall be bled of all air from within hub.

3.1.68. System pumps shall be run up and blades moved to ensure free operation.

3.1.69. All removed piping in shaft tunnel shall be installed and pressure tested.

3.1.70. See Starboard Rope Guard installation.

3.1.71. Contractor to include in cost the fitting and removal of any welded lugs required to carry out this work. On completion of this work and before dry dock is flooded, all lug welds shall be ground flush. The area of damaged coating shall be prepared and repaired with Intershield 163 Inerta 160. The coating preparation and application shall be applied as per International Coating specifications.

3.1.72. All tools provided by CCG shall be cleaned and returned to storage areas and secured under the supervision of Chief Engineer's designate.

3.1.73. The completed installation shall be functionally tested during sea trials.

3.2 Location

3.2.1. Shaft Tunnel Starboard Side

3.3 Interferences

3.3.1 Contractor is responsible for the identification of interference items, their temporary removal, storage and refitting to vessel.

Part 4: PROOF OF PERFORMANCE:

4.1 Inspection

4.1.1. All work shall be completed to the satisfaction of the Chief Engineer & ABS.

4.1.2. ABS shall inspect all disassembled parts.

4.2 Testing

Dock & Sea Trials.

4.3 Certification

N/A

Part 5: DELIVERABLES:

5.1 Drawings/Reports

5.1.1 Wartsila Canada shall provide a written report consisting of observations, defects, repairs, recommendations, and measurements to the Chief Engineer.

5.1.2 Contractor shall provide records of measurements in type written form to the Chief Engineer

5.2 SparesN/A

5.3 TrainingN/A

5.4 ManualsN/A

Spec item #: ED-05	**SPECIFICATION**	TCMSB Field #: N/A
Stbd Shafting System Alignment		

Part 1: SCOPE:

1.1 The intent of this specification shall be to check the alignment of the Starboard shaft system from the gearbox running aft.

1.2 This work shall be carried out in Conjunction with the following:
Starboard Tailshaft Replacement and Survey

Part 2: REFERENCES:

2.1 Guidance Drawings/Nameplate Data

2.1.1. Installation Alignment Main Engines & Gearboxes & Propulsion Shafting # 61-00-SK45
2.1.2. Propulsion Machinery HD Bolts & Chocks # 60-00-04
2.1.3. TFOX Tailshaft

2.2 Standards

2.2.1. The following Coast Guard Standards and or Technical Bulletins must be adhered to in the course of executing this specification. Copies of these standards and bulletins can be obtained from the CCG Technical Authority.
2.2.2. Canadian Coast Guard Fleet Safety Manual (DFO 5737)
2.2.3. Coast Guard ISM Confined Space Entry 7.D.9
2.2.4. Coast Guard ISM Hotwork procedures
2.2.5. Coast Guard ISM Fall Protection procedures
2.2.6. Canadian Coast Guard Welding Specifications for Ferrous Materials, Revision 4. (TP6151 E)
2.2.7. CWB CSA 47.1 latest revision Division I, II or III
2.2.8. SSPC-SPT

2.3 Regulations

2.3.1. TC Marine Machinery Regulations

2.4 Owner Furnished Equipment

2.4.1. The contractor shall supply all materials, equipment, and parts required to perform the specified work unless otherwise stated.

Part 3: TECHNICAL DESCRIPTION:

3.1 General

3.1.1. The following is Wartsila's General Process for Alignment, to be considered only estimations.

- Typically the team requires one day prior to the docking of a vessel.
- One day prior to the shaft dismantling for a reference measurement – hull deflection when compared to the pre docking measurement.
- One day for measurements of the intermediate shafting, to be left in place.
- One day for measurements with the tailshaft removed and free line of sight to the intermediate shaft aft coupling.
- New calculation for evaluation of current alignment.
- In-situ machining may be required.
- Depending on the findings, the repair process will be adapted to the requirements.
- After repair we need one day for the final set of measurements and installation of portable monitoring system.
- In total we would estimate approximately 10 days, but to be integrated in the docking schedule.

3.1.2. Contractor shall obtain the services of Wartsila Propulsion Alignment Specialist to perform the specified work. Contractor shall have an allowance of $50,000.00 for their services and adjusted by 1379 following proof of invoice. Allow 2 days to perform pre-drydocking alignment checks as reference. Allow 2 days prior to shaft dismantling for a reference measurement hull deflection when compared to pre-docking measurement. Allow 2 days for alignment checks while tailshaft is removed during drydock and a free line of sight to the intermediate shaft. Allow 10 days for the alignment and subsequent adjustments while the vessel is floated after drydocking. The contractor shall provide 3 workers to assist in the alignment procedures.

3.1.3. The contractor shall provide a separate quote for work described in this section of the specification item. This shall be used if the bearings have to be repositioned. If the bearings positions are to be adjusted the chockfast shall be removed and replaced with steel adjustable chocks (Vibro-chock). The bearing and structural seat shall be thoroughly cleaned to a flat surface, any proud areas shall be ground smooth. Contractor shall allow $15,000.00 for the purchase of 12 steel adjustable chocks (Vibro-chock) to suit the application, to be adjusted by 1379 following proof of invoice.

3.1.4. The final alignment procedure shall be completed while the vessel is afloat and following the drydocking portion of the refit.

3.1.5. The alignment check shall make use of strain gauges, load measuring gauges, displacement, and laser alignment equipment. The contractor may also use 3D scanning methods in conjunction with bearing load measuring methods.

3.1.6. The three shaft bearings shall be aligned as instructed by the Wartsila Alignment Specialists.

3.2 Location

3.2.1. Port side Shaft Tunnel

3.2.2. Port Side Aft Lower Auxiliary Machinery Compartment

3.2.3. Aft Main Engine Room

3.3 Interferences

3.3.1 Contractor is responsible for the identification of interference items, their temporary removal, storage and refitting to vessel.

Part 4: PROOF OF PERFORMANCE:

4.1 Inspection

4.1.1. All work shall be completed to the satisfaction of the Chief Engineer & ABS.

4.2 Testing

Dock Trial and Sea Trails

4.3 Certification

N/A

Part 5: DELIVERABLES:

5.1 Drawings/Reports

5.1.1 Provide copies of Wartsila service reports and alignment reading.

5.1.2 Provide copies of the main engine to gearbox alignment readings.

5.2 SparesN/A

5.3 TrainingN/A

5.4 ManualsN/A

Spec item #: ED-06	**SPECIFICATION**	TCMSB Field #: N/A
Stbd Propeller Survey		

Part 1: SCOPE:

1.1 The intent of this specification shall be to shall be to open the entire starboard propeller shaft system for inspection and maintenance. The vessel shall obtain a credit for the survey by ABS. The blades shall be replaced with spare CCG supplied propeller blades.

1.2 This work shall be carried out in Conjunction with the following:

- Starboard Tailshaft, Coupling, and Sterntube Bushing Replacement
- Underwater Hull Maintenance

Part 2: REFERENCES:

2.1 Guidance Drawings/Nameplate Data

2.1.1. LIPS Drwg #A006682

2.1.2. The WARTSILA / LIPS contact is:
Barry Broderick
Wartsila Canada, Mount Pearl, NL
LIPS dwg # A1-11582Prop.
Diameter: 4800 mm
Material: Cunial
Mass per blade: approx. 3,500 kg x 4 blades
Mass Propeller Hub: 23678 Kg

2.2 Standards

2.2.1. The following Coast Guard Standards and or Technical Bulletins must be adhered to in the course of executing this specification. Copies of these standards and bulletins can be obtained from the CCG Technical Authority.

2.2.2. Canadian Coast Guard Fleet Safety Manual (DFO 5737)

2.2.3. Coast Guard ISM Confined Space Entry 7.D.9

2.2.4. Coast Guard ISM Hotwork procedures

2.2.5. Coast Guard ISM Fall Protection procedures

2.2.6. Canadian Coast Guard Welding Specifications for Ferrous Materials, Revision 4. (TP6151 E)

2.2.7. CWB CSA 47.1 latest revision Division I, II or III

2.2.8. SSPC-SPT

2.2.9. (a) TP 127E-TC Marine Safety Electrical Standards.

2.2.10. (b) IEEE Standard 45 - Recommended Practice for Electrical Installation on Shipboard.

2.3 Regulations

2.3.1. Marine Machinery Regulations CSA

2.4 Owner Furnished Equipment

2.4.1. The contractor shall supply all materials, equipment, and parts required to perform the specified work unless otherwise stated.

Part 3: TECHNICAL DESCRIPTION:

3.1 General

3.1.1. Starboard propeller shall be disassembled for inspection.

3.1.2. The contractor shall allow $50,000.00 in its bid for the subcontracted services in addition to the cost of the contractor's own work.

3.1.3. The Coast Guard will be retaining the services of the Wartsila FSR for all of the work on this item which shall be carried out in accordance with the recommended manufacturer's instructions and under the direction of the WARTSILA / LIPS Field Service Representative

3.1.4. Coordination of related spec items shall be at the contractor's discretion, but contractor shall <u>note</u> requirement in, Shaft removal, for blade/hub position shall be at full astern to facilitate shaft removal.

3.1.5. Oil shall be drained from hub and disposed of by Contractor, approximately 1,200 liters of oil in hub assembly.

3.1.6. The procedures listed below are for guidance only since the LIPS Service Representative will determine the correct order for hub disassembly and later assembly.

3.1.7. Blades shall be removed at top dead center (12 o'clock position). Each blade has 9 retaining bolts, 5 forward, 4 aft. Blades bolts are tied together with stainless steel round bar spot welded to the bolt heads. There are 2 lifting points located at the root of each blade. The shaft must be rotated by ship's staff to bring each blade to the TDC position.

3.1.8. Contractor shall prepare & fit rigging (wire & nylon slings, shackles etc) for blade removal at suitable lifting points located over the propellers. Coast Guard will supply the blade lifting rig. Spot-welded stainless steel round bar shall be carefully cut off at welds using a grinder. Contractor shall renew SS round bars.

3.1.9. The Hytorc Tool for Propeller Bolts will be provided by the ship, vice as written.

3.1.10. The pre-tensioned blade bolts shall be released under the direction of the LIPS service representative using ship supplied HY-TORC equipment. Bolt release HY-TORC pressures shall be recorded. Bolts shall be marked before withdrawal. Each blade shall be marked to return to original location on hub. Blade bolts shall be moved to a safe location for stowage, ensuring threads are suitably protected.

3.1.11. Fit lifting eyes to blade and connect to rigging such that blade is lifted evenly from hub. Extra care must be taken to ensure there is no damage to the blade housing on the hub assembly. Removed blade shall be moved to a suitably clean and sheltered area so that the blade is protected from any possible damage. Repeat for remaining 3 blades.

3.1.12. The contractor shall allow $20,000 in its bid for the subcontracted services of blade repair. The Contractor shall include the shipping costs in the cost of its own work.

3.1.13. The Contractor shall arrange for a blade repair specialist to carry out the following work on all four of the port blades. Blades shall be sent to contractor's facility. Edges shall be dressed and cleaned and the blades measured. All porous areas shall be cleaned and filled with Devcon Bronze Putty and refinished smooth. Blades shall be balanced. Type written copy of the blade repair shall be given to the Chief Engineer.

3.1.14. Hub cover shall be removed. The propeller hub shall be removed and transported to the shop for disassembly.

3.1.15. Sliding piston yoke and blade carriers shall be removed. Due care and attention shall be taken with disconnection of internal piping from yoke. Emergency piston shall be removed from tailshaft and shall be cleaned and inspected.

3.1.16. All parts shall be inspected. Sliding blocks, yoke pins and blade carrier slots shall all be measured and sliding block clearances determined.

3.1.17. Open hub and all associated components shall be adequately wrapped and protected while disassembled. Contractor shall be responsible for ensuring that no foreign material of any sort accesses hub internals.

3.1.18. The hub shall be measured in areas directed by the FSR.

3.1.19. The hub assembly shall be reassembled with new, owner supplied (GSM) seals, Inner pipe shall be reconnected to yoke.

3.1.20. The 4 propeller blades shall be fitted with new CCG (GSM) supplied o-rings and shall be reinstalled. All blade surfaces shall be thoroughly cleaned of all dirt or debris.

3.1.21. Before lifting each marked blade to the appropriate location, the blade flange and mating surfaces shall be checked for any damage. Apply grease as required.

3.1.22. Lower each blade into position taking extra care to avoid damage to the sealing and mating surfaces. Prior to the final lowering of the blade, ensure the hub assembly is completely free of dirt etc.

3.1.23. Position the blade over the hub blade housing and line up vertically and laterally. Line up the blade retaining bolt holes on the blade with the corresponding holes in the hub.

3.1.24. Lower the blade in place until the locating pins in the hub assembly have engaged in holes in the blade flange. As soon as the blade flange is engaged in the hub assembly, fit 2 bolts: one on the forward side, one on the aft side and engage threads. This will ensure the blade is in the correct position.

3.1.25. Lower the blade all the way down to the final position and screw down on the 2 bolts by hand. Fit all the remaining bolts and hand tighten.

3.1.26. Position and fit the hydraulic HY-TORC pump and sockets. Tighten bolts as per LIPS specifications and in rotation as required. Shaft shall be rotated to fit the 3 remaining blades in original locations.

3.1.27. Upon completion of the bolt and blade installation, Contractor shall spot weld in place stainless steel locking bar as per original installation.

3.1.28. Hub shall be refilled with approx 1,200 liters of Harmony AW 68 (CFM). All hub plugs shall be reinstalled and locked in position.

3.1.29. Contractor shall supply the material and fabricate four (4) naval bronze plugs as per supplied sample. Plugs shall be installed where missing in the lifting eye hole on the forward side of the blades one bronze plug each complete with neoprene gasket of suitable thickness. Loctite PST 565-31 shall be used on the threads. Contractor shall quote on the installation of one plug. The exact number required will be determined when the vessel is docked and will be adjusted by 1379 action.

3.1.30. All work shall be completed to the satisfaction of the Chief Engineer and ABS Surveyor.

3.2 Location

3.2.1. N/A

3.3 Interferences

3.3.1 Contractor is responsible for the identification of interference items, their temporary removal, storage and refitting to vessel.

Part 4: PROOF OF PERFORMANCE:

4.1 Inspection

4.1.1. All work shall be completed to the satisfaction of the Chief Engineer, Wartsila Field Service Rep, and ABS Inspector.

4.2 Testing

Drydock, Dock Trials & Sea Trials.

4.3 Certification

N/A

Part 5: DELIVERABLES:

5.1 Drawings/Reports

5.1.1 Provide copies of Wartsila service reports.

5.2 Spares

N/A

5.3 Training

N/A

5.4 Manuals

N/A

Spec item #: L-01	**SPECIFICATION**	TCMSB Field #: N/A
Removal and Installation of Navigation Radars		

Part 1: SCOPE:

1.1. The intent of this specification is to outline the removals of the existing Bridgemaster radars and the installation of new FURUNO FAR 3000 Generation Radars.

2. Part 2: References.

2.1. Guidance Documents

2.1.1. Allswater Drawing No. 19131-410-A-045, Rev. 0, Centerline and Starboard Radar Installation Arrangement.
2.1.2. Allswater Drawing No. 19131-410-A-046, Rev. 0, Aft Facing Radar Installation Arrangement
2.1.3. FURUNO Drawing No. C3616-G02-D, RSB-128 Antenna Unit Outline Drawing.
2.1.4. FURUNO Drawing No. C3624-G03-F, RSB-130 Antenna Unit Outline Drawing.
2.1.5. FURUNO Drawing No. C3625-G01-C, RSB-131 Antenna Unit Outline Drawing.
2.1.6. FURUNO Installation Manual Chart Radar Model FAR-3210(-BB)/3220(-BB)/3310/3320
2.1.7. FURUNO Installation Manual Chart Radar Model FAR-3320W/ 3220W-BB/3330SW/3230SW-BB
2.1.8. FURUNO Installation Handbook (Edition 2) – Note: this document provides general information for many different types of FURUNO products, but includes sections with details that are relevant for work with radars, and specifically with radar waveguide.

2.2. Owner Furnished Equipment Supplied

2.2.1. All materials, equipment, and parts required to perform the specified work are Owner supplied unless otherwise noted.

3. Part 3: TECHNICAL DESCRIPTION:

3.1. General

3.1.1. Prior to commencement of the work the Contractor must inform the Chief Engineer.

3.1.2. All work for the removal and installation of the existing radars must be performed on the centerline and starboard masts located above the wheelhouse top platform.

3.1.3. The Contractor must ensure, with the help of the Chief Engineer, that all electrical systems for the radars and any other affected systems, have been locked out and tagged out before commencement of any work.

3.1.4. The Contractor must ensure all work areas are neat and tidy at the end of the work day to ensure a safe environment.

3.1.5. The Contractor must remove all sharp edges and grind all burrs smooth.

3.1.6. The Contractor must repaint damaged areas as per client specs. 1 coat of primer and 2 finish coats as per existing.

3.1.7. All welding must be completed to CWB's latest revision, or an equivalent standard accepted by the attending surveyor.

3.1.8. The Contractor must store all materials as instructed by the Chief Engineer.

3.1.9. The Contractor must ensure that the surrounding area is properly cleaned to ensure the area is safe prior to any hot work.

3.1.10. The Contractor must ensure all new and existing electrical penetrations are properly prepared and cleaned prior to hot work.

3.1.11. The Contractor must ensure all new and existing electrical wires affected in this modification must be properly supported in accordance with accepted / approved practices.

3.1.12. Electrical penetrations through frames or brackets must be in accordance with accepted / approved practices.

3.1.13. All Existing, unused electrical penetrations must be closed in accordance with accepted / approved practices.

3.1.14. The Contractor must clean up all debris (including all old cabling that is removed) and dispose of it as per Provincial Regulations at their own expense.

3.1.15. The Contractor must paint new steel as per client specification before installation. 1 coat of primer and 2 finish coats as per existing.

3.1.16. The Contractor must coat all new and disturbed areas on the Wheelhouse Top platform, wheel house top and centerline and starboard masts.

3.1.17. The Contractor must ensure all electrical disconnections are labelled, stowed and protected.

3.1.18. The Contractor must provide and install all temporary staging, lifting appliances and rigging.

3.1.19. The Contractor must ensure that Provincial Regulations are met with regard to all required training for workers including, but not necessarily limited to, fall arrest training/certification.

3.2. Removal of Existing Radars

3.2.1. The Contractor must electrically disconnect the two (2) existing radars located on the centerline and starboard side of the wheelhouse top platform from the source.

3.2.2. The Contractor must disconnect the elliptical waveguide from the existing X-Band radar at the point of its connection to the radar turning unit located on starboard side of wheelhouse top aft.

3.2.3. The Contractor must remove and dispose of, as per the Chief Engineers instructions, the wave guide from the X-Band radar to the transceiver in the AC hut. Particular care must be taken when removing the waveguide as the existing supports and penetration must remain for new waveguide routing.

3.2.4. The Contractor must disconnect the coaxial waveguide from the existing S-Band radar at the point of its connection to the radar turning unit located on at the centerline of the wheelhouse top.

3.2.5. The Contractor must remove and dispose of, as per the Chief Engineers instructions, the cable from the S-Band radar to the transceiver in the AC hut. Particular care must be taken when removing the waveguide on as the existing supports must remain for new wire routing.

3.2.6. The Contractor must remove and store any miscellaneous items which may be in the way of equipment during the removal or installation phases.

3.2.7. The Contractor must unbolt, remove and dispose of, as per the Chief Engineer's instructions, the two (2) radars from the existing pedestals as outlined in Ref. 2.1.1.

3.2.8. The Contractor must remove the existing top plates and support brackets of the two (2) existing radars on the centerline and starboard side of the wheelhouse top platform.

3.2.9. The Contractor must uninstall, remove and dispose of, as per the Chief Engineer's instructions, any existing power and signal wires connecting the radars to the power supply located in the AC hut. The electrical penetrations and transits must remain and be used for the installation of any new power and signal wires unless new penetrations are specified in ref. 2.1.1.

3.2.10. The Contractor must remove and grind flush any obsolete or miscellaneous steel brackets or other material to ensure a clean surface to weld new mounting plate and brackets.

3.3. Installation of New FURUNO FAR 3000 Radars on Centerline and Starboard Side

3.3.1. The Contractor must seal obsolete deck and bulkhead penetrations with a similar plate thickness and area must be painted as per client specs. 1 coat of primer and 2 finish coats as per existing.

3.3.2. The Contractor must test and confirm there is no clashes with the radar arm and any surrounding supports or structures prior to the installation.

3.3.3. The contractor must install the new top plate and brackets for the new XBand radar on the existing starboard mast pole on the wheelhouse top platform as per ref. 2.1.1, ensuring the dimensions of the new plate matches the footprint of the new radars. The Contractor must supply, prepare and align the new radar top plates and brackets on top of the existing pole and tack weld into place ensuring proper alignment as per ref. 2.1.1. Once placement of the foundation is approved by the Chief Engineer the contractor must weld the plate in place.

3.3.4. The contractor must install the new top plate and brackets for the new SBand radar on the existing centerline mast pole on the wheelhouse top platform as per ref. 2.1.1, ensuring the dimensions of the new plate matches the footprint of the new radars. The Contractor must supply, prepare and align the new radar top plates and brackets on top of the existing pole and tack weld into place ensuring proper alignment as per ref. 2.1.1. Once placement of the foundation is approved by the Chief Engineer the contractor must weld the plate in place.

3.3.5. The Contractor must prepare the new penetration insert plate and cut the new hole for the insert plate. The Contractor must remove the old penetrations and install the new insert plate for the new wire cable of the S-Band radar as per ref. 2.1.1. The Contractor must install the new SBand cables through the new cable transits that connect to the new SBand radar.

3.3.6. The Contractor must install the owner supplied elliptical EW85 waveguide from the AC hut to the new X-Band radar on the starboard side of the wheelhouse top platform aft. The new waveguide must be routed as per the old, using the existing supports used by the old waveguide. The contractor must secure the waveguide to the supports using the client supplied mounting hardware. Care must be taken to observe the directions and methods indicated in reference 2.1.6 and/or the specific directions provided with the new pieces of waveguide. All bend radii must meet manufacturer's specifications.

3.3.7. The Contractor must install the owner supplied coaxial AVA5-50 cable from the AC hut to the S-Band new radar located on the centerline of the wheelhouse top platform. The new coaxial cable must be routed as per the old, using the existing supports used by the old cable. The contractor must secure the coaxial cable to the supports using the client supplied mounting hardware. Care must be taken to observe the directions and methods indicated in reference 2.1.7 and/or the specific directions provided with the new pieces of coaxial cable. All bend radii must meet manufacturer's specifications.

3.3.8. The Contractor must install the new owner supplied power and signal cable connecting the power supply and radar monitor located in the AC hut and ensure that the existing electrical penetrations and transits are used. The contractor must ensure that the electrical installation meets the manufacturer's specification and that the minimum cable bend radii outlined in ref. 2.1.4, and 2.1.5 are respected. The contractor must ensure new electrical terminations are similar to existing electrical infrastructure on the ship.

3.3.9. Once all new cable and waveguide is in place, is properly supported and approved by the Chief Engineer the Contractor must do the final tightening of any bolts, rote transits and deck penetration boot assemblies.

3.3.10. The Contractor must install and bolt the two (2) new radars on their foundations following the bolting installation steps outlined in ref. 2.1.6, and 2.1.7. Once the Chief Engineer has provided approval of the position and arrangement of the new radars the contractor can bolt the radars into place, ensuring the nuts are torqued to manufacturer's specifications.

3.3.11. The Contractor must connect and bolt the ground wire to the ground terminal on each radar and then to a grounding point located as close as possible to the antenna unit meeting the grounding point installation and details as per ref. 2.1.6 and 2.1.7. Once the Chief Engineer has provided approval of the grounding terminals grounding points for each unit the contractor must coat the ground terminals, grounding points and mounting bolts in approved marine sealant.

3.3.12. The Contractor must re-install any miscellaneous items which may have been removed during the removal or installation phases.

3.3.13. The Contractor must repaint all bare metal as per owner`s specification. 1 coat of primer and 2 finish coats as per existing.

3.3.14. Upon completion, the installation must not be considered complete, until the units have been tested, and considered operating as per the manufacturers specifications, to the satisfaction of the Chief Engineer, Class and/or Flag and FURUNO, as applicable.

3.4. Installation of new FURUNO X-Band RSB-128 XN12CF Aft Facing Radar

3.4.1. The Contractor must fabricate and install the new support structure, header beams and foundation pads for the new RSB-128 XN12CF aft facing radar as per Ref. 2.1.2. The Contractor must ensure the new headers align properly with the new radar support legs. The Contractor must remove insulation IWO the new headers and store.

3.4.2. The Contractor must fabricate and install the new mounting plate and brackets on the new RSB-128 XN12CF aft facing radar support structure as per Ref. 2.1.2.

3.4.3. The Contractor must align the new radar top plates and brackets and tack weld into place ensuring proper alignment as per ref. 2.1.2. Once placement of the foundation is approved by the Chief Engineer the contractor must weld the plate and brackets in place.

3.4.4. The Contractor must install the new cable transit as per Ref. 2.1.2.

3.4.5. The Contractor must install the new owner supplied power/signal and sub monitor cabling between the power supply and radar monitor located in the wheelhouse. The contractor must ensure that the electrical installation meets the manufacturer’s specification and that the minimum cable bend radii outlined in ref. 2.1.3 are respected. The contractor must ensure new electrical terminations are similar to existing electrical infrastructure on the ship.

3.4.6. Once all new cables are routed and properly supported and approved by the Chief Engineer the Contractor must do the final tightening of any bolts and rote transits.

3.4.7. The Contractor must install and bolt the new RSB-128 XN12CF aft facing radar in place. Once the Chief Engineer has provided approval of the position and arrangement of the new radars the contractor can bolt the radars into place, ensuring the nuts are torqued to manufacturer's specifications.

3.4.8. The Contractor must connect and bolt the ground wire to the ground terminal on each radar and then to a grounding point located as close as possible to the antenna unit meeting the grounding point installation and details as per ref. 2.1.6 and 2.1.7. Once the Chief Engineer has provided approval of the grounding terminals grounding points for each unit the contractor must coat the ground terminals, grounding points and mounting bolts in approved marine sealant.

3.4.9. The Contractor must re-install any miscellaneous items which may have been removed during the removal or installation phases.

3.4.10. The Contractor must repaint all bare metal as per owner`s specification. 1 coat of primer and 2 finish coats as per existing.

3.4.11. Upon completion, the installation must not be considered complete, until the units have been tested, and considered operating as per the manufacturers specifications, to the satisfaction of the Chief Engineer, Class and/or Flag and FURUNO, as applicable.

3.5. Installation of new Centerline and Starboard Mast Support Posts

3.5.1. The Contractor must fabricate and install the new mast support posts and landing pads for the starboard mast pole, X-Band Radar, as per Ref. 2.1.2. The Contractor must ensure all pads align with the existing structure below.

3.5.2. The Contractor must fabricated and install the new mast support posts for the centerline mast, S-Band Radar, as per Ref. 2.1.2. The Contractor must remove all cabling on the existing piping on the wheelhouse top, as applicable, and replace once the new support posts have been installed.

3.5.3. The Contractor must re-install any miscellaneous items which may have been removed during the removal or installation phases.

3.5.4. The Contractor must repaint all bare metal as per owner`s specification. 1 coat of primer and 2 finish coats as per existing.

3.6. Interferences

3.6.1. Contractor is responsible for the identification of interference items, their temporary removal, storage protection, and refitting to vessel.

Part 4: PROOF OF PERFORMANCE:

4.1. Inspection

4.1.1. All work to be completed to satisfaction of the Chief Engineer, Class/Flag and FURUNO, as applicable.
4.1.2. Visual inspection of all welding 100%.
4.1.3. Welds 10% MPI testing completed by approved testing personnel.
4.1.4. The Contractor is responsible for all air quality testing to ensure hot work and entry is permitted.
4.1.5. The Contractor must issue and post hot work permits and must maintain a fire watch.
4.1.6. Area where work was carried out to be inspected to ensure all debris (piping, etc.) has been removed.

4.2. Testing

4.2.1. Welding 100% visual by Class/Flag and Chief Engineer.
4.2.2. Welds to 10% MPI by approved testing personnel
4.2.3. Areas where hot work is to be carried out are to be certified by a Chemist or a qualified person to be determined by Chief Engineer.
4.2.4. The new radar must have its functionality demonstrated to the satisfaction of the Chief Engineer.
4.2.5. Signal transmission through newly-installed waveguide must be confirmed through function testing with the newly-installed radar.

4.3. Certification

4.3.1. Welders must be CWB Certified
4.3.2. Chemist must be Certified
4.3.3. Technicians for NDT testing must be Certified
4.3.4. Workers working aloft must be Fall Arrest Certified.

Part: 5 DELIVERABLES:

5.1 Drawings/Reports

5.1.1 Contractor must provide the Technical Authority with a report of the contractors work in both electronic and hardcopy formats outlining the details of the inspections and any alterations/repairs prior to the acceptance of this item.

Spec item #: L-02	**SPECIFICATION**	TCMSB Field #: N/A
RADAR / ECDIS UPGRADE		

Part: 1 SCOPE:

1.1 The intention of this specification is for the removal of the existing Dual Bridge Master E Radar Systems and upgrade to the new owner supplied FURUNO FAR-3000 Series Radar System and FURUNO FMD-3000 Series Electronic Chart Display and Information System (ECDIS).

1.2 Contractor must supply all materials, and parts required to perform the specified work unless otherwise stated.

1.3 Contractor must complete all work as specified within this specification within 20 working days from the refit start date as provided by Contracting Authority. This will allow the CCG Technical Representatives, FSR's, and Classifications Society time to complete terminations and complete inspections prior to vessel returning to operation and onto its scheduled programs.

Part: 2 REFERENCES:

2.1 Reference Documentation and Drawings

Drawing Number	Description	Electronic Number
MM692-032-WD	CCGS Terry Fox Bridge Master E Radar System Wiring Diagrams	
15-00-126	CCGS Terry Fox Nav. Bridge Layout Radar/ECDIS Project	
Preliminary	CCGS Ann Harvey FURUNO FAR/FMD 3000 Series RADAR/ECDIS Type 1 Configuration Wiring Diagram	
68806001	CCGS Terry Fox Console Adapter Base	
19131-410-SPC-045	CCGS Terry Fox R-1 Removal and Installation of Navigational Radars Specification Allswater Marine Consultants Ltd.	
19131-410-A-045	CCGS Terry Fox	

	Centreline and Starboard Radar Installation Arrangement Drawings Allswater Marine Consultants Ltd.	
19131-410-A-046	CCGS Terry Fox Aft Facing Radar Installation Drawings Allswater Marine Consultants Ltd.	
IME-36160-C2 Rev. C2	FURUNO FAR-3210(-BB)/3220(-BB)/3310/3320 CHART RADAR Installation Manual	
IME-36240-C3 Rev. C3	FURUNO FAR-3320W/3220W-BB/3330SW/3230SW-BB CHART RADAR Installation Manual	
IME-44730-E Rev. E	FURUNO FMD-3200/3200-BB/3300 ECDIS Installation Manual	
C3616-G02-D	FURUNO X-Band Antenna Unit RSB-128 Outline Drawing (Aft Looking Radar Turning Unit)	
C3624-G03-F	FURUNO X-Band Antenna Unit RSB-130 Outline Drawing (X-Band Turing Unit)	
C3625-G01-C	FURUNO S-Band Antenna Unit RSB-131 Outline Drawing (S-Band Turning Unit)	

2.2 Standards

2.2.1 Fleet Safety and Security Manual (DFO/5737)
2.2.2 TP127E – Ships Electrical Standards
2.2.3 IEEE 45:2002 – Recommended Practice for Electrical Installations on Ships
2.2.4 Specification for the Installation of Shipboard Electronic Equipment (70-000-000-EU-JA-001)
2.2.5 General Information for the Rules and Regulations for the Classification of Ships.

2.3 Regulations

2.3.1 Canada Shipping Act, 2001

Part: 3 TECHNICAL DESCRIPTION

3.1 General

3.1.1 The contractor must supply all equipment, enclosures, ventilation, staging, scaffolding, chain falls, carnage, crane, slings, and shackles necessary to perform the work. All lifting equipment must be appropriate for the expected duties, and be accompanied by current certification indicating, or be permanently marked as to being, or a safe working load for the expected duties. Any brackets, mounts, or any other welded attachments required in the performance of this specification must be welded into place by certified welders.

3.1.2 Prior to any hot work taking place, the contractor must ensure that the area of work and all equipment must have be sufficiently protected from any sparks or metal filings.

3.1.3 In addition to any hot work taking place, which includes grinding and welding, the Contractor must check the vessels lead abatement documents and follow proper lead abatement procedures. If any area is of any concern, if will be brought to the attention of the Chief Engineer and a lead abatement will be conducted.

3.1.4 For the purpose of adjustments, the Contractor must provide a unit cost for the testing of lead. Any lead testing will be covered by a 1379.

3.1.5 Contractor must ensure that all areas have been cleaned and free of any debris resulting from the performance of this specification item.

3.1.6 Contractor must be responsible for the temporary removal and reinstallation of any deck heads, bulkheads, paneling, insulation, and any items that is deemed to be interfering to the running of any cables and mounting of any equipment.

3.1.7 The contractor must follow existing cable trays throughout the vessel where fitted for all cable installation. Once installed, all cabling must be secured as per TP127. Contractor must re-use existing cable penetrations and repack with classification society approved products. Any cable penetrations that are deemed not reusable by the contractor will be replaced and installed with new glands and dealt with by a 1379. Contractor must supply and install all required materials.

3.1.8 All cabling, once installed, the contractor must identify each cable with a marked stamped stainless steel metal tag. The labels are to be securely affixed to the cable at each end and through any deck, deck heads, and gland penetrations with the designation for each cable as provided in this specification.

3.1.9 Contractor must provide a unit cost for the supply and install of a new classification society approved ROXTEC R125 AISI 316 transit complete with blocks and suitable piping. If there is the requirement for any new transits that are not listed within this specification they will be dealt with by a 1379.

3.1.10 Contractor must provide a unit cost for the supply and installation of ten (10) meters (m) of cable listed within this specification.

3.1.11 The contractor must dispose of all cables that have been identified for removal below and in the reference drawings at their own expense.

3.1.12 Contractor must repack all glands and transits that will be reused as per this specification and the method must meet or exceed TCMS or classification society requirements.

3.1.13 Contractor must relabel and update all electrical supply feeds on electrical panels within this specification.

3.1.14 Prior to the commencement of any electrical work, the contractor must ensure that all electrical supplies feeding the systems have been isolated at the source following an established lockout/tag out procedure.

3.1.15 Electrical isolations for AC power are as follows.

3.1.15.1 EP-101-1 S-Band Radar Nav. Bridge Port Wing Aft
3.1.15.2 EP-101-2 X-Band Radar Nav. Bridge Port Wing Aft
3.1.15.3 EP-101-4 S-Band Radar Scanner Nav. Bridge Port Wing Aft
3.1.15.4 TEP-101-10 ECPINS (ECS) Console Nav. Bridge Aft Starboard

3.1.16 Upon final installation, testing must be carried out as per Section 4.2 of this specification item.

3.1.17 All electronic equipment and components removed from the vessel resulting from the performance of this specification must be safely stored and returned to the owner as these components must be used to service similar systems on CCG vessels.

3.1.18 Contractor must work in conjunction with a Coast Guard Electronic Technician to oversee the installation of the new systems to ensure compliance with applicable Coast Guard standards. Terminations of all equipment must be completed by CCG technicians except all AC/DC power.

3.1.19 Contractor must refer to Specification 19131-410-SPC-045 R-1 Removal and Installation of Navigation Radars and Drawing Numbers 19131-410-A-045 and 19131-410-A-046 for the removal of the old radar turning units, for the modifications to the radar pedestals, and for the installation of the new radar turning units.

3.1.20 Contractor must disconnect and remove all of the existing equipment and cabling associated within the systems as detailed in reference drawings and equipment accompanied in the tables below. It would be recommended to start the cable removal from the equipment side to eliminate any discrepancies within the applicable drawings. Reference pictures below.

3.1.21 Equipment Removal

Equipment	Location
X-Band Radar Console (Display B) complete with: • Processor • Display • Control Panel • Serial Interface Unit • VDR Remote Video Unit • 4 Channel Video Splitter • AC Isolation Switch • Data Junction Box • Wooden base • Winter Mode Switch • VGA/Ethernet Converter • Power Bar	Nav. Bridge Forward Port Side
S-Band Radar Console (Display A) complete with: • Processor • Display • Control Panel • Isolation Switch • Scanner Control Unit • Serial Interface Unit • Wooden base • Single AC Outlet • Winter Mode Switch • 2 Channel Video Splitter • VGA/Ethernet Converter	Nav. Bridge Center Port
X-Band Transceiver	Wheelhouse Top A/C Hut Aft Bulkhead (Starboard)
S-Band Transceiver	Wheelhouse Top A/C Hut Aft Bulkhead (Port)
Radar Inter-Switch	Wheelhouse Top A/C Hut

	Aft Bulkhead
S-Band Scanner Safety Switch	Wheelhouse Top Top of A/C Hut on Centerline
S-Band Turning Unit & Antenna	Wheelhouse Top Top of A/C Hut on Centerline
X-Band Scanner Safety Switch	Wheelhouse Top Top of A/C Hut on Starboard Side
X-Band Turning Unit & Antenna	Wheelhouse Top Top of A/C Hut on Starboard Side
ECPINS Console (Blue) Complete with: • ECS PC • UPS • VGA Splitter • AC Outlet • USB Serial Hub • Power bars (x2) • 12 VDC Power Supply • SmartNav Speed Log Converter • NavMux • NavGyro • DD20 Data Distribution for Gyro • Terminal Block and panel • Wooden base	Nav. Bridge Center Port
Display Compatibility Unit (DCU)	Nav. Bridge Crawl Space Starboard Aft
AFT Radar Remote Station Complete with: • 19” Monitor • Video Selector Switch • Monitor Mount	Nav. Bridge Aft Console Port
Wooden Console Complete with: • 19” Monitors (x2) • UPS • Video Selector Switch • Keyboards and mice • KA7230 Module • Cabling	Nav. Bridge Forward Starboard
Wooden Console Complete with: • 19” Monitor • Keyboard and mouse	Nav. Bridge Forward Port

• KA7230 Module • Cabling	

Pictures: X-Band Radar Console (Display B) and Associated Equipment

Pictures: S-Band Radar Console (Display A) and Associated Equipment

Pictures: Radar Transceivers (X & S-Band) and Radar Inter-Switch

Pictures: ECPINS Console (Blue)

Pictures: Wooden Console Nav. Bridge Forward Starboard

Pictures: Wooden Console Nav. Bridge Forward Port

Pictures: Aft Radar Remote Station

3.1.22 The Contractor must disconnect and remove all associated cabling listed below in Cable Removal List and within the reference drawings listed.

3.1.23 Cable Removal List

Cable Number Type Label	From	To
X-Band Radar Console (Display B)		
B205 RDR-DB-AC	Nav. Bridge Forward Port X-Band Radar Console	Nav. Bridge Forward port X-Band Radar Console
B184 RDR-TB-AC	Nav. Bridge Forward Port X-Band Radar Console	Wheelhouse Top A/C Hut Aft Bulkhead X-Band Transceiver
RDR WMOD-B	Nav. Bridge Forward Port X-Band Radar Console	Wheelhouse Top A/C Hut Aft Bulkhead X-Band Transceiver
B212 RDR-DB-TRIG	Nav. Bridge Forward Port X-Band Radar Console	Wheelhouse Top A/C Hut Aft Bulkhead Radar Inter-Switch
B211 RDR-DB-VID	Nav. Bridge Forward Port X-Band Radar Console	Wheelhouse Top A/C Hut Aft Bulkhead Radar Inter-Switch
B213 RDR-DB-ISW1	Nav. Bridge Forward Port X-Band Radar Console	Wheelhouse Top A/C Hut Aft Bulkhead Radar Inter-Switch
B214 RDR-DB-ISW2	Nav. Bridge Forward Port X-Band Radar Console	Wheelhouse Top A/C Hut Aft Bulkhead Radar Inter-Switch
G-23 Gyro Feed	Nav. Bridge Forward Port X-Band Radar Console Data Junction Box	"B" Deck Electronics Equipment Room Gyro Compass
RDR-DB-GYRO	Nav. Bridge Forward Port X-Band Radar Console Data Junction Box	Nav. Bridge Forward Port X-Band Radar Console Radar Processor
RDR-DB-GPS	Nav. Bridge Forward Port X-Band Radar Console Radar Processor	Nav. Bridge Aft GPS Distribution Junction Box
DL-10	Nav. Bridge Forward Port X-Band Radar Console Data Junction Box	"B" Deck Electronics Equipment Room Speed Log Electronics Unit
RDR-DB-LOG	Nav. Bridge Forward Port X-Band Radar Console Data Junction Box	Nav. Bridge Forward Port X-Band Radar Console Radar Processor
RDR-DB-ARPA- MID-ECS	Nav. Bridge Forward Port X-Band Radar Console	Nav. Bridge Center ECS Console (GMDSS)

	Serial Interface Unit	
RDR-DB-ARPA-PORT-ECS	Nav. Bridge Forward Port X-Band Radar Console Serial Interface Unit	Nav. Bridge Center Port ECS (ECPINS) Console (Blue)
IMIC3-ARPA-X	Nav. Bridge Forward Port X-Band Radar Console Serial Interface Unit	Nav. Bridge Aft Starboard IMIC3 Workstation Desk
Cat5e Cable (AFT-X)	Nav. Bridge Forward Port X-Band Radar Console	Nav. Bridge Aft Console Radar Remote Monitor
Video (VGA) Cable (X-STBD ICENAV)	Nav. Bridge Forward Port X-Band Radar Console	Nav. Bridge Aft Starboard Bulkhead
B206 RDR-SB- BEARING	Wheelhouse Top A/C Hut Aft Bulkhead X-Band Transceiver	Wheelhouse Top Top of A/C Hut Starboard X-Band Turning Unit
B207 RDR-SB-PMTRIG	Wheelhouse Top A/C Hut Aft Bulkhead X-Band Transceiver	Wheelhouse Top Top of A/C Hut Starboard X-Band Turning Unit
B208 RDR-SB-MOTOR	Wheelhouse Top A/C Hut Aft Bulkhead X-Band Transceiver	Wheelhouse Top Top of A/C Hut Starboard X-Band Safety Switch
B208 RDR-SB-MOTOR	Wheelhouse Top Top of A/C Hut Starboard X-Band Safety Switch	Wheelhouse Top Top of A/C Hut Starboard X-Band Turning Unit
B209 RDR-SB- TUENABLE	Wheelhouse Top A/C Hut Aft Bulkhead X-Band Transceiver	Wheelhouse Top Top of A/C Hut Starboard X-Band Turning Unit
B225 RDR-TB-VID	Wheelhouse Top A/C Hut Aft Bulkhead X-Band Transceiver	Wheelhouse Top A/C Hut Aft Bulkhead Radar Inter-Switch
B226 RDR-TB-ISW	Wheelhouse Top A/C Hut Aft Bulkhead X-Band Transceiver	Wheelhouse Top A/C Hut Aft Bulkhead Radar Inter-Switch
EW85 Elliptical WAVEGUIDE	Wheelhouse Top A/C Hut Aft Bulkhead X-Band Transceiver	Wheelhouse Top Top of A/C Hut Starboard X-Band Turning Unit
S-Band Radar Console (Display A)		
A205 RDR-DA-AC	Nav. Bridge Center Port S-Band Radar Console Display A Isolation Switch	Nav. Bridge Center Port S-Band Radar Console Display A Radar Processor
A184 RDR-TA-AC	Nav. Bridge Center Port S-Band Radar Console	+

	Display A Isolation Switch	
A211 RDR-DA-VID	Nav. Bridge Center Port S-Band Radar Console Display A Radar Processor	Wheelhouse Top A/C Hut Aft Bulkhead Radar Inter-Switch
A212 RDR-DA-TRIG	Nav. Bridge Center Port S-Band Radar Console Display A Radar Processor	Wheelhouse Top A/C Hut Aft Bulkhead Radar Inter-Switch
A213 RDR-DA-ISW1	Nav. Bridge Center Port S-Band Radar Console Display A Radar Processor	Wheelhouse Top A/C Hut Aft Bulkhead Radar Inter-Switch
A214 RDR-DA-ISW2	Nav. Bridge Center Port S-Band Radar Console Display A Radar Processor	Wheelhouse Top A/C Hut Aft Bulkhead Radar Inter-Switch
G-24 Gyro Feed	Nav. Bridge Center Port S-Band Radar Console Display A Data Junction Box	“B” Deck Electronics Equipment Room Gyro Compass
RDR-DA-GYRO	Nav. Bridge Center Port S-Band Radar Console Display A Data Junction Box	Nav. Bridge Center Port S-Band Radar Console Display A Radar Processor
RDR-DA-GPS	Nav. Bridge Center Port S-Band Radar Console Display A Radar Processor	Nav. Bridge Aft GPS Distribution Junction Box
DL-7	Nav. Bridge Center Port S-Band Radar Console Display A Data Junction Box	“B” Deck Electronics Equipment Room Speed Log Electronics Unit
RDR-DA-LOG	Nav. Bridge Center Port S-Band Radar Console Display A Data Junction Box	Nav. Bridge Center Port S-Band Radar Console Display A Radar Processor
DL-11	Nav. Bridge Center Port S-Band Radar Console Display A	“B” Deck Electronics Equipment Room Speed Log Electronics Unit
IMIC3-ARPA-S	Nav. Bridge Center Port S-Band Radar Console Display A Serial Interface Unit	Nav. Bridge Aft Starboard IMIC3 Workstation Desk
RDR-DA-ARPA	Nav. Bridge Center Port	Nav. Bridge Center Port

	S-Band Radar Console Display A Serial Interface Unit	ECS (ECPINS) Console (Blue)
RDR-DA-ARPA-SPARE	Nav. Bridge Center Port S-Band Radar Console Display A Serial Interface Unit	Nav. Bridge Center Port ECS (ECPINS) Console (Blue)
Cat5e Cable (AFT-S)	Nav. Bridge Center Port S-Band Radar Console Display A	Nav. Bridge Aft Console Radar Remote Monitor
VGA Cable	Nav. Bridge Center Port S-Band Radar Console Display A	Nav. Bridge Aft Console Port S-VDR Distribution Unit
A180 RDR-SCU-TUENABLE	Nav. Bridge Center Port S-Band Radar Console Display A Scanner Control Unit	Wheelhouse Top A/C Hut Aft Bulkhead S-Band Transceiver
A225 RDR-TA-VID	Nav. Bridge Center Port S-Band Radar Console Display A Radar Processor	Wheelhouse Top A/C Hut Aft Bulkhead Radar Inter-Switch
A226 RDR-TA-ISW	Nav. Bridge Center Port S-Band Radar Console Display A Radar Processor	Wheelhouse Top A/C Hut Aft Bulkhead Radar Inter-Switch
A166 RDR-SA-MOTOR	Nav. Bridge Center Port S-Band Radar Console Display A Scanner Control Unit	Wheelhouse Top Top of A/C Hut S-Band Safety Switch
A166 RDR-SA-MOTOR	Wheelhouse Top Top of A/C Hut S-Band Safety Switch	Wheelhouse Top Top of A/C Hut Centerline S-Band Turning Unit
A168 RDR-SA-BEARING	Wheelhouse Top A/C Hut Aft Bulkhead S-Band Transceiver	Wheelhouse Top Top of A/C Hut Centerline S-Band Turning Unit
A169 RDR-SA-PMTRIG	Wheelhouse Top A/C Hut Aft Bulkhead S-Band Transceiver	Wheelhouse Top Top of A/C Hut Centerline S-Band Turning Unit
Coaxial (Heliax)Waveguide AVA5-50	Wheelhouse Top A/C Hut Aft Bulkhead S-Band Transceiver	Wheelhouse Top Top of A/C Hut Centerline S-Band Turning Unit

Aft Radar Display (Slave Display D) Display Compatibility Unit (DCU)		
EP-101-3	Nav. Bridge Aft Port Console Crawl Space	Nav. Bridge Port Wing Panel EP-101
G-25 Gyro Feed	Nav. Bridge Aft Port Console Crawl Space	“B” Deck Electronics Equipment Room Gyro Compass
DL-9	Nav. Bridge Aft Port Console Crawl Space	“B” Deck Electronics Equipment Room Speed Log Electronics Unit
RDR-DD-GPS	Nav. Bridge Aft Port Console Crawl Space	Nav. Bridge Aft Port GPS Distribution Junction Box
D170 RDR-DD-DCU1	Nav. Bridge Aft Port Console Crawl Space	Nav. Bridge Aft Port Console Crawl Space
D171 RDR-DD-DCU2	Nav. Bridge Aft Port Console Crawl Space	Nav. Bridge Aft Port Console Crawl Space
D172 RDR-DD-VID	Nav. Bridge Aft Port Console Crawl Space	Nav. Bridge Aft Port Console Crawl Space
D173 RDR-DD-TRIG	Nav. Bridge Aft Port Console Crawl Space	Nav. Bridge Aft Port Console Crawl Space
D176 RDR-DD-DCU3	Nav. Bridge Aft Port Console Crawl Space	Nav. Bridge Aft Port Console Crawl Space
D254 RDR-DD-DCU4	Nav. Bridge Aft Port Console Crawl Space	Nav. Bridge Aft Port Console Crawl Space
D255 RDR-DD-ISW1	Nav. Bridge Aft Port Console Crawl Space	Wheelhouse Top Top of A/C Hut S-Band Safety Switch
D256 RDR-DD-ISW2	Nav. Bridge Aft Port Console Crawl Space	Wheelhouse Top Top of A/C Hut S-Band Safety Switch
D257 RDR-DD-VID	Nav. Bridge Aft Port Console Crawl Space	Wheelhouse Top Top of A/C Hut S-Band Safety Switch
D212 RDR-DD_MIST	Nav. Bridge Aft Port Console Crawl Space	Wheelhouse Top Top of A/C Hut S-Band Safety Switch
ECS (ECPINS) Console (Blue)		

TFX-EC06 (EC-06) Gyro Feed	Nav. Bridge Center Port ECS (ECPINS) Console (Blue) Terminal Block	"B" Deck Electronics Equipment Room Gyro Compass
TFX-EC07 (EC-07)	Nav. Bridge Center Port ECS (ECPINS) Console (Blue) Terminal Block	Nav. Bridge Aft Port Bulkhead above Chart Table Wind Speed and Direction Indicators
TFX-EC08 (EC-08)	Nav. Bridge Center Port ECS (ECPINS) Console (Blue) Terminal Block	"B" Deck Electronics Equipment Room Speed Log Electronics Unit
TFX-EC09 (EC-09)	Nav. Bridge Center Port ECS (ECPINS) Console (Blue) Terminal Block	Nav. Bridge Center Port S-Band Radar Console Display A Serial Interface Unit
WS/WS VDR	Nav. Bridge Center Port ECS (ECPINS) Console (Blue) Terminal Block	Nav. Bridge Aft Starboard Console S-VDR Distribution Unit
GYRO to VDR	Nav. Bridge Center Port ECS (ECPINS) Console (Blue)	Nav. Bridge Aft Starboard Console S-VDR Distribution Unit
AIS-7	Nav. Bridge Center Port ECS (ECPINS) Console (Blue)	Nav. Bridge Center Overhead Console above ECPINS Console (Blue)
AIS-1	Nav. Bridge Center Port ECS (ECPINS) Console (Blue)	Nav. Bridge Center Overhead Console above ECPINS Console (Blue)
AIS-11	Nav. Bridge Center Port ECS (ECPINS) Console (Blue)	Nav. Bridge Aft Port AIS J4N Junction Box above Chart Table
ICENAV-2	Nav. Bridge Center Port ECS (ECPINS) Console (Blue)	Nav. Bridge Aft Starboard IMIC3 Workstation
CHS-5	Nav. Bridgee Center Port ECS (ECPINS) Console (Blue)	Nav. Bridge Starboard Wing Chart Table
EC-2-1	Nav. Bridge Center Port ECS (ECPINS) Console (Blue)	Nav. Bridge Center ECS Console (GMDSS)
EC-2-2	Nav. Bridge Center Port ECS (ECPINS) Console (Blue)	Nav. Bridge Center ECS Console (GMDSS)
EC-2-3	Nav. Bridge Center Port ECS (ECPINS) Console (Blue)	Nav. Bridge Center ECS Console (GMDSS)
EC-2-4	Nav. Bridge Center Port ECS (ECPINS) Console (Blue)	Nav. Bridge Center ECS Console (GMDSS)
RG-59 Cable (BNC)	Nav. Bridge Center Port ECS (ECPINS) Console (Blue)	Nav. Bridge Forward Starboard Deck Head
Data Cable	Nav. Bridge Center Port ECS (ECPINS) Console (Blue)	Nav. Bridge Center ECS Console (GMDSS)
GPS Data	Nav. Bridge Center Port	Nav. Bridge Aft Port

	ECS (ECPINS) Console (Blue)	GPS Distribution Junction Box
Video Cable	Nav. Bridge Center Port ECS (ECPINS) Console (Blue)	Nav. Bridge Forward Port Console
Cat5e Cable (Blue)	Nav. Bridge Center Port ECS (ECPINS) Console (Blue)	Nav. Bridge Forward Port X-Band Radar Console

3.1.24 Contractor must re-route the following cables listed below in Cable Reroute Table.

Cable Re-route Table

Cable Number Type Label	From	To
EP-101-1	Nav. Bridge Center Port S-Band Radar Console Display A	Nav. Bridge Forward Starboard New S-Band Radar Console Display B
EP-101-4	Nav. Bridge Center Port S-Band Radar Console Display A	Nav. Bridge Center Port New Aft Looking Radar Console Display D
ECS-TO-TV RG-6 (To Modulator Blue Deck Lan Rack Ch.21)	Nav. Bridge Center Port ECS (ECPINS) Console (Blue)	Nav. Bridge Center ECS Console (GMDSS)

3.1.25 Contractor must reseal all deck penetrations, kick pipes, transits, etc. that are left following the removal and relocation of all equipment specified within this specification.

3.1.26 Contractor must supply and install new flooring materials to match the existing materials as found within the area of the Nav. Bridge from the removal or relocation of equipment and consoles. All materials must be certified for marine use.

3.1.27 Contractor must provide cable access to the Crawl Space under the Nav. Bridge for all of the new five (5) consoles by supplying and installing 4” long, 4” OD Schedule 40 pipe collars with a flange that will be bolted to the deck. Some may already have cable access but in order to properly fire stop, the existing cable access will have these new collars installed.

3.1.28 Contractor must seal each new and existing deck penetration with marine grade fire stop when all cabling is verified complete by CCG Technical Representative.

3.1.29 Contractor must supply and install an assortment of ROXTEC blocks and wedge kit to properly seal the existing deck transit located within the A/C Hut Wheelhouse Top Starboard Side.

3.1.30 Contractor must place any unused or un-removed cables into junction boxes and ensure they are isolated. Contractor must supply and install all junction boxes needed complete with glands.

3.1.31 Contractor must supply, fabricate, and install new mounted plates/shelves for the four (4) new Isolation Transformers to be installed within the Crawl Space area under the Nav. Bridge within the area of the new consoles.

3.1.32 Contractor must provide a grounding lug/stub for all the new equipment. Lugs/stubs to be attached to the vessels hull within close proximity to the equipment.

3.1.33 Contractor must disconnect and relocate the existing Nav. Light Panel from the forward center console starboard side to the aft section of this console within the area of the BNWAS Monitor and Alert Panel. Contractor must modify the console top to flush mount Nav. Light Panel and if possible reuse and modify the existing laminated panel.

Pictures: Nav. Light Panel

3.1.34 Contractor must clearfully remove and relocate the vessels Maneuvering Poster to the Overhead Console Starboard Aft to allow space for Nav. Light Panel.

3.1.35 Contractor must supply, install, and terminate two (2) new cable runs of Belden 5300 FE 2 C 18 AWG cable from relocated Nav. Light panel to X1 terminal block located in forward center console port side. Nav. Light Panel must be proven operational.

3.1.36 Contractor must flush mount one of the existing COMARK 19" monitors that have been removed in the location of where the Nav. Light Panel was located. Contractor must modify the console to allow space for the monitor and must relocate the existing searchlight control panels lower within the console. Reuse and modify the existing laminated panel if possible.

Picture: 19” Monitor Location and Searchlight Control Panels

3.1.37 Contractor must supply and install an additional mounting plate to the existing plate that the old radar transceivers was located in the A/C Hut Wheelhouse Top Aft Bulkhead. The material must be of the same composite and thickness. The additional mounting plate will be approximately 20” x 67” and must be primed with one coat and painted with two coats prior to mounting of any equipment. Equipment placement will be determined with CCG prior to mounting.

Picture: Additional Mounting Plate A/C Hut Aft Bulkhead

3.1.38 Contractor must install the new owner supplied FURUNO FAR 3000 and FMD 3000 Series Radars and ECDIS System, as detailed in reference drawings and as per manufacturer's installation instructions. Equipment list is shown below. Locations to be finalized prior to installing and mounting by CCG Technical Authority.

3.1.39 Contractor must supply all mounting hardware, unless supplied with equipment, and all hardware must be of 316 Grade Stainless Steel.

3.1.40 Contractor must reference the CCGS Terry Fox Proposed Changes to Navigation Bridge and Wheelhouse Drawing # 15-00-126 for proposed locations of the new consoles and relocated materials. Final location will be determined by Technical Authority prior to installation.

3.1.41 Contractor must reference specification 19131-410-SPC-045 CCGS Terry Fox Radar Replacement and Pedestal Modification Specification and Drawing #'s 19131-410-S-045 and 19131-410-A-046 by Allswater Marine Consultants for the removal of the old radar scanners, pedestal modifications, and the removal and installation of the waveguide and coaxial cable feeding the new radar scanners.

3.1.42 Equipment List

Equipment	Mounting Location
X-Band Console (Display A)	Nav. Bridge Forward Port Side next to console
S-Band Console (Display B)	Nav. Bridge Forward Starboard Side next to console
ECDIS Console (Display C)	Nav. Bridge Center Port Wing next to Chart Table
AFT Looking Radar Console (Display D)	Nav. Bridge Center Port next to new ECDIS Console (Display C)
Additional Console	Nav. Bridge Forward Port side next to new X-Band Radar Console (Display A)
Isolation Transformers (x4)	Nav. Bridge Crawl Space under each new console • X-Band Console Display A • S-Band Console Display B • ECDIS Console Display C • Aft Looking Radar Display D
Power Supply Unit (PSU-014) X-Band (Display A)	Wheelhouse Top A/C Hut Aft Bulkhead under X-Band Radar Transceiver (RTR-108)
Power Supply Unit (PSU-014) S-Band (Display B)	Wheelhouse Top A/C Hut Aft Bulkhead under S-Band Radar Transceiver (RTR-109)
Power Supply Unit (PSU-014) AFT Looking Radar (Display D)	Wheelhouse Top A/C Hut Aft Bulkhead in between the X & S-band Power Supply units
X-Band Transceiver RTR-108 25 KW	Wheelhouse Top A/C Hut Aft Bulkhead Top Section Starboard
S-Band Transceiver RTR-109 30 KW	Wheelhouse Top A/C Hut Aft Bulkhead Top Section Port
Isolation Switches (x4)	Mounted within each new console • X-Band Radar Display A • S-Band Radar Display B • ECDIS Display C

	• Aft Looking Radar Display D
Scanner Safety Switches (x3)	Three (3) new radar turning unit safety switches mounted at the following locations: • X-Band Radar Turning Unit Safety Switch mounted to mast on Wheelhouse Top, top of A/C Hut starboard • S-Band Radar Turning Unit Safety Switch mounted to mast on Wheelhouse Top, top of A/C Hut centerline • Aft Looking Radar Turning Unit Safety Switch mounted to new pedestal/platform Wheelhouse Top, top of A/C Hut Aft Starboard
X-Band Turning Unit RSB-130N (c/w 6.5 ft. Antenna)	Wheelhouse Top Top of A/C Hut Starboard
S-Band Turning Unit RSB-131N (c/w 12 ft. Antenna)	Wheelhouse Top Top of A/C Hut Centerline
X-Band Turning Unit RSB-128 (c/w 4 ft. Antenna)	Wheelhouse Top Top of A/C Hut Starboard Aft
Port Wing Monitor Bracket	Mounted to Port Wing Console
Starboard Wing Monitor Bracket	Mounted to Starboard Wing Console
Aft Console Monitor Bracket	Mounted to Aft Port Console
Commanding Officers Cabin Monitor Bracket	Mounted at determined location
BNWAS/RDR Junction Box	Nav. Bridge Crawl Space

3.1.43 Contractor must supply the material, fabricate, and install new base adapter plates for two (2) new consoles ECDIS (Display C) and Aft Looking Radar (Display D). Refer to Drawing # 68805901. The adapter bases will be mounted between the new consoles and the deck. The adapter base will be of welded steel construction, a minimum of 3/16" thickness, and it will be primed and painted to match the new consoles. All dimensions are to be confirmed at the time of fabrication and installation.

3.1.44 Contractor must install five (5) new owner supplied consoles, two (2) of which are installed to the new fabricated console adapter bases.

3.1.45 Contractor must supply and install new cable support brackets for all cabling and waveguides within this specification.

3.1.46 Contractor must install new owner supplied waveguide hangers to replace all the existing hangers from the radar transceivers to the radar turning units.

3.1.47 Contractor must supply and install junction boxes complete with cable glands for the AC Power within all new consoles.

3.1.48 Contractor must supply and install a suitable junction box for marine environment complete with at least six (6) cable glands and can accommodate at least 16 terminal blocks for the interfacing of the Radar/ECDIS equipment. Each junction box must be labelled accordingly.

3.1.49 Contractor must install all cabling as supplied by owner except AC power feeds as referenced in preliminary drawing CCGS Terry Fox FURUNO FAR/FMD 3000 Series RADAR/ECDIS Type 1 Configuration and in Cable List below. Contractor must supply and install all required AC power cables.

3.1.50 All cable terminations will be conducted by CCG Technicians with the exception of AC power. Contractor must terminate all AC required power.

3.1.51 Cable List

Cable Label	Cable Type	From	To	Signal
X-Band Radar (Display A)				
RDR-A-WG	Elliptical Waveguide EW85	X-Band Radar Transceiver RTR-108 Wheelhouse Top A/C Hut Aft Bulkhead	X-Band Turning Unit RSB-130 Wheelhouse Top Top of A/C Hut Starboard mast	RF
RDR-A-2	TTYCYSL A-10	X-Band Transceiver RTR-108 Wheelhouse Top A/C Hut Aft Bulkhead	X-Band Turning Unit RSB-130 Wheelhouse Top Top of A/C Hut Starboard mast	Power/ Data
RDR-A-1	Factory Cable	X-Band Transceiver RTR-108 Wheelhouse Top A/C Hut Aft Bulkhead	Power Supply Unit (PSU-014) X-Band Wheelhouse Top A/C Hut Aft Bulkhead	Power/ Data
EP-101-2	Marine AC 14/3	Nav. Bridge Crawl Space EP-101-2 AC Power Junction Box	Nav. Bridge Forward Port X-Band Radar Console (Display A) EP-101-2	AC Power

			AC Power Junction Box	
EP-101-2	Marine AC 14/3	Nav. Bridge Forward Port X-Band Radar Console (Display A) EP-101-2 AC Power Junction Box	Nav. Bridge Forward Port X-Band Radar Console (Display A) EP-101-2 Isolation Switch	AC Power
EP-101-2-A	Marine AC 14/3	Nav. Bridge Forward Port X-Band Radar Console (Display A) EP-101-2 Isolation Switch	Wheelhouse Top Top of A/C Hut Starboard X-Band Radar Turning Unit Safety Switch	AC Power
EP-101-2-B	Marine AC 14/3	Wheelhouse Top Top of A/C Hut Starboard X-Band Radar Turning Unit Safety Switch	Wheelhouse Top A/C Hut Aft Bulkhead X-Band Radar Power Supply Unit PSU-014	AC Power
EP-101-2-C	Marine AC 14/3	Nav. Bridge Forward Port X-Band Radar Console (Display A) EP-101-2 Isolation Switch	Nav. Bridge Crawl Space X-Band Radar Isolation Transformer	AC Power
EP-101-2-D	Marine AC 14/3	Nav. Bridge Crawl Space X-Band Radar Isolation Transformer	Nav. Bridge Forward Port X-Band Radar Console (Display A) UPS	AC Power
RDR-A-IHR	Belden 1300SB	X-Band Radar Transceiver RTR-108 Wheelhouse Top A/C Hut Aft Bulkhead	Nav. Bridge Forward Port Additional Console (Next to X-Band Radar Console Display A)	LAN
RDR-A-3	Belden 1300SB	X-Band Radar Power Supply Unit (PSU-014) Wheelhouse Top A/C Hut Aft Bulkhead	Nav. Bridge Forward Port X-Band Radar Console (Display A) Radar Processor	LAN
RDR-A-4	Belden 8777SB	X-Band Radar Power Supply Unit (PSU-014) Wheelhouse Top A/C Hut Aft Bulkhead	Nav. Bridge Forward Port X-Band Radar Console (Display A) Radar Processor	DATA
RDR-A-5	Belden 1300SB	Nav. Bridge Forward Port	Nav. Bridge Center Port Wing	LAN

		X-Band Radar Console (Display A)	ECDIS Console (Display C)	
RDR-A-6	Belden 1300SB	Nav. Bridge Forward Port X-Band Radar Console (Display A)	Nav. Bridge Center Port Wing ECDIS Console (Display C)	LAN
RDR-A-12	Belden 1300SB	Nav. Bridge Forward Port X-Band Radar Console (Display A)	Nav. Bridge Center Port Wing ECDIS Console (Display C)	LAN
RDR-A-13	Factory Cable	Nav. Bridge Forward Port X-Band Radar Console (Display A)	RCU-026 Nav. Bridge Port Wing Console	Data
RDR-A-14	Video	Nav. Bridge Forward Port X-Band Radar Console (Display A)	Nav. Bridge Port Wing Console	Data
RDR-A-15	Belden 8777SB	Nav. Bridge Forward Port X-Band Radar Console (Display A)	Nav. Bridge Port Wing Console	Data
RDR-A-AIS	Belden 8723SB	Nav. Bridge Forward Port X-Band Radar Console (Display A)	Nav. Bridge Aft Port GPS Distribution Junction Box AIS Distribution	Data
RDR-A-HDT	Belden 8723SB	Nav. Bridge Forward Port X-Band Radar Console (Display A)	“B” Deck Electronics Equipment Room Gyro Compass Cabinet	Data
RDR-A-GPS1	Belden 8723SB	Nav. Bridge Forward Port X-Band Radar Console (Display A)	Nav. Bridge Aft Port GPS Distribution Junction Box Chart Table	Data
RDR-A-GPS2	Belden 8723SB	Nav. Bridge Forward Port X-Band Radar Console (Display A)	Nav. Bridge Aft Port GPS Distribution Junction Box Chart Table	Data
RDR-A-LOG	Belden 8723SB	Nav. Bridge Forward Port X-Band Radar Console (Display A)	“B” Deck Electronics Equipment Room Speed Log Electronics Unit	Data

RDR-A-IMIC3	Belden 8723SB	Nav. Bridge Forward Port X-Band Radar Console (Display A)	Nav. Bridge Aft Starboard IMIC3 Workstation	Data
RDR-A-DEPTH	Belden 8723SB	Nav. Bridge Forward Port X-Band Radar Console (Display A	Nav. Bridge Aft Port GPS Distribution Junction Box Chart Table	Data
RDR-A-WSD	Belden 8723SB	Nav. Bridge Forward Port X-Band Radar Console (Display A)	Nav. Bridge Aft Port GPS Distribution Junction Box Chart Table	Data
RDR-A-VDR	Belden 1300SB	Nav. Bridge Forward Port X-Band Radar Console (Display A)	Nav. Bridge Aft Console Starboard S-VDR Distribution Unit	Data
BNWAS-15	Belden 8777SB	Nav. Bridge Forward Port X-Band Radar Console (Display A)	Nav. Bridge Crawl Space BNWAS/RDR Junction Box	Data
S-Band Radar (Display B)				
RDR-B-WG	Coaxial Waveguide AVA5-50	S-Band Radar Transceiver RTR-109 Wheelhouse Top A/C Hut Aft Bulkhead	S-Band Turning Unit RSB-131N Wheelhouse Top Top of A/C Hut Centerline Mast	RF
RDR-B-2	TTYCYSL A-10	S-Band Radar Transceiver RTR-109 Wheelhouse Top A/C Hut Aft Bulkhead	S-Band Turning Unit RSB-131N Wheelhouse Top Top of A/C Hut Centerline Mast	Power/ Data
RDR-B-1	Factory Cable	S-Band Radar Transceiver RTR-109 Wheelhouse Top A/C Hut Aft Bulkhead	Power Supply Unit (PSU-014) S-Band Wheelhouse Top A/C Hut Aft Bulkhead	Power/ Data
EP-101-1	Marine AC 14/3	Nav. Bridge Crawl Space EP-101-1 AC Power Junction Box	Nav. Bridge Forward Starboard S-Band Radar Console (Display B) EP-101-1 AC Power Junction Box	AC Power
EP-101-1	Marine AC 14/3	Nav. Bridge Forward Starboard S-Band Radar Console	Nav. Bridge Forward Starboard S-Band Radar Console	AC Power

		(Display B) EP-101-1 AC Power Junction Box	(Display B) EP-101-1 Isolation Switch	
EP-101-1-A	Marine AC 14/3	Nav. Bridge Forward Starboard S-Band Radar Console (Display B) EP-101-1 Isolation Switch	Wheelhouse Top Top of A/C Hut Centerline Mast S-Band Radar Turning Unit Safety Switch	AC Power
EP-101-1-B	Marine AC 14/3	Wheelhouse Top Top of A/C Hut Centerline Mast S-Band Radar Turning Unit Safety Switch	Wheelhouse Top A/C Hut Aft Bulkhead S-Band Radar Power Supply Unit PSU-014	AC Power
EP-101-1-C	Marine AC 14/3	Nav. Bridge Forward Starboard S-Band Radar Console (Display B) EP-101-1 Isolation Switch	Nav. Bridge Crawl Space S-Band Radar Isolation Transformer	AC Power
EP-101-1-D	Marine AC 14/3	Nav. Bridge Crawl Space S-Band Radar Isolation Transformer	Nav. Bridge Forward Starboard S-Band Radar Console (Display B) UPS	AC Power
RDR-B-3	Belden 1300SB	S-Band Radar Power Supply Unit (PSU-014) Wheelhouse Top A/C Hut Aft Bulkhead	Nav. Bridge Forward Starboard S-Band Radar Console (Display B) Radar Processor	LAN
RDR-B-4	Belden 8777SB	S-Band Radar Power Supply Unit (PSU-014) Wheelhouse Top A/C Hut Aft Bulkhead	Nav. Bridge Forward Starboard S-Band Radar Console (Display B) Radar Processor	DATA
RDR-B-5	Belden 1300SB	Nav. Bridge Forward Starboard S-Band Radar Console (Display B)	Nav. Bridge Center Port Wing ECDIS Console (Display C)	LAN
RDR-B-6	Belden 1300SB	Nav. Bridge Forward Starboard S-Band Radar Console (Display B)	Nav. Bridge Center Port Wing ECDIS Console (Display C)	LAN
RDR-B-12	Belden 1300SB	Nav. Bridge Forward Starboard S-Band Radar Console	Nav. Bridge Center Port Wing ECDIS Console	LAN

		(Display B)	(Display C)	
RDR-B-13	Factory Cable	Nav. Bridge Forward Starboard S-Band Radar Console (Display B)	RCU-026 Nav. Bridge Starboard Wing Console	Data
RDR-B-14	Video	Nav. Bridge Forward Starboard S-Band Radar Console (Display B)	Nav. Bridge Starboard Wing Console	Data
RDR-B-15	Belden 8777SB	Nav. Bridge Forward Starboard S-Band Radar Console (Display B)	Nav. Bridge Starboard Wing Console	Data
RDR-B-16	Belden 1300SB	Nav. Bridge Forward Starboard S-Band Radar Console (Display B)	"B" Deck Forward Starboard Commanding Officer's Day Cabin Desk Area	
RDR-B-AIS	Belden 8723SB	Nav. Bridge Forward Starboard S-Band Radar Console (Display B)	Nav. Bridge Aft Port GPS Distribution Junction Box AIS Distribution	Data
RDR-B-HDT	Belden 8723SB	Nav. Bridge Forward Starboard S-Band Radar Console (Display B)	"B" Deck Electronics Equipment Room Gyro Compass Cabinet	Data
RDR-B-GPS1	Belden 8723SB	Nav. Bridge Forward Starboard S-Band Radar Console (Display B)	Nav. Bridge Aft Port GPS Distribution Junction Box Chart Table	Data
RDR-B-GPS2	Belden 8723SB	Nav. Bridge Forward Starboard S-Band Radar Console (Display B)	Nav. Bridge Aft Port GPS Distribution Junction Box Chart Table	Data
RDR-B-LOG	Belden 8723SB	Nav. Bridge Forward Starboard S-Band Radar Console (Display B)	"B" Deck Electronics Equipment Room Speed Log Electronics Unit	Data
RDR-B-IMIC3	Belden 8723SB	Nav. Bridge Forward Starboard S-Band Radar Console (Display B)	Nav. Bridge Aft Starboard IMIC3 Workstation	Data

RDR-B-DEPTH	Belden 8723SB	Nav. Bridge Forward Starboard S-Band Radar Console (Display B)	Nav. Bridge Aft Port GPS Distribution Junction Box Chart Table	Data
RDR-B-WIND	Belden 8723SB	Nav. Bridge Forward Starboard S-Band Radar Console (Display B)	Nav. Bridge Aft Port GPS Distribution Junction Box Chart Table	Data
RDR-B-VDR	Belden 1300SB	Nav. Bridge Forward Starboard S-Band Radar Console (Display B)	Nav. Bridge Aft Console Starboard S-VDR Distribution Unit	Data
BNWAS-16	Belden 8723SB	Nav. Bridge Forward Starboard S-Band Radar Console (Display B)	Nav. Bridge Crawl Space BNWAS/RDR Junction Box	Data
ECDIS (Display C)				
TEP-101-10	Marine AC 14/3	TEP-101-10 AC Junction Box ECDIS Console (Display C)	ECDIS Isolation Switch ECDIS Console (Display C)	AC Power
TEP-101-10-A	Marine AC 14/3	ECDIS Isolation Switch ECDIS Console (Display C)	ECDIS (Display C) Isolation Transformer Nav. Bridge Crawl Space	AC Power
TEP-101-10-B	Marine AC 14/3	ECDIS (Display C) Isolation Transformer Nav. Bridge Crawl Space	ECDIS Console (Display C) UPS	AC Power
ECD-C-7	Belden 1300SB	ECDIS Console (Display C) Nav. Bridge Center Port	"B" Deck Forward Starboard Commanding Officer's Day Cabin Desk Area	Data
ECD-C-AIS	Belden 8723SB	ECDIS Console (Display C) Nav. Bridge Center Port	Nav. Bridge Aft Port GPS Distribution Junction Box AIS Distribution	Data
ECD-C-HDT	Belden 8723SB	ECDIS Console (Display C) Nav. Bridge Center Port	"B" Deck Electronics Equipment Room Gyro Compass Cabinet	Data
ECD-C-GPS1	Belden 8723SB	ECDIS Console (Display C)	Nav. Bridge Aft Port	Data

		Nav. Bridge Center Port	GPS Distribution Junction Box Chart Table	
ECD-C-GPS2	Belden 8723SB	ECDIS Console (Display C) Nav. Bridge Center Port	Nav. Bridge Aft Port GPS Distribution Junction Box Chart Table	Data
ECD-C-LOG	Belden 8723SB	ECDIS Console (Display C) Nav. Bridge Center Port	"B" Deck Electronics Equipment Room Speed Log Electronics Unit	Data
ECD-C-NAVTEX	Belden 8777SB	ECDIS Console (Display C) Nav. Bridge Center Port	Nav. Bridge Center Aft GMDSS Console	Data
GPS1-C-7	Belden 1300SB	ECDIS Console (Display C) Nav. Bridge Center Port	Nav. Bridge Aft Starboard Nav. Chart Console Center FURUNO GP170 #1	Data
GPS2-C-8	Belden 1300SB	ECDIS Console (Display C) Nav. Bridge Center Port	Nav. Bridge Aft Starboard Nav. Chart Console Center FURUNO GP170 #2	Data
BNWAS-17	Belden 8777SB	ECDIS Console (Display C) Nav. Bridge Center Port	Nav. Bridge Crawl Space BNWAS/RDR Junction Box	Data
Aft Looking Radar (Display D)				
RDR-D-1	Factory Cable	Power Supply Unit PSU-014 Aft Looking Radar Wheelhouse Top A/C Hut Aft Bulkhead	Aft Radar Scanner Wheelhouse Top Top of A/C Hut Aft Starboard New Pedestal	Power/ Data
EP-101-4	Marine AC 14/3	EP-101-4 AC Junction Box Aft Looking Radar Console (Display D) Nav. Bridge Center Next to ECDIS Console	Isolation Switch Aft Looking Radar Console (Display D)	AC Power
EP-101-4-A	Marine AC 14/3	Isolation Switch Aft Looking Radar Console (Display D)	Aft Radar Scanner Safety Switch Wheelhouse Top	AC Power

		Nav. Bridge Center next to ECDIS Console	Top of A/C Hut Aft Starboard new pedestal	
EP-101- 4-B	Marine AC 14/3	Aft Radar Scanner Safety Switch Wheelhouse Top Top of A/C Hut Aft Starboard new pedestal	Power Supply Unit PSU-014 Aft Looking Radar Wheelhouse Top A/C Hut Aft Bulkhead	AC Power
EP-101- 4-C	Marine AC 14/3	Isolation Switch Aft Looking Radar Console (Display D) Nav. Bridge Center next to ECDIS Console	Isolation Transformer Aft Looking Radar Nav. Bridge Crawl Space	AC Power
EP-101- 4-D	Marine AC 14/3	Isolation Transformer Aft Looking Radar Nav. Bridge Crawl Space	UPS Aft Looking Radar Console (Display D) Nav. Bridge Center next to ECDIS Console	AC Power
RDR-D- IHR	Belden 1300SB	Power Supply Unit PSU-014 Aft Looking Radar Wheelhouse Top A/C Hut Aft Bulkhead	Nav. Bridge Forward Port Additional Console	LAN
RDR-D-2	Belden 1300SB	Power Supply Unit PSU-014 Aft Looking Radar Wheelhouse Top A/C Hut Aft Bulkhead	Aft Looking Radar Console (Display D) Nav. Bridge Center next to ECDIS Console	LAN
RDR-D-3	Belden 8777SB	Power Supply Unit PSU-014 Aft Looking Radar Wheelhouse Top A/C Hut Aft Bulkhead	Aft Looking Radar Console (Display D) Nav. Bridge Center next to ECDIS Console	Data
RDR-D-4	Belden 1300SB	Aft Looking Radar Console (Display D) Nav. Bridge Center Port	ECDIS Console (Display C) Nav. Bridge Center Port	LAN
RDR-D-5	Belden 1300SB	Aft Looking Radar Console (Display D) Nav. Bridge Center Port	ECDIS Console (Display C) Nav. Bridge Center Port	LAN
RDR-D- 11	Factory Cable	Aft Looking Radar Console (Display D) Nav. Bridge Center Port next to ECDIS Console	Nav. Bridge Starboard Wing Console	Data

RDR-D-12	Video Cable	Aft Looking Radar Console (Display D) Nav. Bridge Center Port next to ECDIS Console	Nav. Bridge Starboard Wing Console	Video
RDR-D-13	Belden 8777SB	Aft Looking Radar Console (Display D) Nav. Bridge Center Port next to ECDIS Console	Nav. Bridge Starboard Wing Console	Data
RDR-D-14	Factory Cable	Aft Looking Radar Console (Display D) Nav. Bridge Center Port next to ECDIS Console	Nav. Bridge Aft Console Port	Data
RDR-D-15	Video Cable	Aft Looking Radar Console (Display D) Nav. Bridge Center Port next to ECDIS Console	Nav. Bridge Aft Console Port	Video
RDR-D-16	Belden 8777SB	Aft Looking Radar Console (Display D) Nav. Bridge Center Port next to ECDIS Console	Nav. Bridge Aft Console Port	Data
RDR-D-AIS	Belden 8723SB	Aft Looking Radar Console (Display D) Nav. Bridge Center Port next to ECDIS Console	Nav. Bridge Aft Port GPS Distribution Junction Box AIS Distribution	Data
RDR-D-HDT	Belden 8723SB	Aft Looking Radar Console (Display D) Nav. Bridge Center Port next to ECDIS Console	“B” Deck Electronics Equipment Room Gyro Compass Cabinet	Data
RDR-D-GPS1	Belden 8723SB	Aft Looking Radar Console (Display D) Nav. Bridge Center Port next to ECDIS Console	Nav. Bridge Aft Port GPS Distribution Junction Box Chart Table	Data
RDR-D-GPS2	Belden 8723SB	Aft Looking Radar Console (Display D) Nav. Bridge Center Port next to ECDIS Console	Nav. Bridge Aft Port GPS Distribution Junction Box Chart Table	Data
RDR-D-LOG	Belden 8723SB	Aft Looking Radar Console (Display D) Nav. Bridge Center Port next to ECDIS Console	“B” Deck Electronics Equipment Room Speed Log Electronics Unit	Data
BNWAS-18	Belden 8777SB	Aft Looking Radar Console (Display D)	Nav. Bridge Crawl Space	Data

		Nav. Bridge Center Port next to ECDIS Console	BNWAS/RDR Junction Box	
Additional Cables				
BNWAS-14	Belden 8777SB	Nav. Bridge Crawl Space BNWAS/RDR Junction Box	Nav. Bridge Forward Port Console (Aft) BNWAS Main Electronics Unit	Data
ECS-GPS	Belden 8723SB	Nav. Bridge Center Aft ECS Console Next to GMDSS Console	Nav. Bridge Aft Port GPS Distribution Box Next to Chart Table	Data
ECS-HDT	Belden 8723SB	Nav. Bridge Center Aft ECS Console Next to GMDSS Console	"B" Deck Electronics Equipment Room Gyro Compass Cabinet	Data
ECS-AIS	Belden 8723SB	Nav. Bridge Center Aft ECS Console Next to GMDSS Console	Nav. Bridge Aft Port GPS Distribution Box Next to Chart Table	Data
ECS-WSD	Belden 8723SB	Nav. Bridge Center Aft ECS Console Next to GMDSS Console	Nav. Bridge Aft Port GPS Distribution Box Next to Chart Table	Data
ECS-ARPA-X	Belden 8723SB	Nav. Bridge Center Aft ECS Console Next to GMDSS Console	Nav. Bridge Forward Port X-Band Radar Console (Display A)	Data
ECS-LOG	Belden 8723SB	Nav. Bridge Center Aft ECS Console Next to GMDSS Console	"B" Deck Electronics Equipment Room Speed Log Electronics Unit	Data
ECS-DEPTH	Belden 8723SB	Nav. Bridge Center Aft ECS Console Next to GMDSS Console	Nav. Bridge Aft Port GPS Distribution Box Next to Chart Table	Data
ECS-VID-CO	Belden 1300SB	Nav. Bridge Nav. Console Port ECS Console (New) Next to X-Band Radar Console (Display A)	Officer's Deck Commanding Officers Cabin Day Cabin	LAN
ICE-VU-MATRIX	Belden 1300SB	Nav. Bridge Aft Starboard Desk	Nav. Bridge Center Port ECDIS Console (Display C)	LAN

AIS-HDT	Belden 8723SB	Nav. Bridge Aft Port Above Chart Table AIS Junction Box	"B" Deck Electronics Equipment Room Gyro Compass Cabinet	Data
VDR-HDT	Belden 8723SB	Nav. Bridge Aft Console Starboard S-VDR Distribution Unit	Nav. Bridge Aft Port GPS Distribution Junction Box Chart Table	Data
VDR-WSD	Belden 8723SB	Nav. Bridge Aft Console Starboard S-VDR Distribution Unit	Nav. Bridge Aft Port GPS Distribution Junction Box Chart Table	Data
GPS-LOG	Belden 8723SB	Nav. Bridge Aft Port GPS Distribution Junction Box Chart Table	"B" Deck Electronics Equipment Room Speed Log Electronics Unit	Data

3.2 Location

3.2.1 Navigating Bridge Deck
3.2.2 Wheelhouse Top
3.2.3 Officers Deck
3.2.4 Boat Deck
3.2.5 Main Mast
3.2.6 Aft Mast

3.3 Interferences

3.3.1 Contractor must be responsible for the identification of interference items, their temporary removal, storage, and refitting to vessel.

Part: 4 PROOF OF PERFORMANCE:

4.1 Inspection

4.1.1 All work must be subject to witness by the Chief Engineer of delegate and the attending surveyor if applicable.

4.2 Testing

4.2.1 The commissioning of the new radar and ECDIS system must be done under direction of an approved FSR and in accordance with the manufacturers approved procedures. This will be arranged by CCG personal.

4.2.2 Contractor must be responsible to ensure all relocated equipment is in proper working order witnessed and at the satisfactory of the Technical Authority.

4.2.3 All cables are to be checked for continuity after installation to ensure operational capability. Should any cable run fail to pass testing, the cable must be replaced at the contractor's expense.

4.2.4 All cable testing must be witnessed by the Technical Authority.

4.2.5 Contractor must be responsible to ensure new AC/DC circuits are proven operational.

4.2.6 All welds will be subjected to 100% visual inspection and hose test to prove watertight.

4.3 Certification

N/A

Part: 5 DELIVERABLES:

5.1 Drawings/Reports

5.1.1 Contractor must provide the Technical Authority with a report of the contractors work in both electronic and hardcopy formats outlining the details of the inspections and any alterations/repairs prior to the acceptance of this item.

Spec item #: L-03	**SPECIFICATION**	TCMSB Field #: N/A
SEATEL TVRO ANTENNA INSTALLATION		

Seatel TVRO Antenna Installation

PART 1: SCOPE

1.1. The intention of this specification is for the removal of the existing Fleet Broadband and upgrade to the new owner supplied Seatel TV Antenna System.

PART 2: REFERENCES

2.1. 99-141160-A Sea Tel TV Antenna Systems Dealer Technical Manual

2.2. Preliminary Drawing Terry Fox TVRO Wiring Diagram

2.3. 692057BD Email at Sea Block Diagram_Rev_D.dwg

2.4. Fleet Broadband Drawing T13_FBB_1610_WD.dwg

2.5. TP127E – Ships Electrical Standards

2.6. IEEE 45- Recommended Practice for Electrical Installations on Ships

2.7. Specification for the Installation of Shipboard Electronic Equipment (70-000-000-EU-Jan-001)

2.8. General Information for the Rules and Regulations for the Classification of Ships.

PART 3: TECHNICAL DESCRIPTION

3.1. General

3.1.1. The contractor must supply all equipment, enclosures, ventilation, staging, scaffolding, chain falls, crane, slings, and shackles necessary to perform the work. All lifting equipment shall be appropriate for the expected duties, and be accompanied by current certification indicating, or be permanently marked as to being, of a safe working load for the expected duties. Any brackets, mounts, or any other welded attachments required in the performance of this specification must be welded into place by certified welders.

3.1.2. Prior to any hot work taking place, the contractor must ensure that the area of work and all equipment has been sufficiently protected from any sparks or metal filings.

3.1.3. Contractor must ensure that all areas have been cleaned and free of any debris resulting from the performance of this specification item.

3.1.4. Contractor shall be responsible for the temporary removal and reinstallation of any deck heads, bulkheads, paneling, insulation, and any items that is deemed to be interfering with the installation of cables or equipment within this specification.

3.1.5. The Contractor shall ensure all new and existing electrical wires affected in this modification shall be properly supported in accordance with accepted / approved practices.

3.1.6. Electrical penetrations through frames or brackets shall be in accordance with accepted / approved practices.

3.1.7. The Contractor shall paint all disturbed steel as per client specifications before installation of new Seatel Antenna. 1 coat of primer and 2 finish coats.

3.1.8. The Contractor shall ensure that provincial regulations are met with regard to all required training for workers including, but not necessarily limited to, fall arrest training/certification.

3.2. Removals

3.2.1. Prior to the commencement of any electrical work, the contractor must ensure all electrical supplies feeding the systems have been isolated at the source following an established lockout/tagout procedure.

3.2.2. Electrical isolations for AC power are as follows.

3.2.2.1. L-102-19 Fleet Broadband Heater Nav Bridge Deck

3.2.2.2. TEP-101-4 Fleet Broadband System Nav Bridge Deck

3.2.3. All electronic equipment and components removed from the vessel resulting from the performance of this specification must be safely stored and returned to the owner.

3.2.4. It would be recommended to start the cable removal from the equipment side to eliminate any discrepancies within the applicable drawings

3.2.5. Fleet Broadband antenna heater cable (L102-19) must be disconnected from antenna and cable retained and protected for use with new Seatel Antenna being installed as part of this spec.

3.2.6. Contractor must disconnect and remove all existing equipment and cabling indicated in table 1 (TVRO Cable Removal List) and table 2 (TVRO Equipment Removal List). Refer to drawings indicated in Reference 2.3 and 2.4.

3.2.6.1.1. **TVRO Cable Removal List**

Table 1

Cable Label	Cable Type	From	To	Signal
SAC-ANT	LMR-600	Nav Bridge Deck Communications Desk	Wheelhouse Top Fleet Broadband Ant	RF
SATTV-6	LMR-400	Red Deck Electronics Equipment Room Rack 1	Red Deck Captains Cabin	RF
SATTV-7	LMR-400	Red Deck Electronics Equipment Room Rack 1	Red Deck Chief Engineers Cabin	RF
SATTV-8	LMR-400	Red Deck Electronics Equipment Room Rack 1	Main Deck Officers/Crews Lounge	RF
SATTV-9	LMR-400	Red Deck Electronics Equipment Room Rack 1	Main Deck Officers/Crews Lounge	RF
SATTV	LMR-400	Red Deck Electronics Equipment Room Rack 1	Red Deck Chief Officers Cabin	RF
SATTV	LMR-400	Red Deck Electronics Equipment Room Rack 1	Red Deck Chief Officers Cabin	RF
SATTV	LMR-400	Red Deck Electronics Equipment Room Rack 1	Red Deck Chief Officers Cabin	RF

3.2.6.1.2. **TVRO Equipment Removal List**

Table 2

Equipment	Location
Fleet Broadband Antenna	Wheelhouse Top Centerline
Fleet Broadband Antenna Adapter Plate	Wheelhouse Top Centerline

3.2.7. The contractor must dispose of all cables that have been identified in the cable removal list at their own expense.

3.3. Installations

3.3.1. Contractor must work with a Coast Guard Electronic Technician/Technologist to oversee the installation of the new system and ensure compliance with applicable Coast Guard standards.

3.3.2. For the purpose of adjustment contractor must include a unit cost for the supply and install for one (1) roxtec, or equal class approved transit with glands.

3.3.3. Contractor must provide a unit price for the installation of 5 meters of each type of cable identified in table 3.

3.3.4. Contractor must install the new owner supplied Sea Tel TV Antenna as detailed in reference drawings and as per manufacturer's installation instructions found in reference 2.1. Contractors will mount Sea Tel TV Antenna on top of Wheelhouse Centerline Antenna Pedestal in previous location of Fleet Broadband Antenna. The final installation location will be approved by CGTA.

3.3.5. The contractor must install the owner supplied cable as indicated in table 3 below:

Table 3

Cable Label	Cable Type	From	To	Signal
TVRO-2	Belden RG11	Blue Deck Equipment Rack 2	Wheelhouse Top New Seatel Ant	RF
TVRO-3	Belden RG11	Blue Deck Equipment Rack 2	Wheelhouse Top New Seatel Ant	RF
TVRO-4	Belden RG11	Blue Deck Equipment Rack 2	Wheelhouse Top New Seatel Ant	RF
TVRO-5	Belden 8723SB	Blue Deck Equipment Rack 2	Red Deck Electronic Equipment Room Gyro	Data
TVRO-23	Belden RG6	Blue Deck Equipment Rack 2	Red Deck Captains Cabin	RF
TVRO-24	Belden RG6	Blue Deck Equipment Rack 2	Red Deck Chief Engineers Cabin	RF
TVRO-25	Belden RG6	Blue Deck Equipment Rack 2	Main Deck Officers/Crew Lounge	RF
TVRO-26	Belden RG6	Blue Deck Equipment Rack 2	Red Deck Chief Officers Cabin	RF
TVRO-27	Belden RG6	Blue Deck Equipment Rack 2	Red Deck Logistics Officer Cabin	RF
TVRO-28	Belden RG6	Blue Deck Equipment Rack 2	Red Deck Senior Engineer Cabin	RF
TVRO-29	Belden RG6	Blue Deck Equipment Rack 2	Red Deck Elect Officer Cabin	RF

3.3.6. All cable terminations will be conducted by CCG Technicians with the exception of AC power.

3.3.7. Contractor must install a new AC power feed from Power Panel L104-17 located on Blue Deck hallway near Lan Server Rack to Equipment Rack #2 located in same general area. Contractor shall supply class approved Cable, 15 Amp Circuit Breaker, and Electrical Outlet. New Cable to include marine protective braid with outer PVC jacket. Final mounting location of Electrical outlet will be determined by CGTA.

3.3.8. Contractor must supply and install a IP67 rated junction box with two cable glands. The junction box will be used to house the AC connection to the Seatel Antenna. It will be located within 6 feet of newly installed SeaTel antenna, final location will be determined by the Technical Authority.

3.3.9. The Contractor must terminate Antenna heater cable retained in line item 3.2.5 with special connector supplied by owner in junction box referenced in line item 3.3.8. Label this cable TVRO-1.

3.3.10. The contractor must follow existing cable trays throughout the vessel where fitted for all cable installation. Once installed, all cabling must be secured as per TP127.

3.3.11. Contractor must re-use existing cable penetrations and repack with classification society approved products. Any cable penetration that is determined to be not reusable by the contractor must be approved for replacement by either the Technical Authority or Chief Engineer. Contractor must supply and install all required materials.

3.3.12. All cabling installed by contractor must be identified with a marked stamped stainless steel metal tag. Labels are to be securely affixed to the cable at each end, through any deck, deck head, and gland penetration. The designation for each cable is provided in Table 3.

GOVERNMENT SUPPLIED MATERIAL

4.1. Sea Tel TV Antenna

4.2. All cabling with the exception of AC power cable.

PART 4: PROOF OF PERFORMANCE

4.1 Inspection

4.1.1 All work must be subject to witness by the Chief Engineer or delegate and the attending surveyor if applicable.

4.2 Testing

4.2.1 The commissioning of the new Sea Tel System shall be done in accordance with the manufacturers approved procedures. This will be arranged by CCG personal.

4.2.2 All cables are to be checked for continuity after installation to ensure operational capability. Should any cable run fail to pass testing, the cable must be replaced at the contractor's expense.

4.2.3 All cable testing shall be witnessed by the Technical Authority.

4.2.4 Contractor shall be responsible to ensure AC connection to Seatel Antenna heater and Blue Deck Lan Equipment Rack #2 is proven operational.

4.2.5 Certification N/A

PART 5: DELIVERABLES

5.1 Drawings/Reports

5.1.1 The Contractor must provide the Chief Engineer a report of the contractor's work in both electronic and hardcopy formats outlining the details of the inspections and any alterations/repairs prior to the acceptance of this item.

Spec item #: L-04	**SPECIFICATION**	TCMSB Field #: N/A
Unit Heater Replacement		

Part 1: SCOPE:

1.1 The intent of this specification shall be to replace the nine 10KW, seven 5KW and two 30KW forced air unit heaters with new heaters of the same capacity.

1.2 This work shall be carried out in Conjunction with the following:

Part 2: REFERENCES:

2.1 Guidance Drawings/Nameplate Data

2.1.1. Existing 5KW Heaters

- Size: 12”H x 18”W x 12 3/4”D
- Stern Thruster Compartment – Feed P463-5
- Steering Gear Compartment – Feed P463-4
- Frame 27 By FW Tank – Feed P463-6
- Emergency Generator Compartment – Feed P415-2
- Stbd. Winch Room Fwd. – P469-6
- Port Winch Room Void Over Freezer Unit – Feed P469-6
- Port Aft Winch Room – Feed P469-8

2.1.2. Existing 10KW Heaters

- Size: 12”H x 18”W x 16”D
- Bubbler Compartment – Feed P413-4
- Lower Fwd. Auxiliary Mach Compartment – Feed P413-3
- Engine Room Lower Fwd. Port - Feed P413-1
- Engine Room Lower Fwd. Stbd. - Feed P413-2
- Engine Room Lower Aft Port - Feed P463-1
- Engine Room Lower Aft Stbd. – Feed P463-2
- Lower Aft Auxiliary Mach Compartment – Feed P463-3
- Mud Room Upper Port – Feed P465-Main Swbd. Section 2
- Mud Room Upper Stbd. – Feed P 465-Main Swbd. Section 2

2.1.3. Existing 30 KW Heaters

- Size 24”W x 22”D x 19”H
- Port Winch Room – Feed P415-1
- Stbd Winch Room – Feed P415-10

2.1.4. New 5 KW &10 KW Heaters

- Size: 12 1/8”H x 16 ½”W x 17”D
- Quellet: Product # OASU05034 & OASU10034

2.1.5. New 30 KW Heaters

- Size: 17 ½”H x 21 7/8”W x 22 ½”D
- Quellet: Product # OASU30034

2.1.6. General Arrangement, Main Deck & Profile # 00-00-06
2.1.7. Machinery Arrangement # 60-00-01
2.1.8. Ouellet OAS Unit Heater Installation and Instruction Manual
2.1.9. Machinery Space Unit Heat Seats # 15-00-124

2.2 Standards

2.2.1. The following Coast Guard Standards and or Technical Bulletins must be adhered to in the course of executing this specification. Copies of these standards and bulletins can be obtained from the CCG Technical Authority.
2.2.2. Canadian Coast Guard Fleet Safety Manual (DFO 5737)
2.2.3. Coast Guard ISM Confined Space Entry 7.D.9
2.2.4. Coast Guard ISM Hotwork procedures
2.2.5. Coast Guard ISM Fall Protection procedures
2.2.6. Canadian Coast Guard Welding Specifications for Ferrous Materials, Revision 4. (TP6151 E)
2.2.7. CWB CSA 47.1 latest revision Division I, II or III
2.2.8. SSPC-SPT

2.3 Regulations

2.3.1. TP 127E Ships Electrical Standards

2.4 Owner Furnished Equipment

2.4.1. The contractor shall supply all materials, equipment, and parts required to perform the specified work unless otherwise stated.
2.4.2. Canadian Coast Guard will supply the new heaters.

Part 3: TECHNICAL DESCRIPTION:

3.1 General

3.1.1. All power sources shall be isolated and locked out.
3.1.2. Cables shall be disconnected from each heater and set aside.
3.1.3. The 5 and 10 KW heaters shall be removed from their mounting arrangement and discarded. The 5 and 10 KW heater mounts are from a bulkhead or deckhead to form a flat surface; the heaters are bottom mounted on the brackets.

3.1.4. The 30 KW heaters shall be removed from the suspended brackets and discarded. These heaters are supported top and bottom from horizontal brackets extending from the bulkheads. The vertical height of these mounts shall be modified to suit the new heaters.

3.1.5. The existing mounts for the 5 KW heaters shall be fitted with flat bar extension to allow for the larger depth of the new heaters. Flat bar 4 inches W x 20"length x ¼" Wall shall be welded to the existing brackets.

3.1.6. Mounting holes shall be drilled in the bottom of the heaters at the front and back to secure to the existing mounts. The bolt-hole pattern shall match the existing holes in the mounts. New holes shall be drilled in the extensions for the 5 KW heaters.

3.1.7. The cables shall be reconnected to the heaters. New glands shall be used where the cables penetrate the unit heaters. Cables that are too short to reach the new heaters shall be replaced back to the isolation switches. Contractor shall quote on replacing 10 meters of cable for 10 KW heaters and include unit cost per meter of cable replacement. This shall be adjusted by 1379. Cable shall be #12 / 4C marine cable. Contractor shall quote on replacing 10 meters of cable for 5 KW heaters and include unit cost per meter of cable replacement. This shall be adjusted by 1379. Cable shall be #14 / 4C marine cable.

3.1.8.

3.4 Location

3.2.1. Bubbler Compartment Aft Bulkhead Frame 123 Center
3.2.2. Lower Forward Auxiliary Mach, Compt. Frame 112 Starboard
3.2.3. Lower Forward Engine Room Frame 96 Port and Starboard
3.2.4. Lower Aft Engine Room Frame 60 Port and Starboard
3.2.5. Lower Aft Auxiliary Mach. Compt. Frame 48 Port
3.2.6. Mud Room Upper Frame 48 Port and Starboard
3.2.7. Stern Thruster Compt. Frame 33 Starboard
3.2.8. Freshwater Tank Alleyway Frame 27 Starboard
3.2.9. Steering Gear Compt. Frame 7 Center, Above Hydraulic Tank
3.2.10. Emergency Generator Compt. Frame 75 Starboard
3.2.11. Winch Room Port and Starboard, Aft and Forward Frame 75-113

3.5 Interferences

3.3.1 Contractor is responsible for the identification of interference items, their temporary removal, storage and refitting to vessel.

Part 4: PROOF OF PERFORMANCE:

4.1 Inspection

4.1.1. All work shall be completed to the satisfaction of the Chief Engineer, Electrical Officer.

4.2 Testing

4.3 Certification
N/A

Part 5: DELIVERABLES:

5.1 Drawings/Reports

5.1.1 The Contractor shall provide 3 copies in electronic format of all work performed with this spec item.

5.2 Spares
N/A

5.3 Training
N/A

5.4 Manuals
N/A

Spec item #: L-05	**SPECIFICATION**	TCMSB Field #: N/A
TEP BATTERY CHARGER REPLACEMENT		

Part 1: SCOPE:

1.1 The intent of this specification shall be to replace the radiator assembly for the Emergency Generator. The contractor shall obtain the services of Toromont Caterpillar to perform the work.

1.2 This work shall be carried out in Conjunction with the following:

Part 2: REFERENCES:

2.1 Guidance Drawings/Nameplate Data

2.1.1. Caterpillar SIS Radiator Group 8N4880
2.1.2. Emergency Generator Room General Arrangement & Composite Arrangement 60-01-01 Sheet 1&2
2.1.3. Radiator Size: 57”H x 50”W x 13.75”D

2.2 Standards

2.2.1. The following Coast Guard Standards and or Technical Bulletins must be adhered to in the course of executing this specification. Copies of these standards and bulletins can be obtained from the CCG Technical Authority.
2.2.2. Canadian Coast Guard Fleet Safety Manual (DFO 5737)
2.2.3. Coast Guard ISM Confined Space Entry 7.D.9
2.2.4. Coast Guard ISM Hotwork procedures
2.2.5. Coast Guard ISM Fall Protection procedures
2.2.6. Canadian Coast Guard Welding Specifications for Ferrous Materials, Revision 4. (TP6151 E)
2.2.7. CWB CSA 47.1 latest revision Division I, II or III
2.2.8. SSPC-SPT

2.3 Regulations

2.3.1. Marine Machinery Regulations.

2.4 Owner Furnished Equipment

2.4.1. The contractor shall supply all materials, equipment, and parts required to perform the specified work unless otherwise stated.

2.4.2. Coast Guard will supply all parts for the radiator replacement.

Part 3: TECHNICAL DESCRIPTION:

3.1 General

3.1.1. The engine coolant shall be drained and discarded. Hoses connected to the radiator shall be removed and stored for reuse. The flexible transition duct between the radiator and plenum shall be removed and laid aside for reuse.

3.1.2. The fan guard and fan assembly shall be removed and laid aside for reuse. The upper radiator supports shall be disconnected and laid aside for reuse. The drive belt pulley at the crankshaft may have to be removed to allow removal of the radiator assembly. The radiator shall be disconnected from the bottom seats and the radiator removed from the space.

3.1.3. The new radiator assembly shall be installed on the radiator seats of the emergency generator and fastened with new fasteners. The fan assembly, drive belts, and fan guard shall be reinstalled. New CCG supplied drive belts shall be used for reassembly. Hoses and flange adapters shall be reconnected. Flexible transition duct shall be reinstalled. All supports shall be reconnected.

3.1.4. The engine and radiator shall be refilled with coolant and coolant treatment.

3.2 Location

3.2.1. Main Deck, starboard side of winch room. Frame 75-87

3.3 Interferences

3.3.1 Contractor is responsible for the identification of interference items, their temporary removal, storage and refitting to vessel.

Part 4: PROOF OF PERFORMANCE:

4.1 Inspection

4.1.1. All work shall be completed to the satisfaction of the Chief Engineer.

4.2 Testing

Engine shall be started and placed on load to check operation parameters with respect to cooling.

4.3 Certification

N/A

Part 5: DELIVERABLES:

5.1 Drawings/Reports

5.1.1 The Contractor shall provide 3 copies in electronic format of all work performed with this spec item.

5.2 Spares

N/A

5.3 Training

N/A

5.4 Manuals

N/A

Spec item #: L-06	**SPECIFICATION**	TCMSB Field #: N/A
ABSOLYTE BATTERY REPLACEMENT		

Part 1: SCOPE:

1.1 The intent of this specification shall be to replace the three battery banks located in the Battery Locker. Batteries are used for TEP Inverter, Automation System, and General Alarm System.

1.2 This work shall be carried out in Conjunction with the following:

1. General Alarm Battery Charger Replacement
2. Automation Battery Charger Replacement
3. Absolyte Battery Replacement
4. Fuel Tank cleaning and Gas Free

Part 2: REFERENCES:

2.1 Guidance Drawings/Nameplate Data

2.1.1. TEP Inverter Batteries

- Absolyte GP: Model # 60050G07, P/N: M8706005007025AAM
- 60 cells, 10 racks, 6 cells per rack.
- 152 AH, 8 HR to 1.75 Volt/Cell
- System Volts: 125VDC
- Cell Size: 6”H x 2.75”W x 13”D, Horizontal Mounted

2.1.2. Automation Batteries

- Absolyte GP: Model # 12-50G07, P/N: M87012005007025AAM
- 12 cells, 2 racks, 6 cells per rack.
- 152 AH, 8 HR to 1.75 Volt/Cell
- System Volts: 24VDC
- Cell Size: 6”H x 2.75”W x 13”D, Horizontal Mounted

2.1.3. General Alarm Batteries

- Absolyte GP: Model # 12-50G05, P/N: M8701205005012AAL
- 12 cells, 2 racks, 6 cells per rack.
- 104 AH, 8 HR to 1.75 Volt/Cell
- System Volts: 24VDC
- Cell Size: 6”H x 2.75”W x 13”D, Horizontal Mounted

2.1.4. ABSOLYTE GP Batteries – Installation and Operating Manual
2.1.5. Automation System 24 Volt Battery System – 1-07-081-5 Sht. 3
2.1.6. General Alarm System: 1-07-82-7, Sheet 1 & 2
2.1.7. Emergency Switchboard One Line – 1-07-80-5, Rev 10

2.2 Standards

2.2.1. The following Coast Guard Standards and or Technical Bulletins must be adhered to in the course of executing this specification. Copies of these standards and bulletins can be obtained from the CCG Technical Authority.
2.2.2. Canadian Coast Guard Fleet Safety Manual (DFO 5737)
2.2.3. Coast Guard ISM Confined Space Entry 7.D.9
2.2.4. Coast Guard ISM Hotwork procedures
2.2.5. Coast Guard ISM Fall Protection procedures
2.2.6. Canadian Coast Guard Welding Specifications for Ferrous Materials, Revision 4. (TP6151 E)
2.2.7. CWB CSA 47.1 latest revision Division I, II or III
2.2.8. SSPC-SPT

2.3 Regulations

2.3.1.

2.4 Owner Furnished Equipment

2.4.1. The contractor shall supply all materials, equipment, and parts required to perform the specified work unless otherwise stated.
2.4.2. Canadian Coast Guard will supply the new batteries.

Part 3: TECHNICAL DESCRIPTION:

3.1 General

3.1.1. Contractor shall remove the cables from each battery bank and move aside. Cables shall be identified for polarity. Protective plastic covers shall be removed from each rack and set aside for safe storage and reuse.
3.1.2. The flat bar cell links shall be removed and retained for reuse. The cell rack retaining bars for securing the cells shall be removed. Take note of the orientation of the cells and rack retaining bars to ensure the replacement are installed as the existing. The cells are number for purposes of the vessel's maintenance system.
3.1.3. The cells shall be removed from the racks and discarded in a proper manner with regard to environmental regulations.
3.1.4. The TEP Inverter cells and the Automation cells are the same type battery cells, the general alarm cells are slightly different with regard to capacity.
3.1.5. New battery cells shall be installed in the exiting racks and secured with the retaining bars. The cell links shall be reinstalled and secured by tightening to a torque of 11.3 NM.

3.1.6. The cables from the charger and to the inverter shall be connected. Plastic protective shields shall be refitted to the racks.

3.1.7. Commissioning by the FSR shall follow the installation.

3.2 Location

3.2.1. Battery Locker, Main Deck Port Frame 78-81 . Access from Winch Room Port Side.

3.3 Interferences

3.3.1 Contractor is responsible for the identification of interference items, their temporary removal, storage and refitting to vessel.

Part 4: PROOF OF PERFORMANCE:

4.1 Inspection

4.1.1. All work shall be completed to the satisfaction of the Chief Engineer, Electrical Officer.

4.2 Testing

Representative from Reliable Power Systems shall be required following the work to commission the chargers. FSR visit shall be required to commission all 5 chargers and 4 sets of batteries.

Contact: Reliable Power Systems Inc.
1959 Upper Water Street, Suit 1301
Halifax, NS, B3J 3N2
1 800 533-1337
Email: info@reliablepower.ca

4.3 Certification

N/A

Part 5: DELIVERABLES:

5.1 Drawings/Reports

5.1.1 The Contractor shall supply 3 copies in electronic format of all work completed with this spec item.

5.2 Spares

N/A

5.3 Training

N/A

5.4 Manuals

N/A

Spec item #: L-07	**SPECIFICATION**	TCMSB Field #: N/A
AUTOMATION BATTERY CHARGER REPLACEMENT		

Part 1: SCOPE:

1.1 The intent of this specification shall be to replace the two existing battery chargers with two new chargers. The new chargers are slightly larger than the existing and require a new mount arrangement for both new chargers.

1.2 This work shall be carried out in Conjunction with the following:

1. TEP Battery Charger Replacement
2. General Alarm Battery Charger Replacement
3. Absolyte Battery Replacement

Part 2: REFERENCES:

2.1 Guidance Drawings/Nameplate Data

2.1.1. Existing Chargers (2 of)
- Size: 27”H x 16”W x 14”D
- NIFE: Input 120V, 20.1A, Output 32.4V, 38.5A Wall Mount
- Power Sources: EP – 105 and P-102-18

2.1.2. New Chargers (2 of)
- Size: 24”H x 24”W x 12”D
- C-Can: Input 120VAC, Output 24VDC 35A Wall Mount

2.1.3. Automation System 24 Volt Battery System – 1-07-081-5 Sht. 3
2.1.4. Emergency Switchboard One Line – 1-07-80-5, Rev 10

2.2 Standards

2.2.1. The following Coast Guard Standards and or Technical Bulletins must be adhered to in the course of executing this specification. Copies of these standards and bulletins can be obtained from the CCG Technical Authority.
2.2.2. Canadian Coast Guard Fleet Safety Manual (DFO 5737)
2.2.3. Coast Guard ISM Confined Space Entry 7.D.9
2.2.4. Coast Guard ISM Hotwork procedures
2.2.5. Coast Guard ISM Fall Protection procedures
2.2.6. Canadian Coast Guard Welding Specifications for Ferrous Materials, Revision 4. (TP6151 E)
2.2.7. CWB CSA 47.1 latest revision Division I, II or III
2.2.8. SSPC-SPT

2.3 Regulations

2.3.1.

2.1 Owner Furnished Equipment

2.4.1. The contractor shall supply all materials, equipment, and parts required to perform the specified work unless otherwise stated.

2.4.2. Canadian Coast Guard will supply the new chargers.

Part 3: TECHNICAL DESCRIPTION:

3.1 General

3.1.1. All external cable wires shall be disconnected from the two existing chargers located on the forward bulkhead of the Deck Machinery Control Room. Wires shall be identified and marked for correct reconnection. The chargers shall be removed from the bulkhead and placed in the winch room.

3.1.2. The two new chargers will not fit to the existing location; hence one charger will be located in a different location. Four mounting brackets shall be fabricated and formed in a manner to provide stand offs to avoid existing cable runs. Brackets shall be 4 inch wide flat bar steel x 3/8 inch wall thickness, length to be determined during installation to suit new chargers and existing structure. The ends of the brackets shall be bent to form a "C" formation. Brackets shall be welded to existing structure.

3.1.3. One charger shall be located on the forward bulkhead inboard adjacent to Tow Winch control cabinet. The other charger shall be located on the ship's side. The chargers shall be located to allow access to the units for maintenance. The expanded metal sheathing and insulation shall be removed from the ship's side IWO new mounting brackets. Two new brackets shall be welded to the ships vertical frames and extend inboard outside the existing sheathing. The new chargers shall be vertically located approximately 80 inches from the deck to the bottom of the chargers. The insulation and sheathing shall be replaced following the install of the new bracket. Insulation shall be sealed with foiled tape.

3.1.4. The new brackets shall be drilled to suit the mounting pattern of the new chargers. Chargers shall be mounted and fastened with mounting hardware.

3.1.5. The existing cables and glands shall be reused and connected as specified by the manufacturer instructions. Each charger is fitted with an input cable, output cable, and a sensor cable for alarm indication.

3.1.6. The lamacoid identification tags on the original chargers shall be removed and installed on the new units. Tags shall be installed with the correct unit and power source.

3.2 Location

3.2.1. Deck Machinery Control Room, Main Deck Port Frame 71-78. Access from Winch Room Port Side.

3.3 Interferences

3.3.1 Contractor is responsible for the identification of interference items, their temporary removal, storage and refitting to vessel.

Part 4: PROOF OF PERFORMANCE:

4.1 Inspection

4.1.1. All work shall be completed to the satisfaction of the Chief Engineer, Electrical Officer.

4.2 Testing

Representative from Reliable Power Systems shall be required following the work to commission the chargers. FSR visit shall be required to commission all 5 chargers and 4 sets of batteries.

Contact: Reliable Power Systems Inc.
1959 Upper Water Street, Suit 1301
Halifax, NS, B3J 3N2
1 800 533-1337
Email: info@reliablepower.ca

4.3 Certification

N/A

Part 5: DELIVERABLES:

5.1 Drawings/Reports

5.1.1 The Contractor shall provide 3 copies in electronic format of all work completed with this spec item.

5.2 Spares N/A

5.3 Training N/A

5.4 Manuals N/A

Spec item #: L-08	**SPECIFICATION**	TCMSB Field #: N/A
GENERAL ALARM BATTERY CHARGER REPLACEMENT		

Part 1: SCOPE:

1.1 The intent of this specification shall be to replace the existing battery charger with a new charger. The new charger is slightly larger than the existing and requires a new mount arrangement for the new charger.

1.2 This work shall be carried out in Conjunction with the following:

1. TEP Battery Charger Replacement
2. Automation Battery Charger Replacement
3. Absolyte Battery Replacement
4. Fuel Tank cleaning and Gas Free

Part 2: REFERENCES:

2.1 Guidance Drawings/Nameplate Data

2.1.1. Existing Charger

- Size: 19”H x 16”W x 11”D
- NIFE: Input 120V, 3.3A, Output 32.4V, 6.6A Wall Mount
- Power Source: EP – 102

2.1.2. New Charger

- Size: 20”H x 20”W x 12”D
- C-Can: Input 120VAC, Output 24VDC 10A Wall Mount

2.1.3. General Alarm System: 1-07-82-7, Sheet 1 & 2

2.1.4. Emergency Switchboard One Line – 1-07-80-5, Rev 10

2.2 Standards

2.2.1. The following Coast Guard Standards and or Technical Bulletins must be adhered to in the course of executing this specification. Copies of these standards and bulletins can be obtained from the CCG Technical Authority.

2.2.2. Canadian Coast Guard Fleet Safety Manual (DFO 5737)

2.2.3. Coast Guard ISM Confined Space Entry 7.D.9

2.2.4. Coast Guard ISM Hotwork procedures

2.2.5. Coast Guard ISM Fall Protection procedures

2.2.6. Canadian Coast Guard Welding Specifications for Ferrous Materials, Revision 4. (TP6151 E)

2.2.7. CWB CSA 47.1 latest revision Division I, II or III

2.2.8. SSPC-SPT

2.3 Regulations

2.3.1.

2.4 Owner Furnished Equipment

2.4.1. The contractor shall supply all materials, equipment, and parts required to perform the specified work unless otherwise stated.

2.4.2. Canadian Coast Guard will supply the new charger.

Part 3: TECHNICAL DESCRIPTION:

3.1 General

3.1.1. All cable wires shall be disconnected from the existing charger located on the forward bulkhead of the Deck Machinery Control Room. Wires shall be identified and marked for correct reconnection. The charger shall be removed from the bulkhead and placed in the winch room.

3.1.2. The new charger will be installed in the general location as the existing unit. Two mounting brackets shall be fabricated and formed in a manner to provide stand offs to avoid existing cable runs. Brackets shall be 2 inch wide flat bar steel x 1/4 inch wall thickness, length to be determined during installation to suit new charger and existing structure. The ends of the brackets shall be bent to form a "C" formation. Brackets shall be welded to existing structure. Old brackets shall be removed.

3.1.3. The new charger shall be located on the forward bulkhead inboard adjacent to Tow Winch control cabinet and below the automation battery charger. Charger to be fitted close to the above automation charger to allow for the new floor mount TEP charger to be installed. Two new brackets shall be welded to the ships vertical frames.

3.1.4. The new brackets shall be drilled to suit the mounting pattern of the new charger. Chargers shall be mounted and fastened with mounting hardware.

3.1.5. The existing cables and glands shall be reused and connected as specified by the manufacturer instructions. Charger is fitted with an input cable and 2 output cables.

3.1.6. The lamacoid identification tag on the original charger shall be removed and installed on the new unit.

3.2 Location

3.2.1. Deck Machinery Control Room, Main Deck Port Frame 71-78. Access from Winch Room Port Side.

3.3 Interferences

3.3.1 Contractor is responsible for the identification of interference items, their temporary removal, storage and refitting to vessel.

Part 4: PROOF OF PERFORMANCE:

4.1 Inspection

4.1.1. All work shall be completed to the satisfaction of the Chief Engineer, Electrical Officer.

4.2 Testing

Representative from Reliable Power Systems shall be required following the work to commission the chargers. FSR visit shall be required to commission all 5 chargers and 4 sets of batteries.

Contact: Reliable Power Systems Inc.
1959 Upper Water Street, Suit 1301
Halifax, NS, B3J 3N2
1 800 533-1337
Email: info@reliablepower.ca

4.3 Certification

N/A

Part 5: DELIVERABLES:

5.1 Drawings/Reports

5.1.1 The Contractor shall provide 3 copies in electronic format of all work performed with this spec item.

5.2 Spares

N/A

5.3 Training

N/A

5.4 Manuals

N/A

Spec item #: L-09	**SPECIFICATION**	TCMSB Field #: N/A
EMERGENCY GENERATOR BATTERY & BATTERY CHARGER REPLACEMENT		

Part 1: SCOPE:

1.1 The intent of this specification shall be to replace the battery charger and NiCad battery bank with new. The new charger is slightly larger than the existing and requires slight rework to fit in the same location.

1.2 This work shall be carried out in Conjunction with the following:

1. TEP Battery Charger Replacement
2. Automation Battery Charger Replacement
3. Absolyte Battery Replacement
4. General Alarm Battery Charger

Part 2: REFERENCES:

2.1 Guidance Drawings/Nameplate Data

2.1.1. Existing Charger

- Size: 12”H x 17”W x 11”D
- Philtek: Input 120V, 5A, Output 24VDC, 10A Wall Mount
- Power Source: EP – 104

2.1.2. New Charger

- Size: 20”H x 20”W x 12”D
- C-Can: Input 120VAC 1PH, Output 24VDC 10A Wall Mount

2.1.3. Batteries

- SAFT NiCad vented 24 VDC, (ten) 2-cell blocks rated 49 Ah
- P/N: SBH49-2
- Battery Size: 13”H x 3.75”W x 7.5”D (10 of)

2.1.4. Emergency Switchboard One Line – 1-07-80-5, Rev 10

2.1.5. General Arrangement Main Deck and Profile # 00-00-06 Latest Rev.

2.2 Standards

2.2.1. The following Coast Guard Standards and or Technical Bulletins must be adhered to in the course of executing this specification. Copies of these standards and bulletins can be obtained from the CCG Technical Authority.

2.2.2. Canadian Coast Guard Fleet Safety Manual (DFO 5737)

2.2.3. Coast Guard ISM Confined Space Entry 7.D.9

2.2.4. Coast Guard ISM Hotwork procedures
2.2.5. Coast Guard ISM Fall Protection procedures
2.2.6. Canadian Coast Guard Welding Specifications for Ferrous Materials, Revision 4. (TP6151 E)
2.2.7. CWB CSA 47.1 latest revision Division I, II or III
2.2.8. SSPC-SPT

2.3 Regulations

2.3.1. TP 127 E – TC Ships Electrical Standards

2.4 Owner Furnished Equipment

2.4.1. The contractor shall supply all materials, equipment, and parts required to perform the specified work unless otherwise stated.
2.4.2. Canadian Coast Guard will supply the new charger.

Part 3: TECHNICAL DESCRIPTION:

3.1 General

3.1.1. All cable wires shall be disconnected from the existing charger located in the Emergency Generator Compartment, near the aft bulkhead outboard on a steel mounting frame. There are two additional cables connected to the charger for a remote charger in the event of failure. These cables are coiled next to the unit to be disconnected from the charger. Wires shall be identified and marked for correct reconnection. The charger shall be removed from the mounting bracket and placed in the winch room.
3.1.2. The bulkhead insulation and expanded metal sheathing shall be removed from the aft bulkhead IWO charger mounting. The insulation to be removed is 8 inches x 24 inches, insulation/sheathing is 2 inches thick. The exposed insulation from cut out shall be concealed by bending the sheathing in towards the bulkhead. The removal of this is required to fit the new (larger charger) on the existing mount.
3.1.3. The pipe bracket for FM200 discharge pipe shall be moved vertically up to clear the door opening of the new charger. The bracket standoff shall be cut from the bulkhead Frame 76 and re-welded in the new position. The insulation and sheathing in the adjacent FM200 compartment shall be removed IWO pipe bracket welding.
3.1.4. The new charger shall be installed on the existing mount. Holes shall be drilled in the existing mount to match the mounting pattern of the new charger.
3.1.5. The existing input and output cables shall be reconnected to the new charger.

3.1.6. The NiCad battery bank is located in Emergency Generator Compartment, inboard of generator set. Cables shall be disconnected. Plastic protective covers shall be removed for access to the links. The metal bar links connecting the cells shall be removed and laid aside for reuse.

3.1.7. The ten batteries shall be removed and discarded in a proper manner with regard to environmental regulations.

3.1.8. New NiCad Batteries shall be installed in the existing battery shelf. Batteries shall be reconnected with the links and cables. Plastic protective covers shall be reinstalled.

3.1.9. FSR shall be on site before power is restored to the charger or the batteries.

3.2 Location

3.2.1. Emergency Generator Compartment, Main Deck Stbd Frame 76-87. Access from Winch Room Starboard Side.

3.3 Interferences

3.3.1 Contractor is responsible for the identification of interference items, their temporary removal, storage and refitting to vessel.

Part 4: PROOF OF PERFORMANCE:

4.1 Inspection

4.1.1. All work shall be completed to the satisfaction of the Chief Engineer, Electrical Officer.

4.2 Testing

Representative from Reliable Power Systems shall be required following the work to commission the chargers. FSR visit shall be required to commission all 5 chargers and 4 sets of batteries.

Contact: Reliable Power Systems Inc.
1959 Upper Water Street, Suit 1301
Halifax, NS, B3J 3N2
1 800 533-1337
Email: info@reliablepower.ca

4.3 Certification

N/A

Part 5: DELIVERABLES:

5.1 Drawings/Reports

5.1.1 The Contractor shall provide 3 copies in electronic format of all work performed with this spec item.

5.2 Spares

N/A

5.3 Training

N/A

5.4 Manuals

N/A

Spec item #: V-01	**SPECIFICATION**	TCMSB Field #: N/A
Various Condition Survey		

Part 1: SCOPE:

1.1 Contractor to supply and support the services for the following list of companies to carry out condition survey on the listed equipment. Direction will be given by Chief Engineer.

1. **Deck Machinery:**
   MIT Solutions BV
   Minervum 7113
   4817 ZN, Breda, Noord-Brabant Netherlands
   T +31(0)76 579 1100
   F +31 (0) 76 579 1109
   www.MITGROUP.NL
   Info@MITGROUP.NL
   Attn: Mr. Frank Melcherts
2. **Ventilation Systems:**
   Alscott Air Systems Ltd.
   St. John's NL
   22 Sudbury Street
   A1E 2V1
   Tel: 709-351-2192
3. **Incinerator OG 400**
   TeamTec AS
   P.O.Box 203
   N-4902 Tuedestrand
   Norway
   Tel: +47 37 19 98 00
   Email: office@teamtec.no
   CND Contact: Hermont Marine
4. **Oily Water Separator RWO Unit**
   Hermont Marine Inc
   100-19501 Clark Graham
   Baie D'Urfe, Quebec
   Canada, H9X 3T1
   Email: info@hermont.com
   Tel: 514-856-1212

5. **Decks and Bubbler Piping Composite Layer**
   SPS Technology
   Mikail Ridhwan
   Project Controls & Strategy
   Marine Offshore Management
   20-22 Wenlock Road, London,
   N1 7GU , UK
   Mobile +44 (0)7402 658083
   Email ridhwan@marineom.com

6. **3D Scan Bubbler Piping Systems**
   EPCO Services Inc
   136 Crosbie Road
   St. John's NL
   A1B 3K3
   Tel: 709 753-7100
7. **Bow Thruster Installation Survey**
   Poseidon Marine Consultants Ltd
   391 Stavanger Drive
   St. John's NL
   A1A 0A1
   Tel: 709 739-4321
8. **Bubbler Piping Cofferdam Design & RO Seawater Intake Design**
   Allswater Naval Architects & Engineers
   123 Clyde Avenue
   Mount Pearl NL
   Tel: 709 747-9100
9. **Electrical Distribution Panel Survey**
   Electrical Consulting Contractor
10. **Sewage Treatment system Survey**
    Red Fox Enviromental services
    1513 B Chemin Agreable Rd
    Youngsville, LA 70592
    USA
    Office 337-856-3709
    Email : service@redfoxenviro.com
    Brady Duhon 337-789-4359
    Email: brady@redfoxenviro.com

11. **Deck Machinery:**
    ABB Inc
    3700 W Sam Houston Pkwy S
    Houston TX 77042
    Phone +1 713 587 8156 Mobile +1 832 258 9099
    Francis Silva Solutions Manager
    francis.silva@us.abb.com

Part 2: REFERENCES:

2.1 Guidance Drawings/Nameplate Data

2.1.1. Van der Giessen Deck Machinery Manuals
2.1.2. 62-00-01 Diagram Of Machinery Space Ventilation
2.1.3. 62-00-02 SHT 1 Machinery Space Ventilation Engine Room
2.1.4. 62-00-02 SHT 2 Machinery Space Ventilation FWD Auxiliary Machinery Space
2.1.5. 62-00-02 SHT 3 Machinery Space Ventilation Aft Auxiliary Machinery Space
2.1.6. 62-00-02 SHT 4 Machinery Space Ventilation Air Bubbler Compartment Space
2.1.7. 62-00-02 SHT 5 Machinery Space Ventilation Stern Thruster Compartment Space
2.1.8. 27-00-01 WT Manholes & Hatches Standards & Locations
2.1.9. 38-00-01 Ventilation & Air Conditioning Main Deck
2.1.10. 38-00-02 Ventilation and Air Conditioning Raised Focsle Deck
2.1.11. 38-00-03 Ventilation & Air Conditioning A Deck
2.1.12. 38-00-04 Ventilation & Air Conditioning B Deck
2.1.13. 38-00-05 Ventilation & AC Nav Bridge Deck
2.1.14. 38-00-06 Fan Room Plan View
2.1.15. 38-00-07 Natural Ventilation
2.1.16. 38-00-08 Coamings & Dampers & Misc. Details
2.1.17. 38-00-09 Ventilation and Air Conditioning As Fitted
2.1.18. 15-00-134 Galley Exhaust Fan
2.1.19. 70-12-01 Incinerator & Sludge Piping Diagram
2.1.20. 70-12-02 Arrangement Incinerator & Sludge Piping
2.1.21. 07-14-01 Forward Unit 124-stem knuckle
2.1.22. 07-14-02 Forward unit 124_stem
2.1.23. 15-00-38 Air Bubbler Pipe Support
2.1.24. 71-10 -01 Air Bubbler System Diagram
2.1.25. 71-10 -02 Arrangement Of Air Bubbler System Piping OMS
2.1.26. 71-10 -03 Arrangement Of Air Bubbler System Piping IMS
2.1.27. 71-10 -SK15 SHT 1 Air Bubbler System OMS Inboard Port Tee
2.1.28. 71-10 -SK15 SHT 2 Air Bubbler System OMS Outboard Port Tee
2.1.29. 71-10 -SK15 SHT 3 Air Bubbler System OMS Outboard Starboard Tee
2.1.30. 71-10 -SK15 SHT 4 Air Bubbler System OMS Inboard Starboard Tee
2.1.31. 71-10 -SK17 Plan & Elevation starboard Bubbler & Bow Thrust Pipes
2.1.32. 71-10 -SK20 Air Bubbler System Shell Penetrations At 90 deg
2.1.33. 107-80-13 Power Panel P413, P463, P469, P269
2.1.34. 107-80-14 Power Panel P424, P425,
2.1.35. 107-80-15 Power Panel P445, P450, P490,
2.1.36. 107-80-19 Power Panel P102, P103,
2.1.37. 107-80-20 Power Panel P104, P105,
2.1.38. 107-80-21 Power Panel P106
2.1.39. 107-80-22 Power Panel P201, P202, P203, P204
2.1.40. 107-80-23 Power Panel EP101, EP405,
2.1.41. 107-80-25 Power Panel TEP101
2.1.42. 107-85-13 Lighting Distribution Panels L101, L102
2.1.43. 107-85-14 Lighting Distribution Panels L103, L104

2.1.44. 107-85-15 Lighting Distribution Panels L105, L106
2.1.45. 107-85-16 Lighting Distribution Panels L107
2.1.46. 107-85-17 Emergency Lighting Distribution Panels EL101,
2.1.47. 107-85-18 TE Lighting Distribution Panels TEL101, TEL102

2.2 Standards

2.2.1. The following Coast Guard Standards and or Technical Bulletins must be adhered to in the course of executing this specification. Copies of these standards and bulletins can be obtained from the CCG Technical Authority.
2.2.2. Canadian Coast Guard Fleet Safety Manual (DFO 5737)
2.2.3. Coast Guard ISM Confined Space Entry 7.D.9
2.2.4. Coast Guard ISM Fall Protection procedures

2.3 Related Specifications

H – 03 Dock and Sea Trials
HD - 02 Underwater Hull Inspection and Coating
HD - 05 5Year 40 Ton Crane Inspection
HD - 07 Sea Bay Maintenance
HD - 09 Marelco Anodes Anti Fouling/ Anti Corrosion
HD - 10 Cathelco ICCP Hull Protection and Survey
HD-11 Fuel Oil Tanks #2 BD Port and Stbd Cleaning/ Inspection/ Testing
HD-13 Sea Box Maintenance
E-10 Engine Room Ventilation Fan Overhaul Supply
E-11 Engine Room Ventilation Fan Overhaul Exhaust
E - 12 Clean & Pickle Fuel Oil Piping
ED - Port Intermediate Shaft replacement
ED - Port Shafting System Alignment
ED - 03 Steering Pumps & Motors Inspection / Overhaul
ED - 04 Stbd Tailshaft Replacement
ED - 05 Stbd Shafting System Alignment
XX-00 ABS Survey

2.4 Regulations

2.5 Owner Furnished Equipment

2.4.1. The contractor shall supply all materials, equipment, and parts required to perform the specified work unless otherwise stated.

Part 3: TECHNICAL DESCRIPTION:

3.1 General

3.1.1. Note due to COVID all contractors outside Atlantic Canada bubble has to have a 14 day isolation prior to starting work. Contractor will have to take this in to considerations when scheduling work for FSR outside this area.

3.1.2. Contractor shall provide gas free certificates and confined space permits for FSR's entering confined spaces. Tank watches and rescue equipment shall be provided while FSR's are inside the spaces.

3.1.3. Contractor shall open and close manholes and access covers from the following spaces. The covers shall be replaced with neoprene rubber gaskets ¼" thick. Contractor to cut out the center gasket material that isn't in contact with sealing surface. All other space covers are specified in other spec items.

- Air Bubbler Intake Housing
- Engine Room Supply Air Trunk Below Fans- Winch Room P&S
- Aft Machinery Space Vent Housing _ Main Deck

3.1.4. MIT Solutions BV shall supply 2 FSR to survey deck equipment (Tow Winch, Tow Winch Tensioner, Anchor Handing Winch, Capstans, Tugger Winch and Storage Reel). Allowance $100K. Contractor shall provide 120 hours for the use of Millwrights to assist the FSR's for their inspections. Inspections require opening gearbox covers, releasing brake bands, open random brake cylinders, inspect drum shaft bearings, inspect guide-on arrangements, and not limited this. All disturbed equipment shall be reassembled as originally found. Note due to COVID and the 14 days isolation we only want them to make one trip. We need contractor to schedule the 2 FSR's toward the end of refit because they will require 2 days for sea trials to survey equipment during operating conditions. For this one MIT will need 2 FSR for approximately 8 days. Contractor to confirm amount of time with MIT for scheduling.

3.1.5. ALSCOTT AIR SYSTEMS shall survey Norris Warming ventilation systems and fire dampers. The condition of all trunking shall be inspected for corrosion and debris. Contractor shall remove louvers from each system to access the internals of the trunking. Refer to referenced drawings for the location and number of louvers. Allowance $15K. The following are the systems to be addressed:

- Main Engine Room Ventilation Supply and Exhaust
- Forward Auxiliary Machinery Space Supply and Exhaust
- Air Bubbler Compartment Ventilation Supply and Exhaust
- Aft Auxiliary Machinery Space Ventilation Supply and Exhaust
- Mud Room Natural Ventilation Port and Starboard
- Sternthruster Ventilation Supply
- Steering Gear Compartment Natural Ventilation, survey option for forced air to provide improved ventilation
- Inverter Room Ventilation Exhaust
- Incinerator Room Ventilation Natural
- Galley Ventilation Exhaust
- Hospital Ventilation Exhaust
- Electronics Room Ventilation

- Wheelhouse Ventilation AHU
- Washroom Exhaust Ventilation
- Natural Ventilation
- Accommodation HVAC

3.1.6. TeamTec shall survey Incinerator System. Allowance $43K. Replacement of incinerator, review option of removal/installation. Review options for bilge water burning tank. Replacement of Flue Gas Exhaust System.

3.1.7. Hermont Marine to survey Oily Water Separator system in conjunction with incinerator. Allowance $40K. Survey options for a prefilter system in conjunction with existing RWO OWS to allow the unit to function.

3.1.8. SPS Technology to review the options for a composite material sandwich system to be fitted to bubbler piping and steel deck areas. Allowance $48K.

- Bubbler piping located in #3&4 Wing Fuel Tank P&S.
- Review deck areas for # 1 Wing Water Ballast Tanks P&S. Deck area in Bubbler Compartment extending approximately1-meter inboard from #1 WB Tanks P&S. Frame 123-144. Review deck area on Main Deck from Frame 71(Aft Bhd of Winch Room) to Frame 60, extend 6.5 meters each side of centerline.

3.1.9. The Contractor to supply the services of EPCO to scan bubbler piping as stated. Allowance $10K.

1. The Contractor must 3D scan 3 & 4 wing tank port and starboard, Sea Box P & S, FWD Auxiliary Machinery and engine room P & S compartments with a terrestrial laser scanner.
2. The Contractor must capture all the piping and pipe components related to the bubbler system in 3 & 4 wing tank port and starboard, Sea Box P & S, FWD Auxiliary Machinery and engine room P & S compartments.
3. The Contractor must capture the location of piping penetrations through bulkheads with an added level of detail than the rest of the piping.
4. The Contractor must create a “tie in point” in the scans for all pipe penetrations.
5. The Contractor must scan with a terrestrial laser scanner that has a minimum a range accuracy of ± 1mm at 10m.
6. The 3D scan model must contain 360deg photographic images at each scan location to allow for “bubble view” visualization.
7. The Contractor must deliver the 3D scan registered point cloud in a format compatible with “bubble views”.
8. The Contractor must deliver the 3D scan of each 3 & 4 wing tank port and starboard, Sea Box P & S, FWD Auxiliary Machinery and engine room P & S compartments scanned as a registered point cloud in a structured e57 file format.
9. The Contractor must merge the 3D scans of each 3 & 4 wing tank port and starboard, Sea Box P & S, FWD Auxiliary Machinery and engine room P & S compartments with the first set of scans for the Terry Fox bubbler system (Bubbler compartment, Deep Tank, Wing tank # 2 port and starboard) in order to deliver one fully registered point cloud of the entire system.

10. The Canadian Coast Guard can supply the 3D scans of the Bubbler Compartment, Deep tank, and Wing tank #2 port and starboard if necessary.

For consulting questions please contact Lina Sofia Garcia-Villaveces, LinaSofia.Garcia-Villaveces@dfo-mpo.gc.ca phone number 613-617-5464.

3.1.10. Poseidon Marine Consultants shall site visit for new Bow Thruster installation review. They shall require entry into the Center Deep Tank Frame 123-144. Review deckhead area frame 113-123 at Forecastle Deck Level for conversion to storage area. Access panels shall be removed aft and forward of stairway landing leading from main deck to raised Forecastle Deck. Allowance $500.00

3.1.11. Contractor allowance 15K to supply Electrical contractor to survey all electrical panels throughout vessel. Do up a detailed scope of work with 2 options. First one to refurbish, secondly to replace with new panels and the scope of work required to change them out. Wire lengths shall remain as is. There are 42 existing panels (Canadian General Electric Type: ANLB-LC). The vessel's electrical Officer will provide an updated list of panels and circuits. Three new panels shall be added as indicated below.

i. One 120Volt panel to be located in the Upper Aft Machinery Compartment (comp. flat) on Forward bulkhead starboard of the CL between vertical deep stiffener and Cathelco Panel.
Feed From: Main Switchboard, Section 12, 120 Volt Section, Spare Circuit S-1101, 100AF / 100AT.

ii. Second one 220Volt panel to be located in Main Engine Room Flat outside MCR, port of CL, Frame 70, Next to P-463 Panel.
Feed From: Main Switchboard, Section 4, 220 Volt Section, Spare Circuit S-402, 100AF / 50AT (Breaker/Trip will have to be changed).

iii. Third one 120Volt panel to be located in the Electronics workshop on B Deck, Forward bulkhead under Panel EP 405.
Feed From: Emergency Switchboard, Section 21, 120 Volt Section, Spare Circuit S-111, 100AF / 50AT.

42 Panels

Panel #	**Voltage**	**Location**
EP 101	120	Wheel house
L 101	120	Wheel house
L 102	120	Electronics room
L 103	120	"A" deck aft
L 104	120	Fore castle deck aft
L 105	120	Laundry room
L 106	120	Upper main engine room fwd
L 107	120	Bulk cargo room fwd
EL 101	120	Fore castle deck aft
TEL 101	120	Fore castle deck aft
TEP 101	120	Wheel house
TEP 102	120	Emergency gen. Room

P 102	120	MCR
P 103	120	MCR
P 104	120	Galley
P 105	120	Mess room
P 106	120	Electronics room
S-110-1	120	Emergency gen. Room
P 201	220	Galley
P 202	220	Galley
P 203	220	Wheel house
P 204	220	MCR
P 212	220	Fore castle deck aft
P 214	220	Electronics room
P 262A	220	Electronics room
P 262B	220	Electronics room
P 269	230	Laundry room
EP 405	460	Electronics room
P 413	460	Lower main engine room stb
P 415	460	Emergency gen. Room
P 418	460	Mud room
P 424	460	Generator flat fwd
P 425	460	Emergency gen. Room
P 443-19	460	Lower main engine room stb
P 445	460	Lower main engine room stb fwd
P 450	460	MCR
P 463	460	Catwalk up main engine room port aft
P 469	460	Emergency gen. Room
P 490	460	Engineers work shop

3.1.12. Allswater Naval Architects & Engineers shall site visit for the option of installing a cofferdam system for Bubbler piping in # 3&4 Wing Fuel Oil Tanks P&S. Survey and design options for an independent Reverse Osmosis sea suction intake compartment and piping to existing pumps. $2K allowance.

3.1.13. ABB Inc shall carry out survey on current condition of existing motors, controls for Tow Winch, Anchor Handling Winch, 2 Capstans and Jogging Winch and Storage Reel. Allowance $33K.

3.1.14. Contractor shall provide the results of the testing in a service written and electronic PDF report format with three copies of each presented to the Chief Engineer.

3.1.15. The Contractor to carry out lead survey 20 locations on plating: hull below water line, above water line, Main deck, Forecastle, A Deck , Navigation Bridge Deck, Wheelhouse Top Deck and Fan Room Top Deck-WH Top. The area location of each individual sample is to be noted frame number and distance from a reference point so that it is easy to identify.

3.1.16. All work shall be completed to the satisfaction of the Chief Engineer and the attending ABS Surveyor.

3.2 Location

3.2.1. Winch Room Main Deck
3.2.2. Main Deck Aft
3.2.3. Raised Forecastle Deck
3.2.4. Forecastle Deck
3.2.5. Steering Gear Compartment
3.2.6. Engine Room and Stack Casings
3.2.7. Engine Room Supply Air Plenum-Access Winch Room & Aft WH "C" Deck
3.2.8. Stern Thruster Compartment
3.2.9. Inverter Room (Deck Machinery Control Room)
3.2.10. Incinerator Room off Winch Room
3.2.11. Galley-Main deck
3.2.12. Air Bubbler Vent House – Forecastle Deck
3.2.13. Fan Room – Raised Focsle Deck
3.2.14. Fan Room - Wheelhouse Top
3.2.15. "A" Deck Exterior – Dunnage Deck
3.2.16. #3 P&S Fuel Oil Wing Tank Frame 60-99
3.2.17. #4 P&S Fuel Oil Wing Tanks Frame 48-60

3.3 Interferences

3.3.1 Contractor is responsible for the identification of interference items, their temporary removal, storage and refitting to vessel.

Part 4: PROOF OF PERFORMANCE:

4.1 Inspection

a. 100% visual By Chief Engineer, ABS Surveyor.

All work shall be completed to the satisfaction of the Chief Engineer.

4.2 Testing

a. Carried out by a certify NDT specialized.

4.3 Certification

a. ABS Certificate company to carry out the ultrasonic testing.

Part 5: DELIVERABLES:

5.1 Drawings/Reports

5.1.1 Three hard and 3 PDF electronic copies of refit reports of all items carried out in this refit specification will be supplied to Chief Engineer.

5.2 Spares N/A
5.3 Training N/A
5.4 Manuals N/A

Spec item #: V-02	**SPECIFICATION**	TCMSB Field #: N/A
ABS Special Condition Survey		

Part 1: SCOPE:

1.1 Contractor to supply and support the services of an ABS approved firm to perform Non-destructive testing on vessels steel structure and piping systems. Testing shall be done to the satisfaction of ABS Surveyor.

1.2 ABS Special Surveyor will be checking the condition of the steel as well as the coating throughout the vessel: Hull, tanks, voids, ventilation plenums various spaces and some superstructure.

Part 2: REFERENCES:

2.1 Guidance Drawings/Nameplate Data

2.1.1. Drawings

a. Shell Expansion "As Fitted" 07-00-01
b. Tank Capacity Plan T13-1027 Rev 8, 00-00-14
c. Docking Plan 00-00-08
d. Tank Testing Plan 16-00-04
e. General Arrangement:
   A. Profile & Main Deck # T13-1051-001
   B. Main Deck & Forecastle Deck T13-1051-002
   C. A&B Decks Accommodation T13-1051-003
   D. Navigation Bridge & Wheelhouse Arrangement 00-00-05

Structure Drawings:

f. Single Bottom Frame 24-27 P&S, #07-07-01 /02
g. Double Bottom Frame 48-59 Center, # 07-07-03
h. Double Bottom Frame 60-79 P&S, #07-07-04/05
i. Double Bottom Frame 80-99 P&S, # 07-07-06/07
j. Double Bottom Frame 100-123 P&S, # 07-07-08/09
k. Side Unit L&U Frame 24-42 P&S, # 07-08-01/02
l. Side Unit L&U Frame 43-59 P&S, # 07-08-03/04
m. Side Unit L&U Frame 60-79 P&S, # 07-08-05/06
n. Side Unit L&U Frame 80-99 P&S, # 07-08-07/08
o. Side Unit L&U Frame 100-123 P&S, # 07-08-09/10
p. Machinery & O.T. Flats, # 07-10-01/07
q. Main Deck, # 07-10-08/13
r. Longitudinal BHDS Frame 27-144, # 07-11-01/06
s. W.T. BHDS Frame 27, # 07-11-07
t. W.T. BHDS Frame 33, # 07-11-08
u. W.T. BHDS Frame 48, # 07-11-09
v. W.T. BHDS Frame 60, # 07-11-10

w. W.T. BHDS Frame 99, # 07-11-12
x. W.T. BHDS Frame 123, # 07-11-13
y. W.T. BHDS Frame 144 – Chain Locker, # 07-11-14/15/16
z. Aft Unit Frame C-8 P&S, # 07-12-03/04
aa. Aft Unit Frame 8-23 P&S & Longitudinal BHD, # 07-12-05/06
bb. Aft Unit Frame 8-23 Center, # 07-12-07
cc. FWD Unit L&C Frame 124-Stem, # 07-14-01
dd. FWD Unit U&C Frame 124-Stem, # 07-14-02
ee. FWD Unit Frame 124-149 P&S, # 07-14-03/04
ff. FWD Unit Frame 150-Stem P&S, # 07-14-05/06
gg. FOCSLE Deck Frame 158-Stem P&S, # 07-14-07
hh. FOCSLE Deck Frame 150-157 P&S, # 07-14-08/09
ii. FOCSLE Deck Frame 121-149 P&S, # 07-14-10/11
jj. FOCSLE Deck Frame 101-120 P&S, # 07-14-12/13
kk. FOCSLE Deck Frame 71-100 P&S, # 07-14-14/15
ll. Main Mast & Layout of Wheelhouse Top, # 29-00-01
mm. 'A' Deck # 20-00-02
nn. 'C' Deck # 20-00-04
oo. Window & Sidelight Schedule # 28-00-01
pp. Deck Sheathing Main Deck # 35-00-02

Piping System Drawings:
qq. Fire & Washdeck Arrangement in Accommodations # 70-02-02 Sheet 1
rr. Fire & Washdeck Arrangement # 70-02-02 Sheet 2
ss. Arrangement Bilge & Ballast & Oily Bilge Systems
    a. Machinery Space - Plan # 70-04-02 Sheet 1
    b. Machinery Space Elevations & Sections #70-04-02 Sheet 2
    c. Forward Aux Machinery Space #70-04-02 Sheet 3
    d. Aft of BHD 48 & Forepeak of BHD 123 #70-04-02 Sheet 4
tt. Arrangement of Air Vents & Soundings
    A. Aft Of Frame 48 # 70-07-02 Sheet 1
    B. Between Bhds Frame 48-99 # 70-07-02 Sheet 2
    C. Between Frame 99 Forward # 70-07-02 Sheet 3
uu. Fuel Oil Filling & Transfer # 71-04-03 Sheet 1&2&3
vv. Arrangement of Weather Deck Scuppers and Drains # 70-10-01 Sheet 1&2
ww. Arrangement of Scupper in Winch Compartment #70-10-01 Sheet 3
xx. Arrgt. of Drains in Gen. Compt., Control Rms. ER Flats # 70-10-01 Sheet 4
yy. Arrangement of SW Circ. System #71-01-02
zz. Arrangement of Overboard Discharges # 71-01-09

Ventilation Drawings:
aaa. 62-00-01 Diagram Of Machinery Space Ventilation
bbb. 62-00-02 SHT 1 Machinery Space Ventilation Engine Room
ccc. 62-00-02 SHT 3 Machinery Space Ventilation_ Aft Auxiliary Machinery Space
ddd. 62-00-02 SHT 4 Machinery Space Ventilation_ Air Bubbler Compt Space

2.1.2.

Table #1			
Tank Name	**Frame Location**	**Volume M^3**	
Freshwater tank Centre	9 - 25	41.95	
#6 Potable freshwater tank	9 - 27	107.31	
#1 Ballast Wing Tank, P	123-144	97.92	Bubbler Compt.
#1 Ballast Wing Tank, S	123-144	97.92	Bubbler Compt.
Aft Peak W. B. Tank, P	3-9	71.87	Steering Flat
Aft Peak W. B. Tank, S	3-9	72.44	Steering Flat
#3 D.B. Tank, P	48-60	55.22	L.O. Purifier Flat
#3 D.B. Tank, S	48-60	55.22	L.O. Purifier Flat
#2 Wing W.B Tank, P	105-123	186.60	Generator Flat
#2 Wing W. B. Tank S	105-123	186.60	Generator Flat
Deep W. B. Tank	123-144	239.36	Bubbler Compt.
Forepeak Tank	150 - stem	457.5	
#7 Wing F.O. Tank Port	9 - 27	170.16	
#7 Wing F.O. Tank Stbd	9 - 27	171.22	
#6 Wing F.O. Tank Port	27 - 33	65.74	
#6 Wing F.O. Tank Stbd	27 - 33	66.37	
#5 Wing F.O. Tank Port	33 - 48	100.56	
#5 Wing F.O. Tank Stbd	33 - 48	100.56	
#3 Wing F.O. Tank Port	60 - 99	267.51	
#3 Wing F.O. Tank Stbd	60 - 99	264.88	
#2 D.B. F.O. Tank Port	60 - 94	127.01	
#2 D.B. F.O. Tank Stbd	60 - 94	127.01	
#1 D.B. F.O. Tank Port	105 - 123	71.34	
F.O. Purifier Sludge TK P	107 - 110	8.63	
FWD Void Space	144 - 150		Under & Sides of Chain Locker
Aft Shaft Voids P & S	27 - 33		Mud Room
Void under Thruster compt.	27 - 33		Center Mud RM
Aft Void	Stern - J		Below Main Dk
Sea Box P & S	99 - 105		
Sea Bay	102 - 105		
Sea Bay	99 - 102		

2.2 Standards

2.2.1. The following Coast Guard Standards and or Technical Bulletins must be adhered to in the course of executing this specification. Copies of these standards and bulletins can be obtained from the CCG Technical Authority.

2.2.2. Canadian Coast Guard Fleet Safety Manual (DFO 5737)

2.2.3. Coast Guard ISM Confined Space Entry 7.D.9

2.2.4. Coast Guard ISM Fall Protection procedures

2.3 Related Specifications

H-06 Freshwater Tank Maintenance
H-07 Above Waterline Hull Painting Coating and CCG Identity
HD-01 Drydocking
HD-02 Underwater Hull Inspection and Coating
HD-03 Hull Butts and Seams
HD- 07 Sea Bay Maintenance
HD-11 Fuel Oil Tanks #2 BD Port and Stbd Cleaning/ Inspection/ Testing
HD-13 Sea Box Maintenance
H-xx Various Surveys
E-10 Engine Room Supply Fan Overhaul
E-11 Engine Room Exhaust Fan Overhaul

2.4 Regulations

2.5 Owner Furnished Equipment

2.4.1. The contractor shall supply all materials, equipment, and parts required to perform the specified work unless otherwise stated.

Part 3: TECHNICAL DESCRIPTION:

3.1 General

3.1.1. The Contractor upon completion of hull inspection and cleaning shall arrange the services of qualified NDT Technician to perform ultrasonic shots to test the thickness of steel in various locations (hull, superstructure, water ballast tanks, fuel oil tanks, void spaces, ventilation trunks, and piping).

3.1.2. All Nondestructive steel thickness testing will be done as per ABS Surveyor's directions.

3.1.3. The Contractor to do items listed below the same time spec items section 2.3 above are being done.

3.1.4. The Contractor shall quote on 5000 shots and unit price for adjustment purposes.

3.1.5. The Contractor shall provide the services of a man lift and operator for minimum of 40 hours, with a hourly rate for adjustment, to be completed for hull and superstructure wherever required for ultrasonic NDT.

3.1.6. The Contractor shall quote confined space entry certificate and an attendant contractor to bid on certifying total 33 and per one for adjustment purposes. And tank attendant and assistance for 100 hours and quote per 1 hr for adjustment. Contractor to keep a log of hours per enclosed space. List of tanks that require in Table #1.

3.1.7. The Contractor shall require scaffolding to be provided in the below list.

i. Forepeak
ii. Deep Tank (C)
iii. # 1 WB P&S Wings
iv. # 2 WB P&S Wings
v. Sea Boxes P & S
vi. # 3 FO P&S Wings
vii. # 4 FO P&S Wings
viii. # 6 FO P&S Wings
ix. # 7 FO P&S Wings
x. Engine Room Supply Air Plenum P&S

3.1.8. **Tank Testing Table # 1:** The internal structure and plating shall be UT tested. Special attention shall be given to the following areas:

- The Deep Tank tank-top at the sides where the tank-top plating attaches the shell plating and extend inboard 1.5 meters, frame 123-144 P&S. This area is partly accessible from the bubbler compartment deck and # 1 Wing Water Ballast Tank P&S. Ten shots shall be taken between each frame space from the shell to 1.5 meters inboard. This shall be completed in addition to the tank structure and plating.
- The Aft Machinery Space Ventilation trunking passes down through # 4 Fuel Oil Wing Tank P&S from the main deck into the machinery space P&S. The plating for the vent trunks shall be UT tested at $300mm^2$ intervals. This shall be completed in addition to the tank structure and plating.
- Deck Scupper pipes that extend from exterior decks down through tanks shall be UT tested. 100mm pipe is schedule 120 and 125mm pipe is schedule XXS. See reference drawings for locations.

3.1.9. Coatings: Contractor shall remove coatings IWO test points for all areas directed by the test inspector. The Hull is coated with International Inerta 160, some smaller decks are coated with International Aircraft Carrier coating, remaining is Intelac 665 alkyd. All removed coating for testing shall be reapplied as per CCG paint scheme. Quote on 500 spots for removal and recoating and unit cost for adjustment purposes. Note most of the hull shots will be taken internal from tanks and spaces. Lead content testing for disturbed coatings shall be completed as specified in the Various Survey specification.

3.1.10. Hull: The Contractor to mark off at 3 frame intervals with chalk after hull cleaning this is to allow reference for shell expansion drawing in relation to NDT shots being taken. Using shell expansion drawing including the skeg mark off 5 shots per plate one in each corner and one in the middle this is to be recorded on a full size shell expansion drawing and be given as a deliverable by contractor as well a table transform from this in ABS format.

3.1.11. Ballast Tanks & Voids Cleaning listed in Table #1. A minimum of 110 NDT shots in each ballast tank.

i. Tanks shall be pumped as low as possible by ship's staff. Contractor shall be responsible for pumping out remainder of tank as required to perform this work. Allow 2 cubic meters for ballast tanks and 0.5 cubic meters for void tanks. Quote shall include unit cost per cubic meter and to be adjusted up or down by 1379 for removing and discarding remaining water.

ii. Locations of manhole covers are indicated in drawing. Contractor shall open manhole covers for access for water cleaning and painting purposes. On completion of all work, manhole covers shall be installed using new ¼" cloth reinforced neoprene gaskets (CFM). Contractor to cut out the center gasket material that isn't in contact with sealing surface.

iii. The Contractor prior to entry into each tank, the tank shall be certified safe for entry and hotwork. Contractor shall supply all ventilation and lighting equipment required for the Hot-Work certificates and maintain the equipment for the duration of the work.

iv. The tanks shall be high pressure washed at 3000 psi to remove mud, scale and loose paint. Contractor shall quote on the removal of approximately 2 M^3 of mud and debris per tank. All water and debris shall be removed from the tanks. Contractor shall be advised that there are no docking plugs in the tanks and water accumulated from pressure washing must be pumped out using Contractor supplied equipment. Tank surfaces shall be thoroughly dried. Tank level transducers shall be protected before high pressure washing.

v. Contractor shall all ensure all mud and debris from pressure washing and cleaning is removed from the tanks and the vessel.

vi. Before any tank is closed up, the manhole cover shall be inspected by the Chief Engineer.

3.1.12. Fuel Oil Tanks fuel oil listed in Table #1 A minimum of 110 NDT shots in each Fuel tank. Particular attention shall be made to the underside of tank top, inboard bulkheads of wing tanks, Suction/Filling pipe areas and Transverse bulkhead separating # 6 & # 7 Wing tanks P&S.

i. The Chief Engineer will advise the Contractor which tanks are available for cleaning to allow adequate time for ships staff to transfer fuel. The tanks will be pumped as low as possible.

ii. Contractor shall quote for the removal and disposal of estimated 1 m^3 of oil/sludge residue per tank and an estimated 5 m3 of residue per tank for No 2 DB's (Total of 17 m3). The disposal of all residues from the tanks must be by a licensed waste oil disposal company. The total amount of residue, excluding residue from water washing of tanks, shall be totaled and amount given to Chief Engineer. Contractor shall supply the name of the collection and disposal company to the Chief Engineer. Contractor shall quote unit cost for removal and disposal of 1 m^3 of oil/sludge for PWGSC 1379 adjustment. Contractor shall provide an accurate means of measuring the removed residue through the use of flow meters or tank sounding devices.

iii. Contractor shall gas free and certificates for all tanks listed and shall supply ventilation and lighting equipment required for the Hot-Work certificates and maintain the equipment for the duration of the work. Gas-free/Hot-Work certificates shall be renewed as required.

iv. Contractor shall remove manhole covers for access to tanks and install covers in good order after the final inspection by the Chief Engineer. All dirt and debris found in tanks shall be removed ashore and disposed of by Contractor to an approved location.

v. The tank internals are to be 100 percent high pressure washed at 3000 psi minimum. All water and residue from tank washing shall be pumped ashore and disposed of by Contractor. Tanks shall be thoroughly wiped down with lint-free clean rags and all sludge deposits scraped off and disposed. During the water washing process, contractor will take care not to direct a stream of water at a tank's level transducer. Each level transducer is located at a low point in the tank, usually adjacent to a manhole location. Exact location can be made by following the cable inside the tank. The level transducers must be covered up prior to any water washing of the tank.

vi. Before disinfecting tanks, Chief Engineer to inspect.

vii. Each fuel tank shall be sprayed or wiped (depending on tank access) with a 10 / 90 solution of Javex in water. IMPORTANT – extraction ventilation and employee eye protection will be required during this procedure. Each tank so sprayed shall be allowed to soak 4 to 8 hours.

viii. After tanks have been disinfected, all surfaces shall be wiped dry with lint-free rags. Contractor shall remove protective covers from the level transducers.

ix. After tank cleaning is completed, while gas-free certificate is still valid NDT will take place, after this work is finished CCG personnel will be inspecting tank gauging level sensors in certain tanks. After sensors are inspected, CCG will advise Contractor when tanks can be closed up.

x. Before any tank is closed up, the manhole cover shall be inspected by the Chief Engineer. All tank fasteners shall be wire brushed clean and coated with an approved anti-seize compound.

xi. On completion of all work, manhole covers shall be installed using new ¼" Buna-N gaskets (CFM). Contractor to cut out the center gasket material that isn't in contact with sealing surface.

3.1.13. Superstructure plating six inches vertically up from the deck and six inches away from the vertical exterior shall be randomly tested. Shots shall be taken at 1-meter intervals and areas where corrosion is apparent. The following areas shall be dealt with.

A. Main Deck Frame 70-71 Entire breadth of vessel
B. Focsle Deck Frame 70-71 to Frame 123 P&S
C. Focsle Deck Frame 123 inboard to Bubbler Air Intake House P&S
D. Sides of Bubbler Air Intake House Frame123-128
E. Raised Focsle Deck Frame 81 IWO Fan Room/Paint Locker Aft Bhd.
F. "A" Deck Frame 87 (Dunnage Deck) Aft Bhd.
G. "C" Deck Frame 87-96 Aft Of Wheelhouse Wings
H. "C" Deck Frame 102-123 Forward and Sides of Wheelhouse
I. Wheelhouse Top Frame 89 Aft Bhd. Of Fan Room
J. Wheelhouse Top Frame 96-99 Funnels & Forward Bhd. Fan Room

3.1.14. The Exterior Ventilation Housings for the Bubbler Compartment P&S and Aft Auxiliary Machinery P&S shall be UT tested at 300mm^2 intervals, top and four sides. Bubbler Trunk Housings are Located on the Forecastle Deck Frame 133-135 P&S. Aft Machinery Space Housings are located on the Aft Main Deck Frame 54-57 P&S.

3.1.15. The Engine Room Supply Air Built-in-Trunk P&S shall be UT tested. Shots shall be taken of plating and structure at 1-meter^2 intervals and areas where corrosion is apparent. There are two areas for each side, above the fans and below the fans. The entire plenum extends from the main deck up to "C" deck. The fans are located at "A" Deck Level. The Trunks extend from the ship's side inboard 3.2 meters, Frame 87-90. The lower section of plenum is accessed from the winch room manhole covers and the upper section is accessed from the manhole covers aft of wheelhouse wings on "C" Deck.

3.1.16. Windows and port holes on each deck, including wheelhouse windows and skylight windows shall be UT around the perimeter at the steel structure. Refer to Window and Sidelight Schedule for location and number of. Allow for 5 shots per unit.

3.1.17. All exposed exterior deck plating on the following decks: Main deck plating IWO deck sheathing shall be accessed from the underside where applicable. UT shots shall be taken as per hull plating scheme.

A. Main Deck Frame 71-72 entire breadth, Frame 60-stern outbd of crash rail
B. Forecastle Deck Frame 71-stem
C. Raised Focsle Deck Frame 71-81 IWO Storage Reel
D. A Deck Frame 81-87 (Dunnage Deck)
E. C Deck Frame 87-123 Forward & Aft of Wheelhouse
F. Wheelhouse Top Frame 87-119 Forward and aft of Fan Room
G. Fan Room Top located on WH top Frame 89-99
H. Roller Pocket Frame J-Aft Aft Void Space

3.1.18. Main mast, structure supports, and crossarm arrangement shall be UT. Shots shall be taken at 1-meter intervals and areas where corrosion is visible. The arrangement consists of vertical mast, three stays and structural beams that extend between the funnels. Structural members below the mast are in the fan room. Insulation and sheathing shall be removed to access these members. Refer to drawing Main Mast & Layout of Wheelhouse Top for details.

3.1.19. Piping systems: The piping systems noted below shall be UT for condition-based assessment. **Only piping that is easily accessed shall be tested.** All pipe elbows, pipe branches and pipe-ends adjacent to flanges and Victaulic couplings shall be tested. Straight runs, both vertically and horizontally shall be tested at 1meter intervals and areas where signs of corrosion are visible. All test points shall be tested at four equal distance locations around the pipes. A pipe tunnel that extends from the Main Deck to "A" deck Frame 121-123 Port of Centerline shall be opened up for access to some piping. Access covers are located in the washroom aft of Galley Main Deck and Sauna Room off Raised Foc'sle Deck. Refer to reference drawings for all pipe arrangements to determine size and location. Drawings shall be marked up for the location and test readings noted on drawings.

1. **Emergency fire pump** suction from the suction seabay to pump suction. Pump location is just aft of frame 99 port side lower engine room.
2. **Fire main** extends from three pumps, Emergency Fire, Fire & Bilge, and Fire & General Service. The discharge from the pumps connect to the main run in the winch room, main deck, port side.
3. **Fire monitor** is an independent firefighting system to charge the two fire monitors on the wheelhouse top. The system consists of two fire monitor pumps P&S located adjacent to the P&S inner seaboxes in the Lower Forward Machinery space. Pump suctions are connected to the inner seaboxes by way of strainers and pneumatic valves. Each Fire Monitor is connected by independent pipes from each fire monitor pump with an interconnecting pipe and valve between the pumps. The piping through accommodations is insulated with foam insulation; sections of insulation shall be removed for testing purposes and replaced when completed.

4. **Bilge System** employs three pumps, Fire & Bilge, Bilge & Ballast, and Fire & General Service. Each pump is connected to a manifold system for the bilge main and direct suctions for different areas of the engine room. Pumps have an option to discharge overboard and to the O/B Tank.

5. **Ballast System** employs two pumps, Bilge & Ballast and Fire & General Service, although the Fire & Bilge has a connection to the Ballast Main by manual valve, not noted in the drawings. Both Bilge & Ballast systems are controlled by pneumatic valves.

6. **Fuel Oil Filling & Transfer System** employs three valve manifold arrangements, two transfer pumps, cargo discharge pump, and two flow meters to and from ashore. The pipe system extends from the P&S deck bunker stations, through the flow meter system, to the valve manifolds and to the storage tanks. All valves are manually operated, and relevant tanks are fitted with Q/C valves.

7. **Sea Water Cooling System** employs P&S suction strainers, three seawater pumps and central coolers. Piping extends from the P&S inner seaboxes to the suction seabay. From the suction seabay, piped to the pump suctions to a discharge pipe system for the coolers. A branch pipe for the sterntube cooling system is fitted to the discharge pipe system and extends aft to the lower Mud Room. The coolers discharge to the discharge seabay, seabay discharges to the P&S seaboxes with three branches on each side, one to the outer seabox, one to the inner seabox, and one for the recirculating circuit to the inlet before the strainer. Pneumatic butterfly valves are fitted to the seaboxes for the inlet and discharge pipes.

8. **Vents and Sounding System:** Vent pipes for tanks and voids vent at either the Aft Main Deck or Forecastle Deck exterior. Vents pass through several other tanks, voids and accommodation spaces. Refer to reference drawings for pipe arrangements to determine location and accessibility for survey purposes. Sections of vents and soundings that pass-through accommodation spaces may be accessed by removal of deckhead panels IWO pipes.

9. **Scuppers and Drains:** Scuppers are fitted to all exterior decks from the wheelhouse top to the main deck and either drain to exterior decks or piped to the shell. Winch room scuppers drain to machinery space bilges. Drain pipes pass through compartments, tanks and accommodation spaces. Refer to reference drawings for pipe arrangements to determine location and accessibility for survey purposes. Sections drain pipes that pass-through accommodation spaces may be accessed by removal of deckhead panels IWO pipes. “A” Deck Accommodation Upgrade will allow access to some scupper drains on the port side.

3.1.20. Exposed Superstructure Main Engine Room Stack. The exterior superstructure plating IWO exhaust casing P&S shall be UT for wastage. The area for testing extends from Forecastle Deck Frame 89-99 up to B Deck and from B Deck up to the Funnel Top frame 89-96. Scaffolding or manlift shall be required to complete the testing of this spec item.

3.1.21. Contractor shall provide the results of the testing in a service written and electronic PDF ABS report format with three copies of each presented to the Chief Engineer. Shell expansion and all other referenced drawings shall show the location and measurements taken for each point.

3.1.22. ABS Surveyor and Chief Engineer shall witness testing.

3.1.23. All work shall be completed to the satisfaction of the Chief Engineer and the attending ABS Surveyor.

3.2 Location

3.2.1. Ship's Hull, Decks, Superstructure, Tanks and Voids as per Table #1.

3.3 Interferences

3.3.1 Contractor is responsible for the identification of interference items, their temporary removal, storage and refitting to vessel.

Part 4: PROOF OF PERFORMANCE:

4.1 Inspection

a. 100% visual By Chief Engineer, ABS Surveyor.

All work shall be completed to the satisfaction of the Chief Engineer.

4.2 Testing

a. Carried out by a certify NDT specialized.

4.3 Certification

a. ABS Certificate company to carry out the ultrasonic testing.

Part 5: DELIVERABLES:

5.1 Drawings/Reports

5.1.1 Three hard and 3 PDF electronic copies of refit reports of all items carried out in this refit specification will be supplied to Chief Engineer.

5.2 Spares

N/A

5.3 Training

N/A

5.4 Manuals

N/A