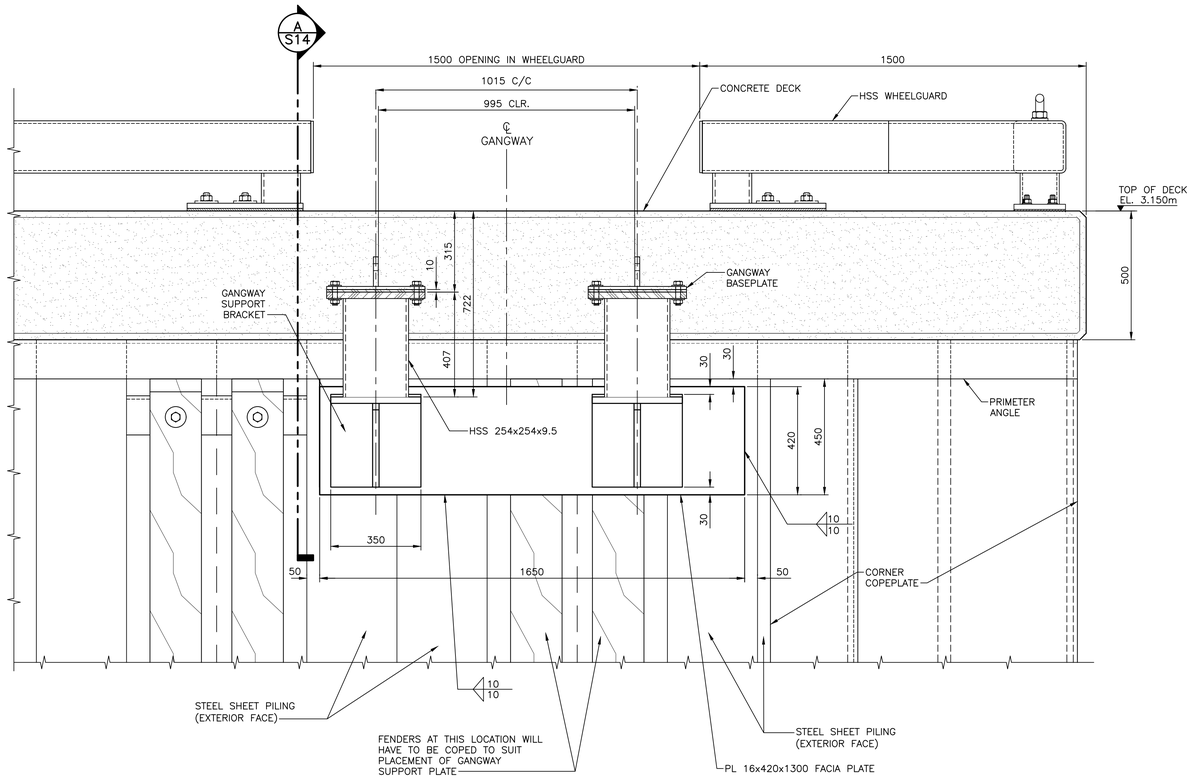

1 S5 S14 ELEVATION – GANGWAY SUPPORT

SCALE : 1:10

0mm 100 200 300 400 500 600 700 800 900 1000mm

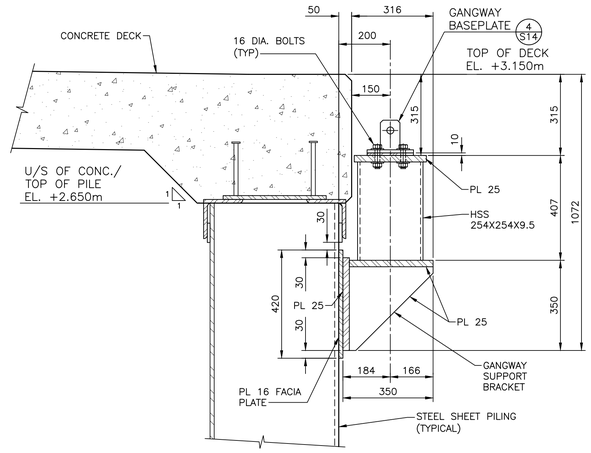

A S14 DETAIL – GANGWAY SUPPORT ARRANGEMENT

SCALE : 1:10

0mm 100 200 300 400 500 600 700 800 900 1000mm

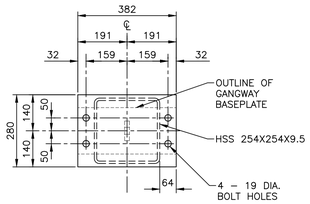

B S14 SECTION – TOP PLATE PLAN

SCALE : 1:10

0mm 100 200 300 400 500 600 700 800 900 1000mm

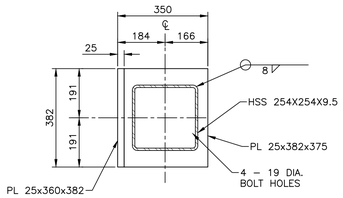

C S14 SECTION – GANGWAY SUPPORT PLAN

SCALE : 1:10

0mm 100 200 300 400 500 600 700 800 900 1000mm

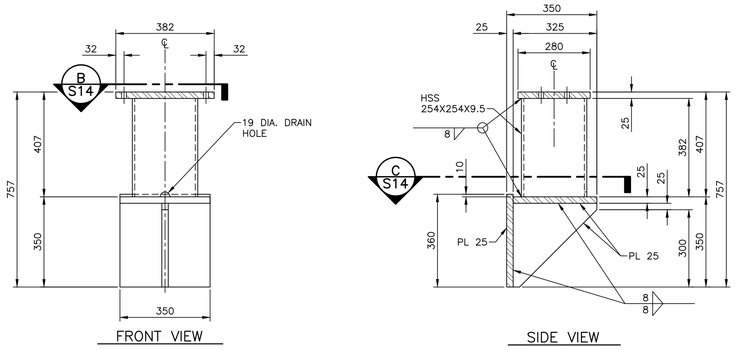

3 S14 DETAIL – GANGWAY SUPPORT DIMENSIONS

SCALE : 1:10

0mm 100 200 300 400 500 600 700 800 900 1000mm

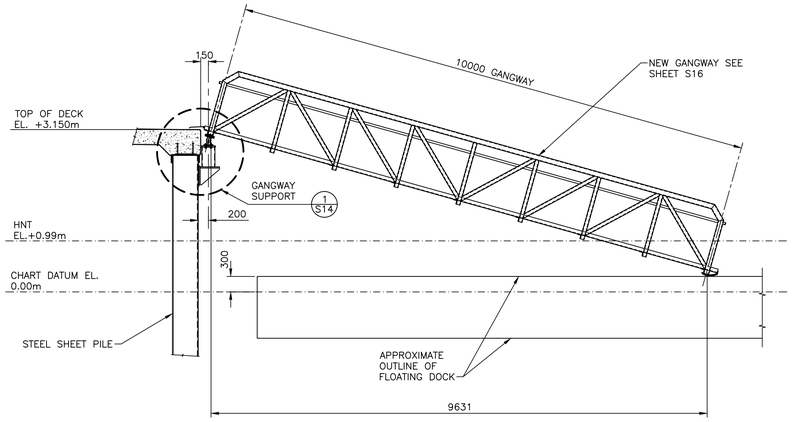

A S14 SECTION – GANGWAY ARRANGEMENT

SCALE : 1:50

0m 1m 2m 3m 4m 5m

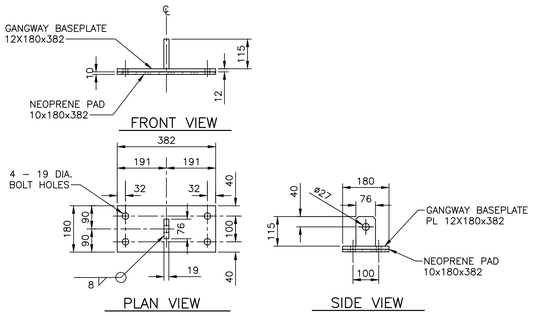

4 S14 DETAIL – GANGWAY BASEPLATE DIMENSIONS

SCALE : 1:10

0mm 100 200 300 400 500 600 700 800 900 1000mm

Public Works and Government Services Canada / Travaux Publics et Services gouvernementaux Canada

SHM CANADA
INNOVATIVE ENGINEERING AND DESIGN
STRUCTURAL ENGINEERING | STUCTURAL HEALTH MONITORING

THE ASSOCIATION OF PROFESSIONAL ENGINEERS OF THE PROVINCE OF PRINCE EDWARD ISLAND
VALID FOR THE YEAR 2022
Vidyadhar Limaye
No. 1622
DATE: 23/03/2022
LICENSED PROFESSIONAL ENGINEER
PROVINCE OF PRINCE EDWARD ISLAND

revisions		date
0	ISSUED FOR TENDER	MAR 23 2022

project / projet

WHARF CONSTRUCTION 402, 403, and 404 SAVAGE HARBOUR QUEENS CO., PE

drawing / dessin

GANGWAY CONNECTION DETAILS

designed / conçu: P.V.
date: MAR 2022
drawn / dessiné: S.W.P.
date: MAR. 21, 2022
approved / approuvé: V.L.
date
Tender / Soumission
PWGSC Project Manager / Administrateur de projets TPSGC

project number / no. du projet: R.117999.001

drawing no. / no. du dessin: S14

PWGSC B1 (2004)

E-DRM/GDD-E: 553388