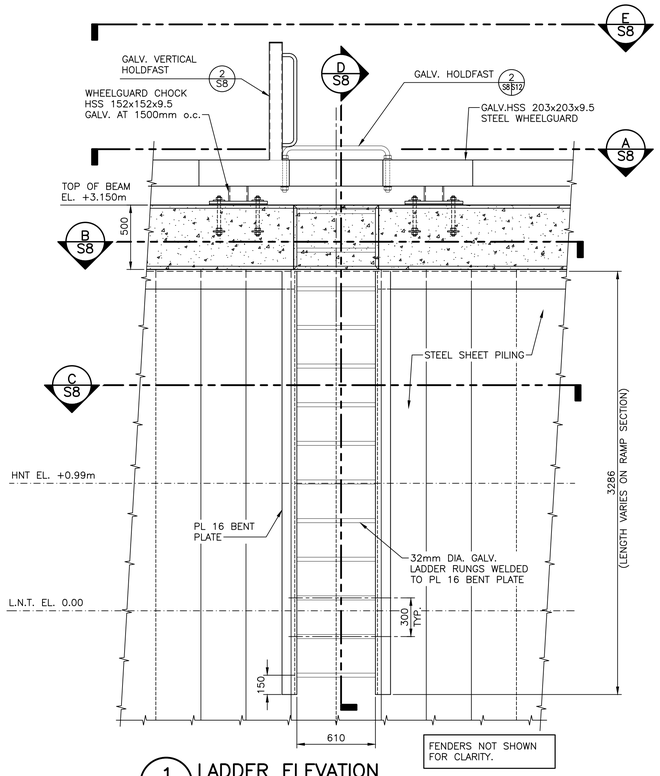

1/S8 LADDER ELEVATION

SCALE : 1:20

5,6,12

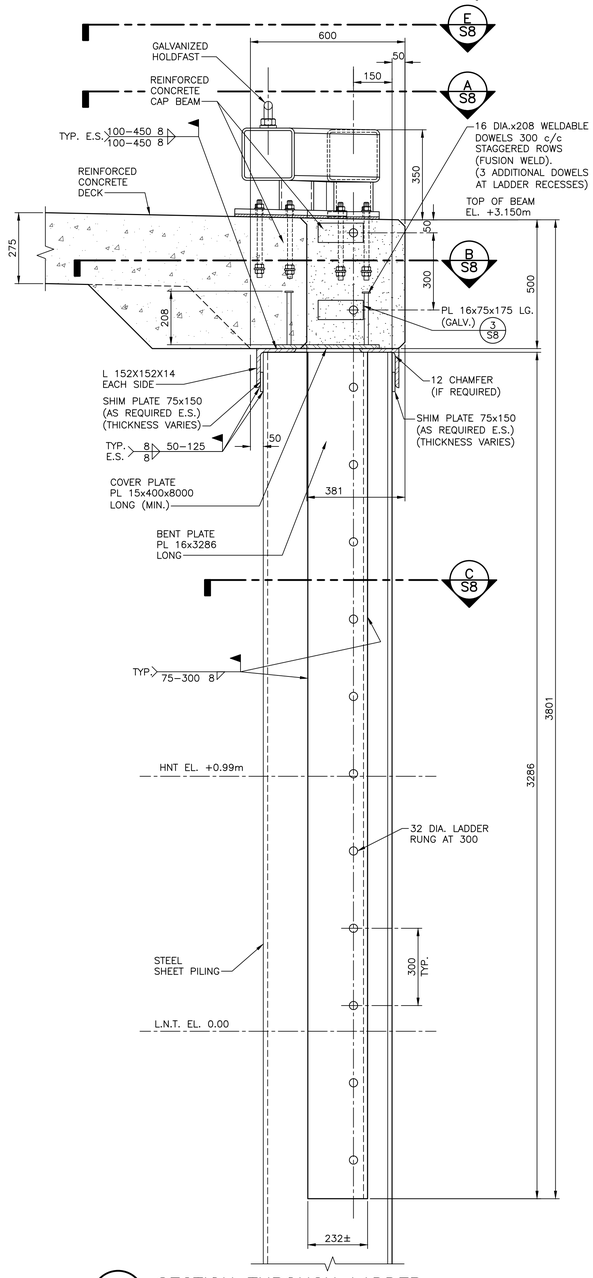

D/S8 SECTION THROUGH LADDER

SCALE : 1:10

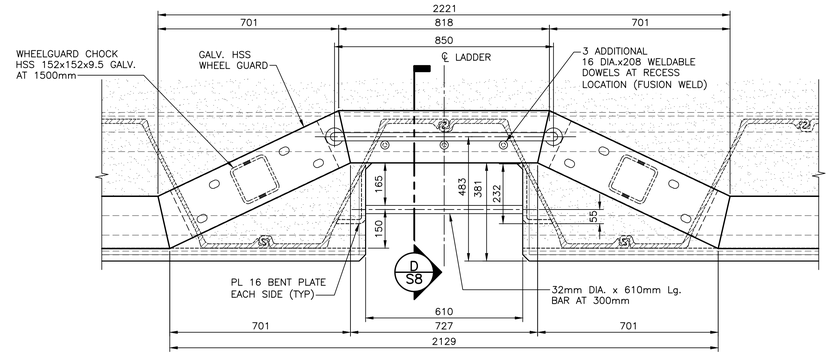

A/S8 PLAN OF WHEELGUARD AT LADDER

SCALE : 1:10

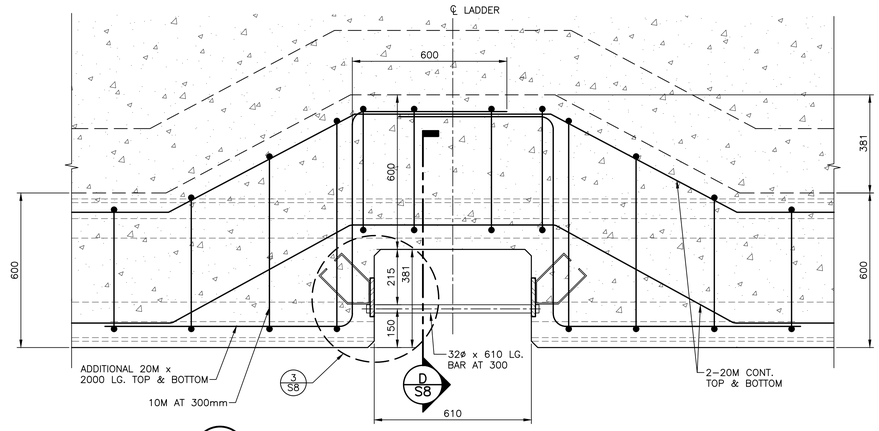

B/S8 SECTION – LADDER AT BEAM ELEVATION

SCALE : 1:10

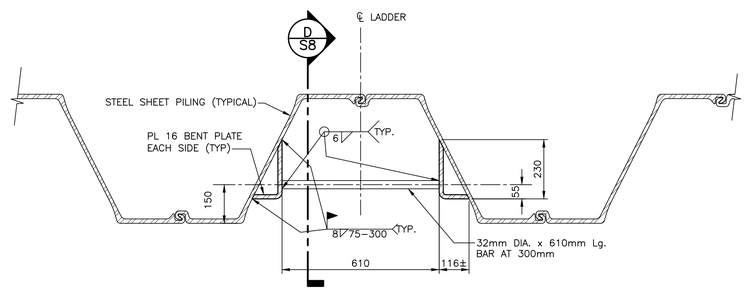

C/S8 SECTION – TYPICAL LADDER CONNECTION

SCALE : 1:10

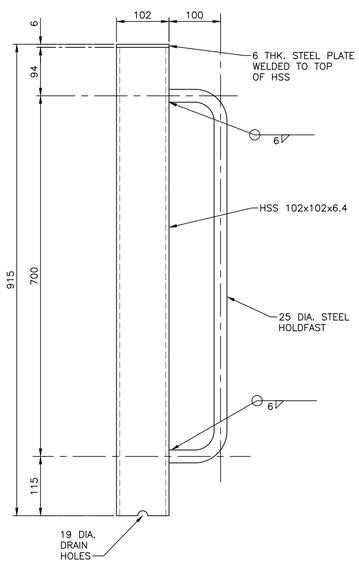

2/S8 LADDER HOLDFAST ASSEMBLY DETAIL

SCALE : 1:5

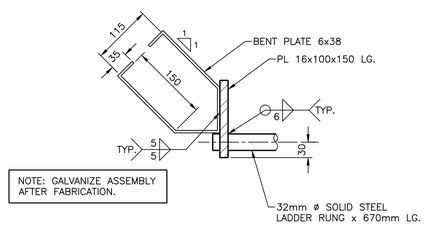

NOTE: GALVANIZE ASSEMBLY AFTER FABRICATION.

3/S8 DETAIL

SCALE : 1:5

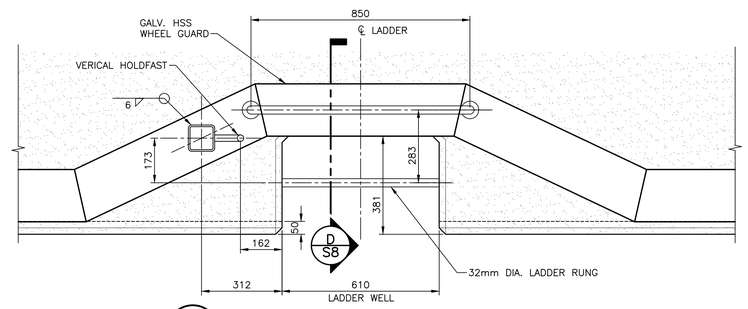

E/S8 PLAN OF WHEELGUARD AT LADDER

SCALE : 1:10

Public Works and Government Services Canada / Travaux Publics et Services gouvernementaux Canada

SHM CANADA
INNOVATIVE ENGINEERING AND DESIGN
STRUCTURAL ENGINEERING | STUCTURAL HEALTH MONITORING

THE ASSOCIATION OF PROFESSIONAL ENGINEERS OF THE PROVINCE OF PRINCE EDWARD ISLAND
VALID FOR THE YEAR 2022
Digitally signed by Vidyadhar Limaye
DN: cn=Vidyadhar Limaye, o=SHM CANADA, ou=Engineering, email=vidyadhar.limaye@shmcanada.com
Date: 2022.03.23 10:34:12 PDT
Vidyadhar Limaye
No. 1622
DATE: 23/03/2022
LICENSED PROFESSIONAL ENGINEER
PROVINCE OF PRINCE EDWARD ISLAND

revisions		date
0	ISSUED FOR TENDER	MAR 23 2022

project / projet

WHARF CONSTRUCTION 402, 403, and 404 SAVAGE HARBOUR QUEENS CO., PE

drawing / dessin

LADDER AND DETAILS

designed / conçu: P.V.
date: APR 2021
drawn / dessiné: S.W.P.
date: MAR. 23, 2022
approved / approuvé: V.L.
date
Tender / Soumission
PWGSC Project Manager / Administrateur de projets TPSGC
project number / no. du projet: R.117999.001
drawing no. / no. du dessin: S8

PWGSC B1 (2004)

E-DRM/GDD-E: 553388