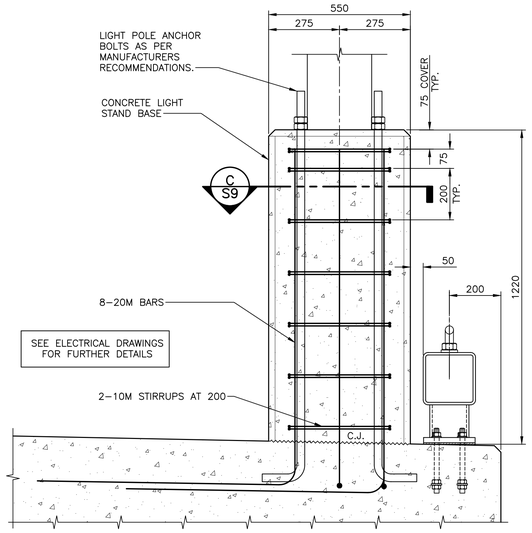

5 S3 S9 SECTION – TYPICAL CONCRETE LIGHT BASE

SCALE : 1:10

0mm 100 200 300 400 500 600 700 800 900 1000mm

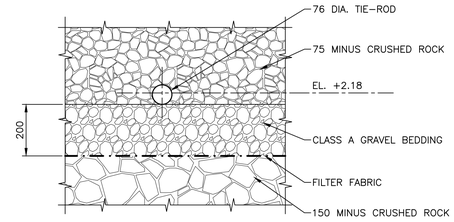

A 5,6 S9 SECTION

SCALE : 1:10

0mm 100 200 300 400 500 600 700 800 900 1000mm

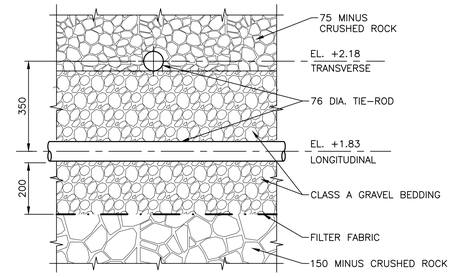

D 5,6 S9 SECTION

SCALE : 1:10

0mm 100 200 300 400 500 600 700 800 900 1000mm

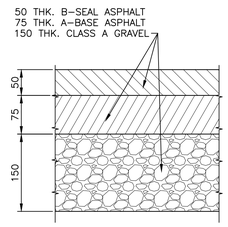

TYPICAL ASPHALT REININSTATEMENT DETAIL

SCALE : 1:5

0mm 100mm 200mm 300mm 400mm 500mm

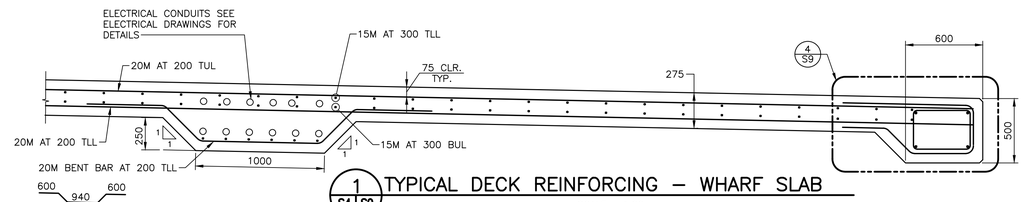

1 S4 S9 TYPICAL DECK REINFORCING – WHARF SLAB

SCALE : 1:20

0mm 500mm 1000mm 1500mm 2000mm 2500mm

NOTE:
CONTRACTOR SHALL ENSURE ISOLATION BETWEEN BLACK REINFORCEMENT AND GALVANIZED ANCHOR BOLTS AS REQUIRED. REFER TO SPECIFICATIONS FOR ADDITIONAL DETAILS.

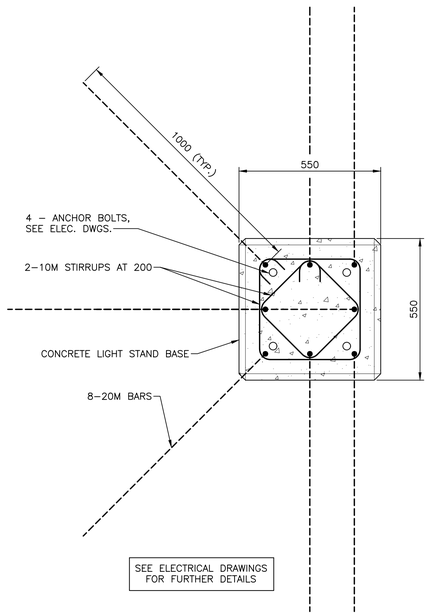

C 9,12 S9 SECTION – TYP. LIGHT STANDARD

SCALE : 1:10

0mm 100 200 300 400 500 600 700 800 900 1000mm

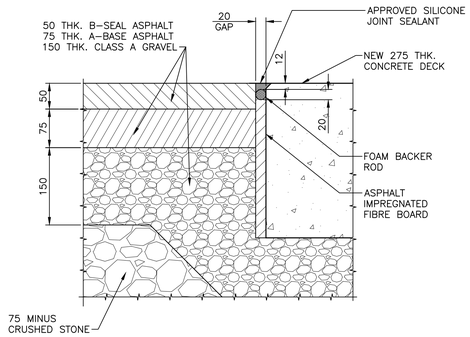

B 5,6 S9 SECTION – EXPANSION JOINT

SCALE : 1:5

0mm 100mm 200mm 300mm 400mm 500mm

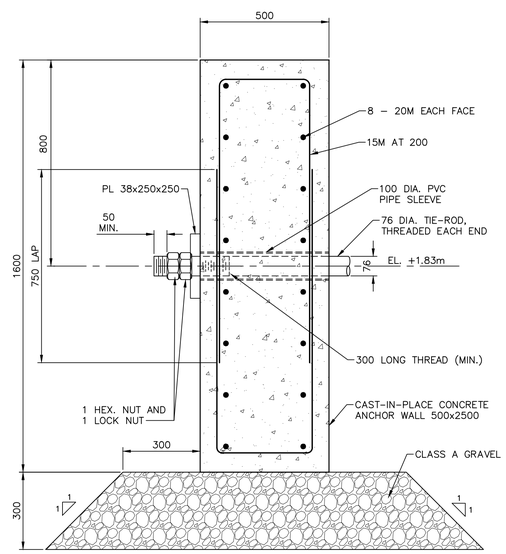

2 5,6 S9 DETAIL – ANCHOR BLOCK WALL

SCALE : 1:10

0mm 100 200 300 400 500 600 700 800 900 1000mm

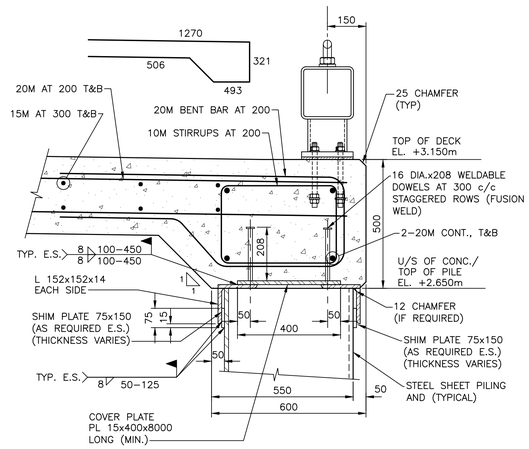

4 S9 DETAIL – CAP BEAM REINFORCING

SCALE : 1:10

0mm 100 200 300 400 500 600 700 800 900 1000mm

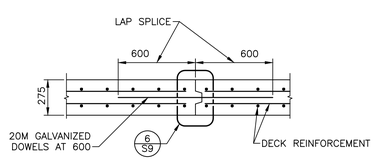

3 S3 S9 SECTION – TYPICAL CONSTRUCTION JOINT

SCALE : 1:20

0mm 500mm 1000mm 1500mm 2000mm 2500mm

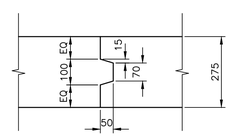

6 S9 DETAIL

SCALE : 1:10

0mm 100 200 300 400 500 600 700 800 900 1000mm

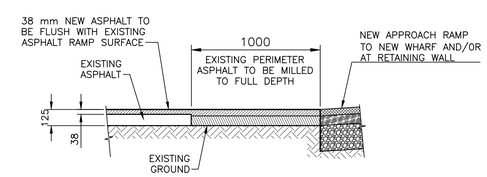

TYPICAL EXISTING/NEW ASPHALT MILLING DETAIL

SCALE : 1:20

0mm 500mm 1000mm 1500mm 2000mm 2500mm

Public Works and Government Services Canada / Travaux Publics et Services gouvernementaux Canada

SHM CANADA
INNOVATIVE ENGINEERING AND DESIGN
STRUCTURAL ENGINEERING | STUCTURAL HEALTH MONITORING

THE ASSOCIATION OF PROFESSIONAL ENGINEERS OF THE PROVINCE OF PRINCE EDWARD ISLAND
VALID FOR THE YEAR 2022
Digitally signed by Vidyadhar Limaye
DN: cn=Vidyadhar Limaye, c=CA, o=SHM Canada Ltd., ou=PEI, email=vlim@shmcanada.com
Date: 2022.03.23 16:39:10'00'
Vidyadhar Limaye
No. 1622
DATE: 23/03/2022
LICENSED PROFESSIONAL ENGINEER
PROVINCE OF PRINCE EDWARD ISLAND

revisions		date
0	ISSUED FOR TENDER	MAR 23 2022

project / projet

WHARF CONSTRUCTION 402, 403, and 404 SAVAGE HARBOUR QUEENS CO., PE

drawing / dessin

DECK, ANCHOR WALL AND MISC. REINFORCING DETAILS

designed / conçu: P.V.
date: MAY 2021
drawn / dessiné: S.W.P.
date: MAR. 23. 2022
approved / approuvé: V.L.
date
Tender / Soumission
PWGSC Project Manager / Administrateur de projets TPSGC
project number / no. du projet: R.117999.001
drawing no. / no. du dessin: S9

E-DRM/GDD-E: 553388