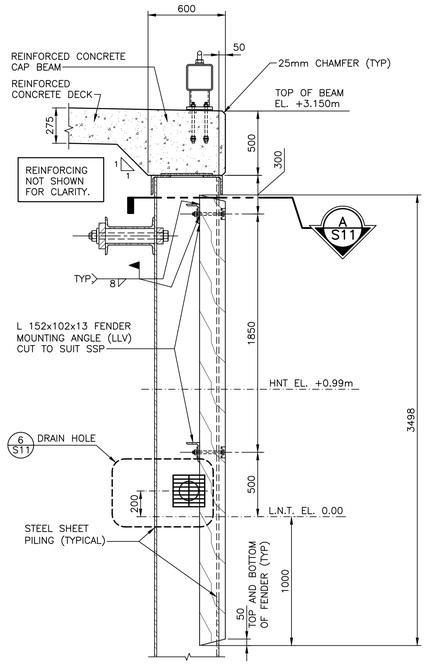

1 S11 DETAIL – TIMBER FENDERS

SCALE : 1:20

0mm 500mm 1000mm 1500mm 2000mm 2500mm

5,6,12

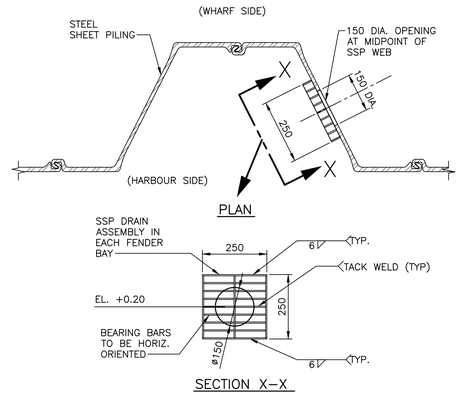

6 S11 DETAIL – TYPICAL SSP DRAIN

SCALE : 1:10

0mm 100 200 300 400 500 600 700 800 900 1000mm

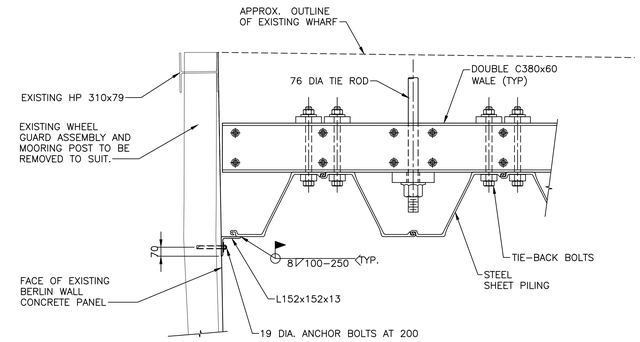

4 5,6 S11 DETAIL – NORTHWEST CORNER CLOSURE

SCALE : 1:20

0mm 500mm 1000mm 1500mm 2000mm 2500mm

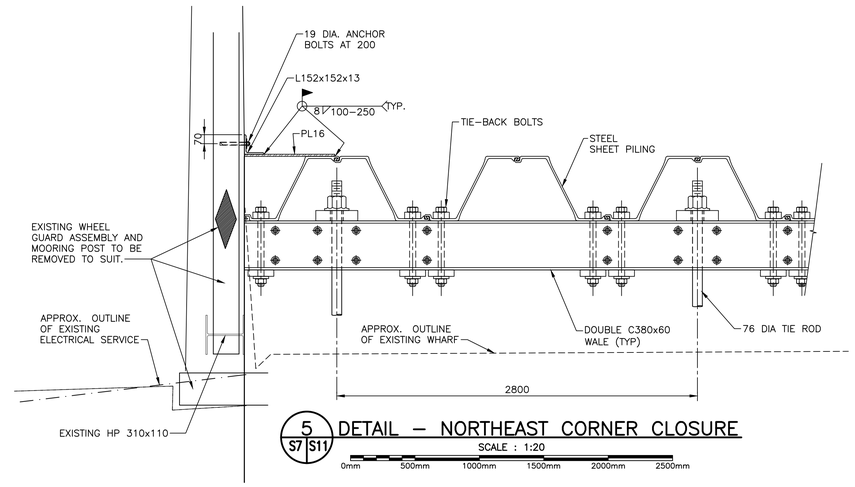

5 S7 S11 DETAIL – NORTHEAST CORNER CLOSURE

SCALE : 1:20

0mm 500mm 1000mm 1500mm 2000mm 2500mm

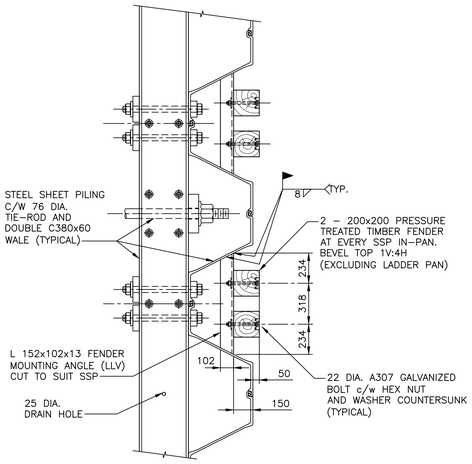

A S11 SECTION – TYPICAL FENDER

SCALE : 1:20

0mm 500mm 1000mm 1500mm 2000mm 2500mm

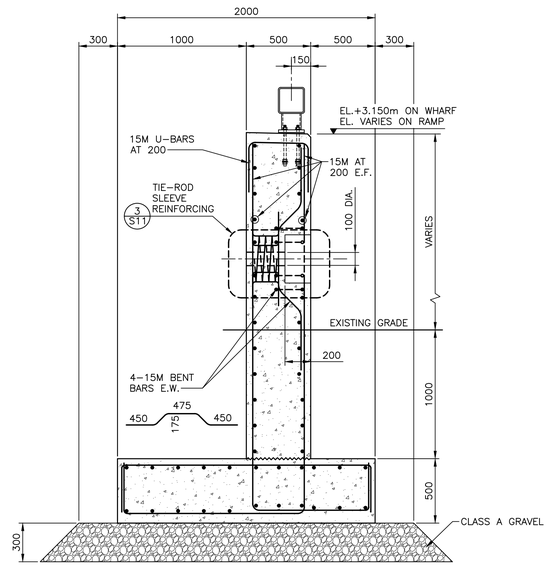

2 S4 S11 DETAIL – RETAINING WALL REINFORCING

SCALE : 1:20

0mm 500mm 1000mm 1500mm 2000mm 2500mm

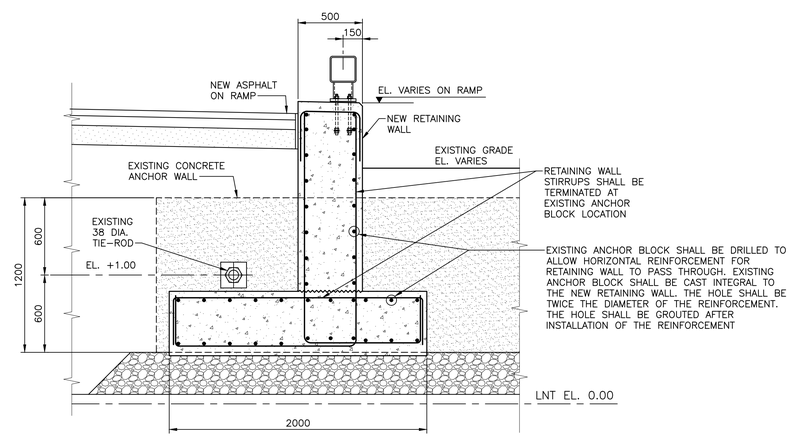

B S7 S11 SECTION – RETAINING WALL/EXISTING ANCHOR BLOCK WALL CONNECTION

SCALE : 1:20

0mm 500mm 1000mm 1500mm 2000mm 2500mm

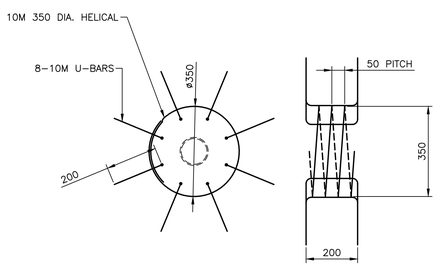

3 S11 DETAIL – TIE–ROD REINFORCING

SCALE : 1:10

0mm 100 200 300 400 500 600 700 800 900 1000mm

Public Works and Government Services Canada / Travaux Publics et Services gouvernementaux Canada

SHM CANADA
INNOVATIVE ENGINEERING AND DESIGN
STRUCTURAL ENGINEERING | STUCTURAL HEALTH MONITORING

THE ASSOCIATION OF PROFESSIONAL ENGINEERS OF THE PROVINCE OF PRINCE EDWARD ISLAND
VALID FOR THE YEAR 2022
Digitally signed by Vidyadhar Limaye
DN: cn=Vidyadhar Limaye, c=CA, o=SHM Canada, ou=SHM, email=vidyadhar.limaye@shmcanada.com
Date: 2022.03.23 15:29:10-03'00'
Vidyadhar Limaye
No. 1622
DATE: 23/03/2022
LICENSED PROFESSIONAL ENGINEER
PROVINCE OF PRINCE EDWARD ISLAND

revisions		date
0	ISSUED FOR TENDER	MAR 23 2022

project / projet

WHARF CONSTRUCTION 402, 403, and 404 SAVAGE HARBOUR QUEENS CO., PE

drawing / dessin

SHEET PILE SECTIONS AND DETAILS 2

designed / conçu: P.V.
date: JUNE 2021
drawn / dessiné: S.W.P.
date: MAR. 23, 2022
approved / approuvé: V.L.
date
Tender / Soumission
PWGSC Project Manager / Administrateur de projets TPSGC

project number / no. du projet: R.117999.001

drawing no. / no. du dessin: S11

E-DRM/GDD-E: 553388