Public Works and Government Services Canada | Travaux publics et Services gouvernementaux Canada

RETURN BIDS TO:
RETOURNER LES SOUMISSIONS À:
Bid Receiving - PWGSC / Réception des soumissions - TPSGC
11 Laurier St. / 11, rue Laurier
Place du Portage, Phase III
Core 0B2 / Noyau 0B2
Gatineau, Québec K1A 0S5
Bid Fax: (819) 997-9776

SOLICITATION AMENDMENT
MODIFICATION DE L'INVITATION

The referenced document is hereby revised; unless otherwise indicated, all other terms and conditions of the Solicitation remain the same.

Ce document est par la présente révisé; sauf indication contraire, les modalités de l'invitation demeurent les mêmes.

Comments - Commentaires

Vendor/Firm Name and Address
Raison sociale et adresse du fournisseur/de l'entrepreneur

Issuing Office - Bureau de distribution
Fuel & Construction Products Division
L'Esplanade Laurier,
140 O'Connor Street,
East Tower, 4th floor,
Ottawa
Ontario
K1A 0S5

Title - Sujet Water Treatment System	
Solicitation No. - N° de l'invitation W8476-216378/A	**Amendment No. - N° modif.** 006
Client Reference No. - N° de référence du client W8476-216378	**Date** 2022-07-21
GETS Reference No. - N° de référence de SEAG PW-$$HL-673-81098	
File No. - N° de dossier hl673.W8476-216378	**CCC No./N° CCC - FMS No./N° VME**
Solicitation Closes - L'invitation prend fin **at - à** 02:00 PM Eastern Daylight Saving Time EDT **on - le** 2022-08-26 Heure Avancée de l'Est HAE	
F.O.B. - F.A.B. **Plant-Usine:** ☐ **Destination:** ☑ **Other-Autre:** ☐	
Address Enquiries to: - Adresser toutes questions à: Shaun Feagan	**Buyer Id - Id de l'acheteur** hl673
Telephone No. - N° de téléphone (613) 295-9018 ( )	**FAX No. - N° de FAX** ( ) -
Destination - of Goods, Services, and Construction: **Destination - des biens, services et construction:** Specified Herein	

Instructions: See Herein

Instructions: Voir aux présentes

Delivery Required - Livraison exigée	**Delivery Offered - Livraison proposée**
Vendor/Firm Name and Address **Raison sociale et adresse du fournisseur/de l'entrepreneur**	
Telephone No. - N° de téléphone **Facsimile No. - N° de télécopieur**	
Name and title of person authorized to sign on behalf of Vendor/Firm (type or print) **Nom et titre de la personne autorisée à signer au nom du fournisseur/ de l'entrepreneur (taper ou écrire en caractères d'imprimerie)**	
Signature	**Date**

Canada

This amendment is raised to:

1. **Answer questions from potential bidders**
2. **Amend the Request for Proposals**
3. **Extend the closing date of the RFP**

Questions:

Q128. Appendix A page A1-82/262 ref: A1.2.2.11.1 “The Water Storage Tank of A1.2.2.2 must be NSN 5430-20-012-2725 (or equivalent) “The referenced NSN has a very specific design that has been tested to meet DND’s requirements. Can you define what you mean by Equivalent. There are a number of commercial off the shelf water bladders/onions available on the market. Does the “Equivalent” have to be a 100% match to the NSN Design and configuration or is there some minimum technical criteria it has to meet? Please advise.

A128. Any proposed alternative Water Storage Tanks not included in NSN 5430-20-012-2725 must meet all requirements outlined in “Annex J – Mandatory Performance Criteria – Water Storage Tank”. Refer to the amendment to the RFP below.

Q129. In APPENDIX A to ANNEX A1 of W8476-216378, STATEMENT OF WORK, the following is stated:
A1.2.2.15.1 - The Water Quality Analysis Reconnaissance Kit of A1.2.2.2, must be NSN 6630-21-912-5298 (or equivalent);
A1.2.2.15.2 - The Water Quality Analysis Reconnaissance Kit dimensions are 62 cm x 50 cm x 22 cm.
A1.2.2.15.3 - The Water Quality Analysis Reconnaissance Kit weight is 12.7 kg.
Question: The Water Quality Analysis Reconnaissance Kit must be NSN 6630-21-912-5298 (or equivalent) is in the requirements. There are no details or information available on this kit or the kit’s contents. Could DND provide the kit as GFE so that there are no unknowns or costly markups?

A129. No, Canada will not provide the Water Quality Analysis Reconnaissance Kit as GFE, However the bidder may propose an alternate Water Quality Analysis Reconnaissance Kit. Any proposed alternative Water Quality Analysis Reconnaissance Kit not included in NSN 6630-21-912-5298 must meet all requirements outlined in “Annex K – Mandatory Performance Criteria – Water Quality Analysis Reconnaissance Kit”. Refer to the amendment to the RFP below.

Q130. Please confirm that the “Initial Provisioning Spares” referred to on the title page of Annex F consists of the following non-evaluated items:
a. Annex F Table – Acquisition, Item #54, “Option to acquire Spare Parts after approval from DND”, and,
b. Annex F Table – Acquisition, Item #56, “Option to acquire Fleet Support Spares after approval from DND - as described in the Annex A A3.38 DID - List of Items to be Supported” (as amended by the question preceding).

A130. Canada confirms the “Initial Provisioning Spares” consists of Items #54 and #56, and are not part of the Financial Evaluation. The title page of Annex F will be amended for clarity.

Refer to the amendment to Annex F below.

Q131. The water quality testing described in A 5.0 is comprehensive. We are looking for Canada to confirm that the complete test procedure must be performed by a third-party qualified, licenced and accredited water purification laboratory to meet the stringent test requirements? For example, Test Water 3 – Organic Reduction in Table 1 with MTBE and benzene - the challenge is to have constant raw water concentrations over the duration of the respective test since these two substances have a very high vapour pressure. And for Test Water 2 – Bacteria and Virus Elimination – the challenge is setting the correct concentration and then being able to validate the concentrations via analysis.

Our concern is that bidders may underestimate and undervalue the complete effort for the whole testing in accordance with A5.0. For example, preparing the four raw waters according to Table 1 requires setting the correct initial concentrations and keeping the concentrations stable (within accuracy of measurement) over the whole respective including sampling and analysis. Some of the substances are harmful and must be handled accordingly.

It is our understanding that all water purification tests can only be performed by a third-party ISO/IEC 17025 licenced and certified laboratory and that this laboratory must be identified within bid. Please confirm.

A131. As per A5.1.6.5, all laboratory analyses must be conducted by a laboratory which is accredited to ISO/IEC 17025 for the required parameters in drinking water. However, these laboratory analyses apply only to sample testing, not in-situ testing. A third party ISO/IEC 17025 licenced and certified laboratory is therefore only required for sample testing (defined under A5.1.6.6), and not for the testing in its entirety.

Additionally, the accredited laboratory test results are not required to be available/presented to Canada prior to proceeding with WTS testing. Only in-situ test water parameters must be met prior to WTS testing to proceed.

Q132. Appendix A, A1.1.4.2 states “Where conditions warrant the use of the ASU with the WTS, two (2) operators must be able to set up the system within two (2) hours after arrival at the selected water source”. Can Canada advise if this time includes erection of the GFE cold weather shelter in A1.2.3.8? If so, can Canada provide the estimated time for two operators to erect the cold weather shelter?

A132. Canada has determined that it will take approximately 45 minutes to deploy the ASU shelter with the proper number of personnel, which leaves 75 minutes to complete the full setup of the water purification system. The requirement will be amended so that bidders can assume that the ASU Shelter is already constructed, and that they have an additional 75 minutes remaining to set up the rest of the system.

Refer to the amendment to Annex A1 below.

Q133. Appendix A, A1.1.6.2 states “Where conditions warrant the use of the ASU with the WTS, two (2) operators must be able to tear down and prepare the system for a road move, including attaching the trailer to its prime mover in two (2) hours”. Can Canada advise if this time includes tear down of the GFE cold weather shelter in A1.2.3.8? If so, can Canada provide the estimated time for two operators to tear down the cold weather shelter?

A133. Canada has determined that it will take approximately 45 minutes to tear down the ASU shelter with the proper number of personnel, which leaves 75 minutes to complete the full tear-down of the water purification system. The requirement will be amended so that bidders can assume that the ASU Shelter is already deconstructed, and that they have an additional 75 minutes remaining to tear down the rest of the system.

Refer to the amendment to Annex A1 below.

Q134. Would Canada please confirm whether bidders should still submit a COVID-19 Vaccination Requirement certificate (pursuant to paragraph 5.2.8) given that the COVID-19 Vaccination Policy for Supplier Personnel will no longer be in effect by the closing date (June 30, 2022)?

A134. The COVID-19 Vaccination Policy for Supplier Personnel has been suspended.

Refer to the amendment to the RFP below.

Q135. Paras 8.3.6.4 and 8.3.6.5 are listed as sub-paras of 8.3.6, despite not being related to language requirements. Can Canada confirm the paragraph numbering for paras 8.3.6.4 and 8.3.6.5?

A135. Acknowledged.

Refer to the amendment to Annex A1 below.

Q136. The heater for the ASU will be provided GFE. It is assumed from the information provided that the heater is electric and does not utilize fuel to generate the heat. Your clarification further states that the unit is to draw its power from the WTU. Are you assuming that the power is to be produced from the WTU Gen Set or Shore power? If

the power is coming from the WTU Gen Set, then the heater's power consumption will affect the power budget (possibly significantly). The WTU must be able to operate for the period of time specified in the SOW. Are we to include the ASU power requirements (extra fuel) in this calculation? If so, would you please advise what is the watts/hour draw you require the WTU gen set to support, and for what number of hours per day.

A136. The 130K BTUH duct type portable heater is powered by 120V AC power and fueled by JP8 or F34 diesel. According to the ASU shelter document included in Amendment 004, the heater requires a maximum of 13A at 120V. This draw is used to power the heater fan to circulate the warm air in the shelter. Diesel fuel for the ASU heater will be provided by Canada.

Q137. In the information provided you have also included a group of accessories including a shelter lighting package and power cable. Are we to accommodate space in the ASU design for the storage of the lighting system?

A137. Yes, the lighting system will be stored in two boxes. The box sizes are defined in Amendment 004, ASU Cold Weather Shelter document under Kit, LED lighting, Fixtures with power distribution section.

Q138. Regarding the power cable, if as indicated in the information provided, the Heater is to draw 13 amps at 110V (not including lights, pumps and warming blankets) the cable wire gauge needs to be sized to avoid voltage drop between the WTU and ASU shelter. Would you please advise the anticipated max distance between the WTU and ASU?

A138. The maximum distance between the WTU and ASU will be determined using combined length of the two (2) power cables described in A1.2.1.5.4.8.

Q139. Will you be shipping the Shelter, Heater and accessories for each ASU to the integrator, or are we to receive one Shelter system for design and fit up, with the balance to be provided by DND directly to the end user?

A139. Yes, cold weather shelter equipment, heater and lights will be provided to the prime for design and fit up. Additionally, the balance will be provided by DND directly to the end-user.

Q140. In the design concept provided by DND the system is to draw the feed water directly from the local source. There is no provision for a feed water reservoir. Will DND provide a feed water reservoir as GFE, or do you anticipate using one of the onion tanks for this purpose?

A140. Canada will not be providing such equipment as GFE and does not anticipate using the onion tanks for that purpose. The design concept is to draw water directly from the source using the feed water hoses without the use of a reservoir.

Q141. When drawing water from a source in winter conditions, if the water is not warmed prior to treating, the systems throughput will be degraded. Does DND anticipate the need to warm the feed water to ensure a minimum acceptable throughput?

A141. Canada does not anticipate the need to warm the feed water.

Q142. We are assuming there are pre-existing manuals and drawing sets for the GFE. Are we to incorporate this information into the Data deliverables, such as the TLAD, Manuals, etc?

A142. No - The Technical Publications for the WTS only need to mesh with any GFE Technical Publications and refer to them by National Defence Index of Documentation number, which will be provided to the Contractor. Available GFE Technical Publications can be provided as needed for reference post contract award.

Q143. At A.1.2.1.6.21 Screen Readable in full sun: Do you want the operator to be able to dim the screen for night operations?

A143. Yes, the requirement for the operator to be able to dim the screen for night operations will be added.

Refer to the amendment to Annex A1 below.

Q144. In APPENDIX A to ANNEX A1 of W8476-216378, STATEMENT OF WORK, the following is stated:
A1.2.2.10.7 - The Distribution Pump must operate on 120/208 V with 30 m power cord equipped with NEMA 5 power plug.

A1.2.2.10.3 - The Distribution Pump must operate on 120/208 V with a power cord of no less than thirty (30 m).

A1.2.2.8.10.4 The power cord for the Distribution Pump must be equipped with a waterproof power plug and must interface with a corresponding external outlet on the WTU.

Question: Requirement A1.2.2.10.7 is a duplicate requirement to A1.2.2.10.3 related to distribution pump power and cord length, however, further stipulates a NEMA 5 power plug. A1.2.2.8.10.4 further specifies the plug be waterproof, of which NEMA 5 is not. Will Canada remove the A1.2.2.10.7 requirement?

A144. Canada will retain the requirement for the power cord and plug on pumps to be NEMA, but remove the requirement that they be NEMA 5.

Refer to the amendment to Annex A1 below.

Q145. Amendment 004 and 005 have raised technical matters and we expect further questions and potential changes that will require more time to address. Please accept our request to extend the bid closing date to 9 September 2022?

A145. The closing date of the RFP will be extended to August 26, 2022 at 2:00 pm.

Q146. The answer to question Q108 confirms that the testing temp for the water is to be 18-22C during water quality testing and that testing is to be done inline. The current configuration called out in the ASU-WPS does not provide for temperature pre-conditioning of the feed water in winter conditions. There is no call out for a pre-heater to raise the water temp from 0C to 18C, nor is there a heated reservoir called out for the pretreated water. Are we to assume that this equipment is to be provided GFE or are we required to design in some form of capability to address the heating of the pretreated water in winter conditions?

A146. Although the WTS must be capable of purifying a water source with a temperature range of 4ºC to 40ºC as per A1.4.1.2.1.5, the 18°C-22°C requirement is related to the test waters. This temperature range was selected to create conditions that are easily replicated in a laboratory environment at room temperature.

Q147. In Amendment 3 of RFP W8476-216378, M1 - Annex A, Appendix A, Para A1.4.1.2.1 states:
The Bidder's Team must have designed, tested and delivered a minimum of two (2) different potable water purification systems within the last 10 years, each having met or exceeded all of the following requirements.

Question: Since Canada has amended M1 to include a minimum of two examples, will Canada consider following that change through to PR1. We suggest that PR1 be amended to read 'For the potable water purification systems delivered in accordance with M1, additional points will be awarded if at least one (1) of those systems meets or exceeds the following requirements?'

A147. Canada accepts the proposed changes.

Refer to the Amendment to Annex E.

Q148. The number of amendments made to Annex A1 is making the document difficult to follow. Can Canada provide an updated version which incorporates the changes from each amendment?

A148. Yes, Canada will provide an updated copy of Annex A1 with all changes up to and including this amendment (006) incorporated. Changes to the original Annex A1 will be highlighted. See below for the updated document.

Q149. Amendment 004 includes pages from C-87-114-001/MA-000. It is noted that these pages include dimensions for NSN 8340-20-011-4834 (Kit, 4X Endwall Stanchion, Packed in Bag). The length of the Kit Bag is 2930 mm (94.1 in) which is longer than the BICON ISO Container. In addition, 2930 mm does not convert to 94.1 in. Please confirm which dimension is correct.

As a follow up, if the 2930mm dimension is correct, what is Canada's expectation for placing this item in the BICON ISO Container?

A149. The Endwall Stanchions are 2390mm in length, not 2930mm. There is an error in the ASU Shelter Document in Amendment 004.

The Solicitation is hereby amended as follows:

- **The closing date of the RFP is extended to August 26, 2022 at 2:00 pm.**

- **At RFP 2.1**

  Insert : 2.1.1 SACC Manual Clauses
  SACC Manual Clause B3000T (2006-06-16) – Equivalent Products
  SACC Manual Clause B3010T (2010-01-11) – Substitute Products – Samples (DND):
  If the Bidder offers a substitute product, Canada reserves the right to request a sample from the Bidder in order to determine its equivalency in form, fit, function, quality and performance to the item specified in the bid solicitation.

  The Bidder must, upon request from the Contracting Authority, provide a sample to the Technical Authority, transportation charges prepaid, and without charge to Canada, within ten (10) calendar days from the date of request. The sample submitted by the Bidder will remain the property of Canada and will not be considered as part of the deliverables in any resulting contract. If the sample does not meet the requirements of the bid solicitation or the Bidder fails to comply with the request of the Contracting Authority, the bid will be declared non-responsive.

- **At RFP 5.2**

  Delete: 5.2.8 and **5.2.9** in their entirety

- **At Annex A1 8.3**

  Delete: 8.3.6.4 The Contractor must review and accept responsibility for the validity of all (both their own and all sub-Contractors) information found in the Technical Publications.

  Insert: 8.3.6.4 The Contractor must provide to the DND ILSM for approval, certificates of Translation Accuracy Check (DND2515) for each translated Publication produced under para 8.3 of ANNEX A1.

  Delete: 8.3.6.5 in its entirety.

  Insert: 8.3.7 The Contractor must review and accept responsibility for the validity of all (both their own and all sub-Contractors) information found in the Technical Publications

- **At Annex A1, Appendix A1.1.4.2**

  Delete: Where conditions warrant the use of the ASU with the WTS, two (2) operators must be able to set up the system within two (2) hours after arrival at the selected water source.

  Insert: Where conditions warrant the use of the ASU with the WTS, two (2) operators must be able to set up the system within two (2) hours after arrival at the selected water source. For verification purposes, assume that that ASU shelter is already assembled and that there are 75 minutes remaining to complete the set up.

- **At Annex A1, Appendix A1.1.6.2**

  Delete: Where conditions warrant the use of the ASU with the WTS, two (2) operators must be able to tear down and prepare the system for a road move, including attaching the trailer to its prime mover in two (2) hours.

  Insert: Where conditions warrant the use of the ASU with the WTS, two (2) operators must be able to tear down and prepare the system for a road move, including attaching the trailer to its prime mover in two (2) hours. For verification purposes, assume that that ASU shelter is already disassembled and that there are 75 minutes remaining to complete the tear down in preparation for a road move.

- **At Annex A1, Appendix A1.2.1.6.2.1**

  Delete: Must have a sun-readable screen

  Insert: Must have a sun-readable screen with adjustable brightness

- **At Annex A1, Appendix A1.2.2.8.8**

  Delete: The power cord for the Feed Pump must be equipped with a waterproof power plug and must interface with a corresponding external outlet on the WTU.

  Insert: The power cord for the Feed Pump must be equipped with a waterproof NEMA plug and must interface with a corresponding NEMA receptacle on the WTU.

- **At Annex A1, Appendix A1.2.2.10.4**

  Delete: The power cord for the Distribution Pump must be equipped with a waterproof power plug and must interface with a corresponding external outlet on the WTU.

  Insert: The power cord for the Distribution Pump must be equipped with a waterproof NEMA plug and must interface with a corresponding NEMA receptacle on the WTU.

- **At Annex A1, Appendix A1.2.2.10.7**

  Delete: The Distribution Pump must operate on 120/208 V with 30 m power cord equipped with NEMA 5 power plug.

  Insert: (RESERVED)

- **At Annex E, 6.0 Evaluation of Point-Rated Criteria, PR1**

  Delete: For the potable water purification systems delivered in accordance with M1, additional points will be awarded if at least one (1) of the two (2) systems meets or exceeds the following requirements:

  Insert: For the potable water purification systems delivered in accordance with M1, additional points will be awarded if at least one (1) of these systems meets or exceeds the following requirements:

- **At Annex F, Financial Evaluation Pricing Summary Sheet**

  Delete: Total EVALUATED Cost of Water Treatment project, including the Acquisition, Initial Provisioning Spares and the In-Service Support cost.

  Insert: Total EVALUATED Cost of Water Treatment project, including the Acquisition and the In-Service Support cost.

All other terms and conditions remain unchanged

Annex J – Mandatory Performance Criteria – Water Storage Tank

Solicitation No.: W8476-216378/A

Date: 21-JUL-2022

TABLE OF CONTENTS

1.0 SCOPE

1.1 Purpose

1.1.1 This Annex outlines the requirements for the Advanced Sub-Unit Water Purification System (ASUWPS) Water Storage Tank. Any proposed alternative Water Storage Tanks not included in NSN 5430-20-012-2725 must meet all requirements outline herein to be considered equivalent.

1.2 Background

1.2.1 The ASUWPS project is procuring Water Storage Tanks (NSN 5430-20-012-2725) as part of the Miscellaneous Equipment Unit (MEU). In the event that the requested NSN cannot be provided, requirements and evaluation criteria for proposed equivalent Water Storage Tanks are needed to ensure compliance with the requirement. The Water Storage Tank requirement can be found at Appendix A to W8476-216378, para. A1.2.2.11.1 and is as follows:

> "The Water Storage Tank of A1.2.2.2 must be NSN 5430-20-012-2725 (or equivalent)."

1.3 Acronyms and Abbreviations

ASUWPS	Advanced Sub-Unit Water Purification System
AWR	Additional Work Request
DCSEM	Director Combat Support Equipment Management
DLP	Director Land Procurement
NSN	NATO Stock Number
PSPC	Public Services and Procurement Canada
WTS	Water Treatment System

2.0 APPLICABLE DOCUMENTS

2.1 References

2.1.1 Whereas mentioned, the following Standards must be used for the preparation of deliverables to the extent specified in this document

COMMERCIALLY AVAILABLE

REFERENCE NUMBER	PROMULGATION DATE	REFERENCE TITLE
MIL-T-53029C	1994-11-05	MILITARY SPECIFICATION: TANKS, FABRIC, COLLAPSIBLE - 3,000, 10,000, 20,000, AND 50,000 GALLON, DRINKING WATER

3.0 REQUIREMENTS

3.1 General

3.1.1 Requirement A1.2.2.11.1 will be validated for compliance by:

3.1.1.1 Inspection, should the bidder choose to provide the NSN 5430-20-012-2725 Water Storage Container; or

3.1.1.2 Certification IAW Appendix A, should the requested NSN be unavailable and an equivalent Water Storage Tank is proposed.

3.1.2 If the bidder chooses to provide an equivalent Water Storage Tank, they must provide DND with a completed electronic copy of Appendix A: Comparative Table clearly indicated compliance with all requirements of the Water Storage Tank.

3.1.3 Compliance of proposed equivalent Water Storage Tank will be evaluated in accordance with Appendix A. All requirements must be found compliant for an equivalent to be accepted.

3.2 Equivalency Requirements

3.2.1 The Water Storage Tank assembly must contain no less than:

3.2.1.1 One (1) Transport bag

3.2.1.2 One (1) Water Storage Tank Protection Sheet;

3.2.1.3 One (1) Water Storage Tank;

3.2.1.4 One (1) Lid;

3.2.1.5 Two (2) Fittings;

3.2.1.6 One (1) Repair Kit; and

3.2.1.7 One (1) instruction sheet.

3.2.2 The Water Storage Tank fabric specifications must conform to MIL-T-53029C – 32 oz Polyurethane, NSF 61 approved for potable water.

3.2.3 The Water Storage Tank fabric specifications must meet or exceed the specifications below:

3.2.3.1 The Base fabric property of the Water Storage Tank must be Nylon with a weight of at least 10 oz/sq. yd. as specified at MIL-T-53029C specification, Test method 5041;

3.2.3.2 The Coated fabric of the Water Storage Tank must:

3.2.3.2.1.1 Have a finished coated weight of 32 oz./sq.yd as specified at MIL-T-53029C test method 3154;

3.2.3.2.1.2 Have a tearing strength (Wrap/Fill) of at least 35 lbs. as specified in MIL-T-53029C test method 5134;

3.2.3.2.1.3 Have a breaking strength (Wrap/Fill) of at least 500 lbs./in as specified in MIL-T-53029C test method 5102;

3.2.3.2.1.4 Have a weathering Resistance after 750 hours exposure at 5% elongation (Warp/Fill), of at least 80% of initial, as specified in MIL-T-53029C test method 5804/5102;

3.2.3.2.1.5 Have a puncture resistance of at least 150 lbs. as specified in MIL-T-53029C test method 5120 and para 4.5.2.13;

3.2.3.2.1.6 Have a low temperature crease resistance to cracking, peeling or delamination (Appearance after unfolding) as specified in MIL-T-53029C para 4.5.2.14;

3.2.3.2.1.7 Have a fungus resistance to cracking, blistering or delamination coating with a retention of breaking strength of at least 70%;

3.2.3.2.1.8 Have a coating adhesion – Initial of at least 15 lbs./in. as specified in MIL-T-53029C para 4.5.2.16;

3.2.3.2.1.9 Have a coating adhesion of at least 12 lbs./in for 14 days, after immersion in distilled water at 1600 F. +/- 2° F. as specified in MIL-T-53029C para 4.5.2.16.1; and

3.2.3.2.1.10 Have a coating adhesion of at least 10 lbs./in for 42 days, after immersion in distilled water at 1600 F. +/- 2° F. as specified in MIL-T-53029C para 4.5.2.16.1.

3.2.4 Water Storage Tank Dimensional Specifications

3.2.4.1 The Water Storage Tank must have reroll dimensions of at most 712mm x 672mm x 1016mm.

3.2.4.2 The Water Storage Tank must have a capacity of at least 5691 L;

3.2.4.3 The Water Storage Tank must have the following dimensions when filled to capacity with water:

3.2.4.3.1 A diameter of at least 297cm; and

3.2.4.3.2 A height of at least 129cm (measured from base to top of collar).

3.2.4.4 The Water Storage Tank must have a water testing access opening (collar) of at least 139cm.

3.2.4.5 The Water Storage Tank must have a unique flotation collar that requires no inflation.

3.2.4.6 The Water Storage Tank must have a form-fitted top which can be held in the closed position by a zipper.

3.2.4.7 The Water Storage Tank dry weight (no fittings) must be 30kg or less.

3.2.4.8 The Water Storage Tank dry weight including fittings and Lid must be 50kg or less.

3.2.4.9 The Water Storage Tank must have handles on the outside and bottom of the tank.

3.2.4.10 The Water Storage Tank must have one handle on the inside to facilitate cleaning and hanging for drying.

3.2.4.11 The Water Storage Tank must have at least two draining port with cover, 180 degrees apart.

3.2.5 The Transport Bag included in the Water Storage Tank Assembly must:

3.2.5.1 Transport all the Water Storage Tank items assembly;

3.2.5.2 Compress the Water Storage Tank to reach factory rerolled packed dimension;

3.2.5.3 Protect The Water Storage Tank from the ground when stored;

3.2.5.4 Include a sheet which is at least 3.02m in length and width to protect the Water Storage System from being punctured on the ground; and

3.2.5.5 Be of coated nylon IAW MIL-T-53029C specifications.

3.2.6 The Fittings Kit included in the Water Storage Tank Assembly must:

3.2.6.1 Come inside a tool box;

3.2.6.2 Include at least two Type F Camloc MNPT Stainless steel adapters;

3.2.6.3 Include at least 2 Camloc stainless steel dust caps secured with a steel wire rope lanyard;

3.2.6.4 Include a stainless steel full port FNPT ball valve;

3.2.6.5 Include a threaded stainless steel nipple NPT x 4'' long;

3.2.6.6 Include Loctite PST pipe sealant; and

3.2.6.7 Include an instruction sheet for assembly of the Water Storage Tank.

3.2.7 The Water Storage Tank must be tested at maximum capacity for the following:

3.2.7.1 Spill test angle of failure of at least 12.7°; and

3.2.7.2 Roll test angle of failure of at least 15°.

Appendix A – Water Storage Tank Mandatory Requirements

1.0 General

1.1 Introduction

This document outlines the plan for bid evaluation for any proposed alternative Water Storage Tank not included in NSN 5430-20-012-2725. It identifies the technical criteria to be evaluated.

1.2 General Form of Proposals

Proposals shall address in clearly organized, printed (i.e., not handwritten) narrative form all subjects identified in this bid evaluation plan. Responses consisting of simple statements of compliance without clear and full supporting detail could prevent proper assessment and result in proposal being rejected from further consideration.

Compliance with all requirements is required to determine the equivalence of proposed alternative Water Storage Tank.

2.0 Equivalency Evaluation

2.1 Responding to Evaluation Criteria

For each listed requirement, the bidder shall provide a response in the Bidder's Response/References" column, to clearly explain how the requirement is met, either by including the specific reference to indicate where in their proposal the information is found or including the complete response directly in that column.

Bidders shall provide the information required for each listed requirement in accordance with the method identified in the "Compliance Documentation Required" column.

2.2 Compliance Methods

The following methods, as indicated in the "Compliance Method" column of Table 1, will be used to define the minimum information required from the bidders against each requirement:

Compliance Statement (CS) - Where "Compliance Statement" is identified in the "Compliance Method" column, the Bidder shall provide a compliance statement that describes in detail how the equipment offered fully complies with the requirement. Supporting documentation is requested but not essential.

Test Report (TR) - Where "Test Report" is identified in the "Compliance Method" column, the bidder shall provide CE (or equivalent) test reports or accredited NATO/ABCA third party lab certifications.

Technical Document (TD) - Where “Technical Document” is identified in the “Compliance Method” column, the bidder shall provide a completed and detailed technical document detailing the material used and its properties.

Technical Evaluation (TE) - Where “Technical Evaluation” is identified in the “Compliance Method” column, compliance with the requirement shall be evaluated by the bid evaluation team.

2.3 Samples

If an alternative Water Storage Tank to NSN 5430-20-012-2725 is bid, one (1) sample of the proposed alternative Water Storage Tank, including all components listed at para. 2.2.1, shall be provided with each bid at closing that will be forwarded to the technical authority as part of the technical bid evaluation. If the samples are not included with the proposal, the bid will be found non-compliant.

Table 1: Water Storage Tank Compliance Table

Identifier	Characteristics of NSN 5430-20-012-2725	Requirement	Compliance Method (CS, TR, TD, TE)	Bidder's Response/Reference	Compliance (This column is for the Evaluation Team only) (C/NC)	
					"C"	"NC"
Transport Bag	1	1	**TE**			
Water Storage Tank	1	1	**TE**			
Lid	1	1	**TE**			
Fittings	2	2	**TE**			
Repair Kit	1	1	**TE**			
Instruction sheet	1	1	**TE**			
Able to compress to original factory dimension	Yes	Yes	**CS**			
Ground Sheet	L x W: 3.02m X 3.02m	L x W: ≥ 3.02m x ≥ 3.02m	**TE**			
Material	Coated Nylon IAW MIL-T-53029C	Coated Nylon IAW MIL-T-53029C	**TD**			
Belt/strap	Yes	Yes	**TE**			

Identifier	Characteristics of NSN 5430-20-012-2725	Requirement	Compliance Method (CS, TR, TD, TE)	Bidder's Response/Reference	Compliance (This column is for the Evaluation Team only) (C/NC)	
					"C"	"NC"
Volume	5691 L	≥ 5691 L	**TD**			
Rerolled Dimensions	712mm x 672mm x 1016mm.	≤712mm x ≤672mm x ≤1016mm	**TD**			
Filled Dimensions	297cm (Diameter) 129cm (Base to top of Collar)	≤ 297cm (Diameter) ≤ 129cm (Base to top of Collar)	**TD**			
Collar opening	139cm	≥139cm	**TE**			
Flotation collar, Requiring no Inflation	Yes	Yes	**TE**			
Fitted Top Zipper for Closing	Yes	Yes	**TE**			
Dry weight (no fittings)	30 kg	≤ 30 kg	**TE**			
Dry weight (w/fittings and Lid)	50 kg	≤ 50 kg	**TE**			
Handles (outside)	7	≥ 7	**TE**			

Identifier	Characteristics of NSN 5430-20-012-2725	Requirement	Compliance Method (CS, TR, TD, TE)	Bidder's Response/Reference	Compliance (This column is for the Evaluation Team only) (C/NC)	
					"C"	"NC"
Handles (Inside)	1	≥ 1	**TE**			
Drain ports (180 degrees apart)	2	2	**TE**			
Base Fabric	Nylon with a weight of at least 10 oz/sq. yd. as specified at MIL-T-53029C, test method 5041	Nylon with a weight of at least 10 oz/sq. yd. as specified at MIL-T-53029C, test method 5041	**TR**			
Finished coated Weight	32 oz./sq. yd. as specified at MIL-T-53029C specification, Test method 3154	≥ 32 oz./sq. yd. as specified at MIL-T-53029C specification, Test method 3154	**TR**			
Tearing strength	35 lbs. as specified at MIL-T-53029C test method 5134	≥ 35 lbs. as specified at MIL-T-53029C test method 5134	**TR**			
Breaking strength	500 lbs./in as specified at MIL-T-53029C test method 5102	≥500 lbs./in as specified at MIL-T-53029C test method 5102	**TR**			

Identifier	Characteristics of NSN 5430-20-012-2725	Requirement	Compliance Method (CS, TR, TD, TE)	Bidder's Response/Reference	Compliance (This column is for the Evaluation Team only) (C/NC)	
					"C"	"NC"
Weathering Resistance	After 750 hours exposure at 5% elongation (Wrap/Fill) at least 80% of initial, as specified at MIL-T-53029C test method 5804/5102	After 750 hours exposure at 5% elongation (Wrap/Fill) at least 80% of initial, as specified at MIL-T-53029C test method 5804/5102	**TR**			
Puncture resistance	150 lbs. as specified at MIL-T- 53029C test method 5120 and para 4.5.2.13	≥150 lbs. as specified at MIL-T- 53029C test method 5120 and para 4.5.2.13	**TR**			
Low Temperature crease resistance (appearance after unfolding)	Cracking, Peeling or Delamination as specified at MIL-T- 53029C para 4.5.2.14	Cracking, Peeling or Delamination as specified at MIL-T- 53029C para 4.5.2.14	**TR**			
Fungus resistance	Cracking, Blistering or Delamination coating with a retention of breaking	Cracking, Blistering or Delamination coating with a retention of breaking	**TR**			

Identifier	Characteristics of NSN 5430-20-012-2725	Requirement	Compliance Method (CS, TR, TD, TE)	Bidder's Response/Reference	Compliance (This column is for the Evaluation Team only) (C/NC)	
					"C"	"NC"
	strength of at least 70%	strength of at least 70%				
Coating adhesion	Initial -15 lbs./in. as specified at MIL-T-53029C para 4.5.2.16	Initial -15 lbs./in. as specified at MIL-T-53029C para 4.5.2.16	**TR**			
	12 lbs./in for 14 days, after immersion in distilled water at 160°F. +/- 2°F. as specified at MIL-T-53029C para 4.5.2.16.1	≥12 lbs./in for 14 days, after immersion in distilled water at 160°F. +/- 2°F. as specified at MIL-T-53029C para 4.5.2.16.1	**TR**			
	10 lbs./in for 42 days, after immersion in distilled water at 160°F. +/- 2°F. as specified at MIL-T-53029C para 4.5.2.16.1	≥10 lbs./in for 42 days, after immersion in distilled water at 160°F. +/- 2°F. as specified at MIL-T-53029C para 4.5.2.16.1	**TR**			
Inner Colour	Clear	Clear	**TE**			
Outer Colour	Tan	Tan	**TE**			
Tool Box Able to Store All Items	1	1	**CS**			

Identifier	Characteristics of NSN 5430-20-012-2725	Requirement	Compliance Method (CS, TR, TD, TE)	Bidder's Response/Reference	Compliance (This column is for the Evaluation Team only) (C/NC)	
					"C"	"NC"
From para 3.2.6.2 to 3.2.6.7						
Type F Camloc MNPT Stainless Steel Adapters Secured With a Dust Cap and Steel Wire Rope Lanyard	2	≥ 2	**CS**			
Stainless Steel Full Port FNPT Ball Valve	1	≥ 1	**CS**			
Threaded Stainless Steel Nipple NPT X 4'' Long	1	≥ 1	**CS**			
19g Loctite PST Pipe Sealant	1	≥ 1	**CS**			
Spill angle	12.7°	≥ 12.7°	**TR**			
Roll angle	15°	≥ 15°	**TR**			

Annex K – Mandatory Performance Criteria – Water Quality Analysis Reconnaissance Kit

Solicitation No.: W8476-216378/A

Date: 21-JUL-2022

TABLE OF CONTENTS

1.0 SCOPE

1.1 Purpose

1.1.1 This Annex outlines the requirements for the Advanced Sub-Unit Water Purification System (ASUWPS) Water Quality Analysis Reconnaissance Kit. Any proposed alternative Water Quality Analysis Reconnaissance Kits not included in NSN 6630-21-912-5298 must meet all requirements outlined herein to be considered equivalent.

1.2 Background

1.2.1 The ASUWPS project is procuring Water Quality Analysis Reconnaissance Kits (NSN 6630-21-912-5298) as part of the Miscellaneous Equipment Unit (MEU). In the event that the requested NSN cannot be provided, requirements and evaluation criteria for proposed equivalent Water Quality Analysis Reconnaissance Kits are needed to ensure compliance with the requirement. The Water Quality Analysis Reconnaissance Kit requirement can be found at Appendix A to W8476-216378, para. A1.2.2.15.1 and is as follows:

> "The Water Quality Analysis Reconnaissance Kit of A1.2.2.2, must be NSN 6630-21-912-5298 (or equivalent)."

1.3 Acronyms and Abbreviations

ASUWPS	Advanced Sub-Unit Water Purification System
AWR	Additional Work Request
DCSEM	Director Combat Support Equipment Management
DLP	Director Land Procurement
NSN	NATO Stock Number
PSPC	Public Services and Procurement Canada
WTS	Water Treatment System

2.0 REQUIREMENTS

2.1 General

2.1.1 Requirement A1.2.2.15.1 will be validated for compliance by:

2.1.1.1 Inspection, should the bidder choose to provide the NSN 6630-21-912-5298 Water Quality Analysis Reconnaissance Kit; or

2.1.1.2 Certification IAW Appendix A, should the requested NSN be unavailable, and an equivalent Water Quality Analysis Reconnaissance Kit is proposed.

2.1.2 If the bidder chooses to provide an equivalent Water Quality Analysis Reconnaissance Kit, they must provide DND with a completed electronic copy of Appendix A: Comparative Table clearly indicated compliance with all requirements of the Water Quality Analysis Reconnaissance Kit.

2.1.3 Compliance of proposed equivalent Water Quality Analysis Reconnaissance Kit will be evaluated IAW Appendix A. All requirements must be found compliant for an equivalent to be accepted.

2.2 Equivalency Requirements

2.2.1 The Water Quality Analysis Reconnaissance Kit must contain no less than:

2.2.1.1 One (1) Hard Case;

2.2.1.2 One (1) pH Meter;

2.2.1.3 One (1) device to Measure Free Chlorine;

2.2.1.4 One (1) system to Measure Water Hardness;

2.2.1.5 One (1) device to measure Total Dissolved Solids (TDS) ;

2.2.1.6 One (1) Turbidimeter;

2.2.1.7 One (1) Thermometer; and

2.2.1.8 One (1) Instruction Sheet.

2.2.2 Water Quality Analysis Reconnaissance Kit Dimensional Specifications:

2.2.2.1 The Water Quality Analysis Reconnaissance Kit must weigh no more than 12.7kg.

2.2.3 The Hard Case must:

2.2.3.1 Allow for the storage of all elements of the Water Quality Analysis Reconnaissance Kit listed in para 3.2.1; and

2.2.3.2 Protect the components of the Water Quality Analysis Reconnaissance Kit when not in use.

2.2.4 The pH Meter must:

2.2.4.1 Measure pH within a range of no greater than 1.00 pH unit to no less than 14.00 pH units;

2.2.4.2 Measure pH with an accuracy of no greater than ±0.02 pH units;

2.2.4.3 Measure pH with a resolution of no greater than 0.01 pH units;

2.2.4.4 Have a backlit LCD screen;

2.2.4.5 Have rechargeable/replaceable batteries;

2.2.4.6 Have an IP Rating of no less than IP67;

2.2.4.7 Have an operating temperature range of no greater than 0°C to no less than 50°C;

2.2.4.8 Have built-in diagnostics;

2.2.4.9 Have English and French Language Settings; and

2.2.4.10 Include any necessary batteries, sample cells, carrying case, lanyard/hand strap and/or other equipment required for complete operation of the device.

2.2.5 The device used to measure Free Chlorine must:

2.2.5.1 Measure Free Chlorine within a range of no greater than 0.00 mg/L Chlorine (Cl) to no less than 1.50 mg/L Chlorine (Cl);

2.2.5.2 Measure Free Chlorine with an accuracy of no greater than ±0.02 mg/L Chlorine (Cl);

2.2.5.3 Measure Free Chlorine with a resolution of no greater than 0.01 mg/L Chlorine (Cl);

2.2.5.4 Have a backlit LCD screen;

2.2.5.5 Have rechargeable/replaceable batteries;

2.2.5.6 Provide no less than 2000 tests per battery charge;

2.2.5.7 Include all required provisions to perform at least 50 tests;

2.2.5.8 Have an IP Rating of no less than IP67;

2.2.5.9 Have a maximum operating humidity of at least 90% relative humidity (non-condensing);

2.2.5.10 Have an operating temperature range of no greater than 10°C to no less than 40°C;

2.2.5.11 Have English and French Language Settings; and

2.2.5.12 Include any necessary batteries, sample cells, carrying case, lanyard/hand strap and/or other equipment required for complete operation of the device.

2.2.6 The system used to measure Water Hardness must:

2.2.6.1 Measure Total Water Hardness within a range of at most 0 mg/L Calcium Carbonate ($CaCO_3$) to at least 342 mg/L Calcium Carbonate ($CaCO_3$);

2.2.6.2 Measure Calcium Water Hardness within a range of at most 0 mg/L Calcium Carbonate ($CaCO_3$) to at least 342 mg/L Calcium Carbonate ($CaCO_3$);

2.2.6.3 Include all required provisions to perform at least 100 tests; and

2.2.6.4 Include any necessary sample cells, carrying case, lanyard/hand strap and/or other equipment required for complete operation of the device.

2.2.7 The device used to measure TDS must:

2.2.7.1 Measure Total Dissolved Solids within a range of at most 0.0 g/L Sodium Chloride (NaCl) to at least 20.0 g/L Sodium Chloride (NaCl);

2.2.7.2 Measure Total Dissolved Solids with an accuracy of at most ±0.1 g/L as Sodium Chloride (NaCl);

2.2.7.3 Measure Total Dissolved Solids with a resolution of at most 0.1 g/L as Sodium Chloride (NaCl);

2.2.7.4 Have a backlit LCD screen;

2.2.7.5 Have rechargeable/replaceable batteries;

2.2.7.6 Have an IP Rating of no less than IP67;

2.2.7.7 Have English and French Language Settings;

2.2.7.8 Have a maximum operating humidity of at least 80% relative humidity (non-condensing);

2.2.7.9 Have an operating temperature range of at most 0°C to at least 50°C;

2.2.7.10 Include any necessary batteries, sample cells, carrying case, lanyard/hand strap and/or other equipment required for complete operation of the device.

2.2.8 The Turbidimeter must:

2.2.8.1 Measure Turbidity within a range of at most 0 to at least 1000 NTU (Nephelometric Turbidity Units);

2.2.8.2 Measure Turbidity with an accuracy of at most ±1 NTU;

2.2.8.3 Measure Turbidity with a resolution of at most 1 NTU;

2.2.8.4 Have a backlit LCD screen;

2.2.8.5 Have rechargeable/replaceable batteries;

2.2.8.6 Have an IP Rating of no less than IP67;

2.2.8.7 Have English and French Language Settings;

2.2.8.8 Have a maximum operating humidity of at least 90% relative humidity (non-condensing);

2.2.8.9 Have an operating temperature range of at most 0°C to at least 50°C; and

2.2.8.10 Include any necessary batteries, sample cells, carrying case, lanyard/hand strap and/or other equipment required for complete operation of the device.

2.2.9 The Thermometer must:

2.2.9.1 Measure Temperature within a range of at most 0°C to at least 50°C;

2.2.9.2 Measure Temperature with an accuracy of at most ±0.2°C.

2.2.9.3 Measure Temperature with a resolution of at most 0.2°C;

2.2.9.4 Have a backlit LCD screen;

2.2.9.5 Have rechargeable/replaceable batteries;

2.2.9.6 Have an IP Rating of no less than IP67;

2.2.9.7 Have English and French Language Settings;

2.2.9.8 Have a maximum operating humidity of at least 90% relative humidity (non-condensing);

2.2.9.9 Have an operating temperature range of at most 0°C to at least 50°C;

2.2.9.10 Include any necessary batteries, sample cells, carrying case, lanyard/hand strap and/or other equipment required for complete operation of the device

2.2.10 The Instruction Sheet must provide all necessary instructions for complete operation of all elements of the Water Quality Analysis Reconnaissance Kit outlined in para 2.2.1.

Appendix A – Water Quality Analysis Reconnaissance Kit Mandatory Requirements

1.0 General

1.1 Introduction

This document outlines the plan for bid evaluation for any proposed alternative Water Quality Analysis Reconnaissance Kits not included in NSN 6630-21-912-5298. It identifies the technical criteria to be evaluated.

1.2 General Form of Proposals

Proposals shall address in clearly organized, printed (i.e., not handwritten) narrative form all subjects identified in this bid evaluation plan. Responses consisting of simple statements of compliance without clear and full supporting detail could prevent proper assessment and result in proposal being rejected from further consideration.

Compliance with all requirements is required to determine the equivalence of proposed alternative Water Quality Analysis Reconnaissance Kits.

2.0 Equivalency Evaluation

2.1 Responding to Evaluation Criteria

For each listed requirement, the bidder shall provide a response in the Bidder's Response/References" column, to clearly explain how the requirement is met, either by including the specific reference to indicate where in their proposal the information is found or including the complete response directly in that column.

Bidders shall provide the information required for each listed requirement in accordance with the method identified in the "Compliance Documentation Required" column.

2.2 Compliance Methods

The following methods, as indicated in the "Compliance Method" column of Table 1, will be used to define the minimum information required from the bidders against each requirement:

Compliance Statement (CS) - Where "Compliance Statement" is identified in the "Compliance Method" column, the Bidder shall provide a compliance statement that describes in detail how the equipment offered fully complies with the requirement. Supporting documentation is requested but not essential.

Test Report (TR) - Where "Test Report" is identified in the "Compliance Method" column, the bidder shall provide CE (or equivalent) test reports or accredited NATO/ABCA third party lab certifications.

Technical Document (TD) - Where “Technical Document” is identified in the “Compliance Method” column, the bidder shall provide a completed and detailed technical document detailing the material used and its properties.

Technical Evaluation (TE) - Where “Technical Evaluation” is identified in the “Compliance Method” column, compliance with the requirement shall be evaluated by the bid evaluation team.

2.3 Samples

If an alternative Water Quality Analysis Reconnaissance Kit to NSN 6630-21-912-5298 is bid, one (1) sample of the proposed alternative Water Quality Analysis Reconnaissance Kit, including all components listed at para. 2.2.1, shall be provided with each bid at closing that will be forwarded to the technical authority as part of the technical bid evaluation. If the samples are not included with the proposal, the bid will be found non-compliant.

Table 1: Water Quality Analysis Reconnaissance Kit Compliance Table

Identifier	Characteristics of NSN 6630-21-912-5298	Requirement	Compliance Method (CS, TR, TD, TE)	Bidder's Response/Reference	Compliance (This column is for the Evaluation Team only) (C/NC)	
					"C"	"NC
Hard Case	1	1	**TE**			
pH Meter	1	1	**TE**			
Device to Measure Free Chlorine	1	1	**TE**			
System to Measure Water Hardness	1	1	**TE**			
Device to Measure Total Dissolved Solids (TDS)	1	1	**TE**			
Turbidimeter	1	1	**TE**			
Thermometer	1	1	**TE**			
Instruction Sheet	1	1	**TE**			
Water Quality Analysis Kit Total Weight	12.7kg	≤ 12.7kg	**TD**			
Hard Case; Allows for Storage of all elements of Water Quality Analysis Kit	Yes	Yes	**TE**			

Identifier	Characteristics of NSN 6630-21-912-5298	Requirement	Compliance Method (CS, TR, TD, TE)	Bidder's Response/Reference	Compliance (This column is for the Evaluation Team only) (C/NC)	
					"C"	"NC
Hard Case; Protects the components of the Water Quality Analysis Kit when not in use	Yes	Yes	**TE**			
pH Meter Range	1.00 to 14.00 pH units	≤1.00 to ≥14.00 pH units	**TD**			
pH Meter Accuracy	±0.02 pH units	≤ ±0.02 pH units	**TD**			
pH Meter Resolution	0.01 pH units	≤ 0.01 pH units	**TD**			
pH Meter Backlit LCD screen	Yes	Yes	**TE**			
pH Meter Rechargeable/Replaceable Batteries	Yes	Yes	**CS**			
pH Meter IP Rating	IP67	≥ IP67	**TD**			
pH Meter Operating Temperature Range	0°C to 50°C	≤ 0°C to ≥ 50°C	**TD**			
pH Meter built-in diagnostics	Yes	Yes	**TE**			
pH Meter English and French Language Settings	Yes	Yes	**TE**			

Identifier	Characteristics of NSN 6630-21-912-5298	Requirement	Compliance Method (CS, TR, TD, TE)	Bidder's Response/Reference	Compliance (This column is for the Evaluation Team only) (C/NC)	
					"C"	"NC
pH Meter Relevant Operating Equipment Included	Yes	Yes	**TE**			
Device used to Measure Free Chlorine Range	0.00 to 1.50 mg/L Chlorine (Cl)	0.00 to ≥1.50 mg/L Chlorine (Cl)	**TD**			
Device used to Measure Free Chlorine Accuracy	±0.02 mg/L Chlorine (Cl)	≤ ±0.02 mg/L Chlorine (Cl)	**TD**			
Device used to Measure Free Chlorine Resolution	0.01 mg/L Chlorine (Cl)	≤ 0.01 mg/L Chlorine (Cl)	**TD**			
Device used to Measure Free Chlorine Backlit LCD screen	Yes	Yes	**TE**			
Device used to Measure Free Chlorine: Has Rechargeable/Replaceable Batteries	Yes	Yes	**CS**			
Device used to Measure Free Chlorine Number of Tests per Charge	2000 tests	≥ 2000 tests	**TD**			
Device used to Measure Free Chlorine: Number of Tests Able	50 tests	≥ 50 tests	**TD**			

Identifier	Characteristics of NSN 6630-21-912-5298	Requirement	Compliance Method (CS, TR, TD, TE)	Bidder's Response/Reference	Compliance (This column is for the Evaluation Team only) (C/NC)	
					"C"	"NC
to be Performed with Included Testing Provisions						
Device used to Measure Free Chlorine IP Rating	IP67	≥ IP67	**TD**			
Device used to Measure Free Chlorine Maximum Operating Humidity	90% relative humidity (non-condensing)	≥90% relative humidity (non-condensing)	**TD**			
Device used to Measure Free Chlorine Operating Temperature Range	10°C to 40°C	≤10°C to ≥40°C	**TD**			
Device used to Measure Free Chlorine English and French Language Settings	Yes	Yes	**TD**			
Device used to Measure Free Chlorine Relevant Operating Equipment Included	Yes	Yes	**TE**			
System Used to Measure Water Hardness; Total Water Hardness Measurement Range	0 to 342 mg/L Calcium Carbonate ($CaCO_3$);	0 to ≥ 342 mg/L Calcium Carbonate ($CaCO_3$)	**TD**			

Identifier	Characteristics of NSN 6630-21-912-5298	Requirement	Compliance Method (CS, TR, TD, TE)	Bidder's Response/Reference	Compliance (This column is for the Evaluation Team only) (C/NC)	
					"C"	"NC
System Used to Measure Water Hardness; Calcium Water Hardness Measurement Range	0 to 342 mg/L Calcium Carbonate ($CaCO_3$);	0 to ≥ 342 mg/L Calcium Carbonate ($CaCO_3$)	**TD**			
System Used to Measure Water Hardness; Number of Tests Able to be Performed with Included Testing Provisions	100 tests	≥ 100 tests	**TD**			
System Used to Measure Water Hardness; Relevant Operating Equipment Included	Yes	Yes	**TE**			
Total Dissolved Solids (TDS) Meter Range	0.0 to 20.0 g/L as Sodium Chloride (NaCl)	0.0 to ≥ 20.0 g/L as Sodium Chloride (NaCl)	**TD**			
Total Dissolved Solids (TDS) Meter Accuracy	±0.1 g/L as Sodium Chloride (NaCl)	≤ ±0.1 g/L as Sodium Chloride (NaCl)	**TD**			
Total Dissolved Solids (TDS) Meter Resolution	0.1 g/L as Sodium Chloride (NaCl	≤ 0.1 g/L as Sodium Chloride (NaCl	**TD**			

Identifier	Characteristics of NSN 6630-21-912-5298	Requirement	Compliance Method (CS, TR, TD, TE)	Bidder's Response/Reference	Compliance (This column is for the Evaluation Team only) (C/NC)	
					"C"	"NC
Total Dissolved Solids (TDS) Meter Backlit LCD screen	Yes	Yes	**TE**			
Total Dissolved Solids (TDS) Meter Rechargeable/Replaceable Batteries	Yes	Yes	**CS**			
Total Dissolved Solids (TDS) Meter IP Rating	IP67	≥ IP67	**TD**			
Total Dissolved Solids (TDS) Meter English and French Language Settings	Yes	Yes	**TE**			
Total Dissolved Solids (TDS) Meter Maximum Operating Humidity	80% relative humidity (non-condensing)	≥ 80% relative humidity (non-condensing)	**TD**			
Total Dissolved Solids (TDS) Meter Operating Temperature Range	0°C to 50°C	≤ 0°C to ≥ 50°C	**TD**			
Total Dissolved Solids (TDS) Meter Relevant Operating Equipment Included	Yes	Yes	**TE**			
Turbidimeter Range	0 to 1000 NTU	0 to ≥ 1000 NTU	**TD**			

Identifier	Characteristics of NSN 6630-21-912-5298	Requirement	Compliance Method (CS, TR, TD, TE)	Bidder's Response/Reference	Compliance (This column is for the Evaluation Team only) (C/NC)	
					"C"	"NC
Turbidimeter Accuracy	±1 NTU	≤ ±1 NTU	**TD**			
Turbidimeter Resolution	1 NTU	≤ 1 NTU	**TD**			
Turbidimeter Meter Backlit LCD screen	Yes	Yes	**TE**			
Turbidimeter Rechargeable/Replaceable Batteries	Yes	Yes	**CS**			
Turbidimeter IP Rating	IP67	≥ IP67	**TD**			
Turbidimeter English and French Language Settings	Yes	Yes	**TD**			
Turbidimeter Meter Maximum Operating Humidity	90% relative humidity (non-condensing)	≥ 90% relative humidity (non-condensing)	**TD**			
Turbidimeter Operating Temperature Range	0°C to 50°C	≤ 0°C to ≥ 50°C	**TD**			
Turbidimeter Relevant Operating Equipment Included	Yes	Yes	**TE**			

Identifier	Characteristics of NSN 6630-21-912-5298	Requirement	Compliance Method (CS, TR, TD, TE)	Bidder's Response/Reference	Compliance (This column is for the Evaluation Team only) (C/NC)	
					"C"	"NC
Thermometer Measurement Range	0°C to 50°C	≤ 0°C to ≥ 50°C	**TD**			
Thermometer Accuracy	±0.2°C	≤ ±0.2°C	**TD**			
Thermometer Resolution	0.2°C	≤ 0.2°C	**TD**			
Thermometer Backlit LCD screen	Yes	Yes	**TE**			
Thermometer Rechargeable/Replaceable Batteries	Yes	Yes	**TD**			
Thermometer IP Rating	IP67	≥ IP67	**TD**			
Thermometer English and French Language Settings	Yes	Yes	**TD**			
Thermometer Maximum Operating Humidity	90% relative humidity (non-condensing)	≥ 90% relative humidity (non-condensing)	**TD**			
Thermometer Operating Temperature Range	0°C to 50°C	≤ 0°C to ≥ 50°C	**TD**			
Thermometer Relevant Operating Equipment Included	Yes	Yes	**CS**			

Identifier	Characteristics of NSN 6630-21-912-5298	Requirement	Compliance Method (CS, TR, TD, TE)	Bidder's Response/Reference	Compliance (This column is for the Evaluation Team only) (C/NC)	
					"C"	"NC
Instruction Sheet Which Provides All Necessary Instructions for Complete Operation of All Elements of the Water Quality Analysis Kit	Yes	Yes	**TE**			

STATEMENT OF WORK

FOR THE

WATER TREATMENT SYSTEM

TABLE OF CONTENTS

1.0 SCOPE

1.1 Purpose

1.1.1 The purpose of this Statement of Work (SOW) is to specify the requirements of a Water Treatment System (WTS) for the Canadian Armed Forces (CAF). The WTS is a part of the Advanced Sub-unit Water Purification System (ASUWPS) Project.

1.1.2 The main deliverables of the WTS include:

1.1.2.1 Water Treatment Units (WTU);

1.1.2.2 Miscellaneous Equipment Units (MEU);

1.1.2.3 Water Storage Units (WSU);

1.1.2.4 Trailers; and

1.1.2.5 Arctic Sustainment Units (ASU).

1.2 Background

1.2.1 Water is an essential combat supply and the lessons learned from operations over the last several decades has proven that it is not prudent to trust local water sources. These operations have been characterized by large geographic areas of operation with dispersed troops necessitating the requirement for a water purification system at the sub-unit level (up to 250 personnel). The existing sub-unit water purification system is obsolete and no longer supportable. Additionally, insufficient numbers of systems were held in the inventory to equip both Regular and Reserve Force units. There is an urgent need to deliver a new sub-unit water purification system in sufficient numbers to support the CAF.

1.3 Intended Use

1.3.1 The WTS is intended to dramatically improve the ability of the CAF to provide drinking water for its soldiers at the sub-unit level. It will replace the existing obsolete sub-unit water purification systems and increase the overall number of systems to fully enable Regular and Reserve Force units to sustain themselves in domestic and international operations. It will be used across the spectrum of operations including war, peacekeeping and humanitarian assistance.

1.3.2 The WTS is intended to be a self-contained and rapidly deployable water purification and treatment system. To increase operational flexibility and ease of deployment, the principal components of the WTS, namely the WTU, MEU, WSU and ASU, will be packaged in two different size of ISO containers, BICON and QUADCON, (Half and quarter length of the standard 20-foot-long ISO container). The Trailer is intended to transport up to two (2) QUADCON or one (1) BICON ISO containers.

1.4 Acronyms and Abbreviations

ABL	Allocated Baseline
ABS/EBS	Anti-lock Braking System/Electronic Braking System
ASU	Arctic Sustainment Unit
ATP&P	Acceptance Test Plan & Procedures
ATR	Acceptance Test Report
AV	Acceptance Verification
AWR	Additional Work Request
CA	Contracting Authority
BIC	International Container Bureau
BICON	Double Container
CAF	Canadian Armed Forces
CARC	Chemical Agent Resistant Coating
CDR	Critical Design Review
CDRL	Contract Data Requirements List
CFTO	Canadian Forces Technical Orders
CFU	Colony Forming Unit
CI	Configuration Item
CM	Centimetre
CM	Configuration Management
CMS	Contract Master Schedule
CMVSS	Canadian Motor Vehicle Safety Standards
CNCGL	Controlled & Non-Controlled Goods List
CSA	Canadian Standards Association
CSA	Configuration Status Accounting
CSC	Convention for Safe Containers
CSR	Contract Status Report
CWBS	Contract Work Breakdown Structure
CWS	Cold Weather Shelter
DBP	Disinfection by-products
DID	Data Item Description
DMC	Demilitarization Code
DND	Department of National Defence
DOC	Dissolve Organic Carbon
DQA	Directorate of Quality Assurance
EBS	Equipment Breakdown Structure
CNCGL	Controlled & Non-Controlled Goods List

ECP	Engineering Change Proposal
EDAL	Engineering Drawings and Associated Lists
ECCN	Export Control Classification Number
EEA	Equipment Environmental Assessment
EHS	Environmental Health and Safety
FBL	Functional Baseline
FMVSS	Federal Motor Vehicle Safety Standards
FSR	Field Service Representative
FSS	Fleet Support Spares
FPAV	First Production Article Verification
GCDWQ	Guideline for Canadian Drinking Water Quality
GFE	Government Furnished Equipment
GTW	Gross Trailer Weight
HPP	High Pressure Pump
IBC	Intermediate Bulk Container
IBC LINER	Intermediate Bulk Container Liner
ILAC MRA	International Laboratory Accreditation Cooperation Mutual Recognition Arrangement
ILS	Integrated Logistics Support
ILSM	Integrated Logistics Support Manager
IP	Intellectual Property
IPC	Initial Provisioning Conference
IPGC	Initial Provisioning Guidance Conference
IPM	Illustrated Parts Manual
ISO	International Standards Organization
ISO/IEC	International Organization for Standardization / International Electrotechnical Commission
IUT	Item Under Test
ITAR	International Traffic in Arms Regulations
LIS	List of Items Supported
MAC	Maximum Allowable Concentration
MEU	Miscellaneous Equipment Unit
MIDS	Material Identification Data Set
MilCOTS	Militarized Commercial of-the-Shelf
MIL-STD	United States Department of Defense Military Standard
MRC	Maximum Repair Cost
MSR	Mandated System Review

MSVS	Medium Support Vehicle System
MVSA	Motor Vehicle Safety Act
MVSR	Motor Vehicle Safety Regulations
NATO	North Atlantic Treaty Organization
NDID	National Defence Index of Documentation
NEMA	National Electrical Manufacturers Association
NRC	National Research Council of Canada
NSN	NATO Stock Number
NSF	National Sanitation Foundation
NTU	Nephelometric Turbidity Units
OEM	Original Equipment Manufacturer
PBL	Product Baseline
PCA	Physical Configuration Audit
PDR	Preliminary Design Review
PFU	Plaque Forming Unit
PMP	Project Management Plan
POL	Petroleum, Oils & Lubricants
PPB	Provisioning Parts Breakdown
PPM	Part-per-Million
PSPC	Public Services and Procurement Canada
QAR	Quality Assurance Representative
QUADCON	Quadruple Container
QMS	Quality Management System
RCE	Repair Cost Estimate
RF	Radio Frequency
RMS	Root Mean Square
R&M	Reliability and Maintainability
R&O	Repair and Overhaul
RTVM	Requirements Traceability Verification Matrix
SAE	Society of Automotive Engineers
SE	Systems Engineering
SEMP	System Engineering Management Plan
SMP	Standard Military Pattern
SOW	Statement of Work
SPTD	Supplementary Provisioning Technical Documentation
STANAG	Standardization Agreement
STTE	Special Tools and Test Equipment

TA	Technical Authority
TB	Thermal Blanket
TDS	Total Dissolved Solids
TIR	"Transports internationaux routiers" (International Road Transports)
TLAD	Top Level Assembly Drawing
TRR	Test Readiness Review
USML	United States Munitions List
WSU	Water Storage Unit
WTS	Water Treatment System
WTU	Water Treatment Unit

2.0 APPLICABLE DOCUMENTS

2.1 References

2.1.1 Whereas mentioned, the following Standards must be used for the preparation of deliverables to the extent specified in this SOW.

GOVERNMENT FURNISHED INFORMATION

REFERENCE NUMBER	PROMULGATION DATE	REFERENCE TITLE
C-01-100-100/AG-008	2017-11-02	WRITER'S GUIDE FOR TECHNICAL DOCUMENTATION
C-02-007-000/AG-001	2016-01-01	CONTROLLED TECHNOLOGY ACCES AND TRANSFER (CTAT) MANUAL
C-30-K77-000/MA-000	2021-02-16	DATA SUMMARY MSVS SMP CARGO VARIANT, TRUCK, 8X8, 9.5 TON, MSVS SMP, ALL VARIANTS
C-30-K77-000/MB-000	2018-09-21	TRUCK, LOAD HANDLING SYSTEM, 9.5 TON, 8X8, MSVS SMP
C-32-F40-000/MB-Z01	2012-04-16	OPERATOR'S INSTRUCTIONS - MILITARY SUPPLEMENT, TRUCK, 8 TONNES, 6X6, MSVS MILCOTS, NAVISTAR 7400 SERIES (ALL VARIANTS)
C-90-242-000/NJ-004	2017-01-27	DEPARTMENT OF DEFENSE STANDARD PRACTICE INSPECTION CRITERIA FOR INTERNATIONAL ORGANIZATION FOR STANDARDIZATION (ISO) CONTAINERS AND DEPARTMENT OF DEFENSE STANDARD FAMILY OF ISO SHELTERS
D-01-100-204/SF-000	2000-10-31	SPECIFICATION - PREPARATION OF PREVENTIVE MAINTENANCE INSTRUCTIONS
D-01-100-205/SF-000	2000-10-31	SPECIFICATION - PREPARATION OF CORRECTIVE MAINTENANCE INSTRUCTION
D-01-100-207/SF-002	1996-07-12	SPECIFICATION - PREPARATION OF INTERIM ILLUSTRATED PARTS MANUALS FOR LAND EQUIPMENTS
D-01-100-211/SF-000	1991-06-01	SPECIFICATION – PRESERVATION, STORAGE AND HANDLING INSTRUCTION
D-01-100-214/SF-000	2002-05-01	SPECIFICATION FOR PREPARATION OF PROVISIONING DOCUMENTATION FOR CANADIAN FORCES EQUIPMENT
D-01-300-100/SG-000	1992-02-01	STANDARD FOR SPECIFICATION PREPARATION - TECHNICAL CONTENT
D-01-400-001/SG-000	1979-04-02	STANDARD - ENGINEERING DRAWING PRACTICES FOR CLASS 1 DRAWINGS AND TECHNICAL DATA LISTS
D-01-400-002/SF-000	1983-11-30	SPECIFICATION FOR LEVELS OF ENGINEERING DRAWINGS AND ASSOCIATED LISTS

D-02-002-001/SG-001	2003-04-01	STANDARD – IDENTIFICATION MARKING OF CANADIAN MILITARY PROPERTY
D-02-006-008/SG-001	1985-05-16	THE DESIGN CHANGE, DEVIATION AND WAIVER PROCEDURE
D-80-001-055/SF-001	2005-08-01	SPECIFICATION FOR LABEL, CLOTHING AND EQUIPMENT
DCIEM 98-CR-15	1998-03	ANTHROPOMETRIC SURVEY OF THE LAND FORCES
D-LM-008-001/SF-001	1983-02-03	METHODS OF PACKAGING
D-LM-008-002/SF-001	1991-08-01	SPECIFICATION FOR MARKING FOR STORAGE AND SHIPMENT
D-LM-008-011/SF-001	1988-11-10	PREPARATION AND USE OF PACKAGING REQUIREMENTS CODES
D-LM-008-036/SF-000	2013-12-01	DND MINIMUM REQUIREMENT FOR MANUFACTURER'S STANDARD PACK

COMMERCIALLY AVAILABLE

REFERENCE NUMBER	PROMULGATION DATE	REFERENCE TITLE
ACMP-2009	2017	GUIDANCE ON CONFIGURATION MANAGEMENT
AECTP-230 ED.1	2009-05-07	CLIMATIC CONDITIONS
ANSI/EIA-649-C	2019	CONFIGURATION MANAGEMENT STANDARD
ASME Y14.100		ENGINEERING DRAWING PRACTICES
ASME Y14.24		TYPES AND APPLICATIONS OF ENGINEERING DRAWINGS
ASME Y14.34M		ASSOCIATED LISTS
ASTM D975-15A	2015-06-01	STANDARD SPECIFICATION FOR DIESEL FUEL OILS
CANADA LABOUR CODE	PART II, 2021	OCCUPATIONAL HEALTH AND SAFETY
CAN/CGSB-43.146-2016	APRIL 2016	DESIGN, MANUFACTURE AND USE OF INTERMEDIATE BULK CONTAINERS FOR THE TRANSPORTATION OF DANGEROUS GOODS
CAO 21-04	2014	PAINT AND MARKING POLICY FOR LAND EQUIPMENT, DLR/DGLEPM
CSA C22.1, ED.25	2021	CANADIAN ELECTRICAL CODE, PART I, SAFETY STANDARD FOR ELECTRICAL INSTALLATIONS
CSA C22.2, ED.11	2020	CANADIAN ELECTRICAL CODE, PART II, GENERAL
C.R.C., c. 1038	2019	TRANSPORT CANADA, MOTOR VEHICLE SAFETY REGULATIONS
CSC 1972	2014	INTERNATIONAL CONVENTION FOR SAFE CONTAINERS
DFO / 5080	1995-03	FRESHWATER INTAKE FISH SCREEN GUIDELINE
SAE AMS-STD-595	2017-02-14	COLORS USED IN GOVERNMENT PROCUREMENT

HEALTH CANADA	2020-01	GUIDELINES FOR CANADIAN DRINKING WATER QUALITY, GUIDELINE TECHNICAL DOCUMENT
HEALTH CANADA	2020-09	GUIDELINES FOR CANADIAN DRINKING WATER QUALITY, SUMMARY TABLE
IEEE 15288.1	2014	IEEE STANDARD FOR APPLICATION OF SYSTEMS ENGINEERING ON DEFENSE PROGRAMS
IEEE 15288.2	2014	IEEE STANDARD FOR TECHNICAL REVIEWS AND AUDITS ON DEFENSE PROGRAMS
ISO/IEC 17025	2017	GENERAL REQUIREMENTS FOR THE COMPETENCE OF TESTING AND CALIBRATION LABORATORIES
ISO 6346	1995	FREIGHT CONTAINERS -- CODING, IDENTIFICATION AND MARKING
ISO 7638-1 ED.3	2018-05	ROAD VEHICLES — CONNECTIORS FOR THE ELECTRICAL CONNECTION OF TOWING AND TOWED VEHICLES
ISO 668	2013-08-01	SERIES 1 FREIGHT CONTAINERS – CLASSIFICATION, DIMENSIONS AND RATINGS
MIL-DTL-53072F	2017-05-31	CHEMICAL AGENT RESISTANT COATING (CARC)
MIL-PRF-24667C, AM1	2018-03-27	COATING SYSTEM, NON-SKID
MIL-STD-188-124B	2000-12-18	GROUNDING, BONDING AND SHIELDING
MIL-STD-209K	2005-02-22	DEPARTMENT OF DEFENSE INTERFACE STANDARD FOR LIFTING AND TIEDOWN PROVISIONS
MIL-STD-810H,	2019-01-31	ENVIRONMENTAL ENGINEERING CONSIDERATIONS AND LABORATORY TESTS
MIL-STD-1179E	2011-06-13	LAMPS, REFLECTORS AND ASSOCIATED SIGNALING EQUIPMENT FOR MILITARY VEHICLES
MIL-STD-1366E	2006-10-31	INTERFACE STANDARD FOR TRANSPORTABILITY CRITERIA
MIL-STD-1474E	2015-04-15	DESIGN CRITERIA STANDARD NOISE LIMITS
MIL-STD-3037	2017-01-27	INSPECTION CRITERIA FOR INTERNATIONAL ORGANIZATION FOR STANDARDIZATION (ISO) CONTAINERS AND DEPARTMENT OF DEFENSE STANDARD FAMILY OF ISO SHELTERS
MIL-STD-31000B	2018-10-31	TECHNICAL DATA PACKAGES
NEMA IEC 60529, ED2.2	2013-08	DEGREES OF PROTECTION PROVIDED BY ENCLOSURES (IP CODE)
NPC	2015	NATIONAL PLUMBING CODE OF CANADA
NSF/ANSI 61	2018	DRINKING WATER SYSTEM COMPONENTS – HEALTH EFFECTS
R.S., 1985, C. H-3	1985	HAZARDOUS PRODUCTS ACT

SAE J2180-2011	2011	TILT TABLE PROCEDURE FOR MEASURING THE STATIC ROLLOVER THRESHOLD FOR HEAVY TRUCKS
SOR/2003-289		FEDERAL HALOCARBON REGULATIONS
SOR/2008-273		PCB REGULATIONS
SOR/2012-285		PROHIBITION OF CERTAIN TOXIC SUBSTANCES REGULATIONS
SOR/2014-254		PRODUCTS CONTAINING MERCURY REGULATIONS
SOR/2016-137		OZONE-DEPLETING SUBSTANCES AND HALOCARBON ALTERNATIVES REGULATIONS
SOR/2018-196		PROHIBITION OF ASBESTOS AND PRODUCTS CONTAINING ASBESTOS REGULATIONS
STANAG 2601 ED.3	1996-05-31	STANDARDIZATION OF ELECTRICAL SYSTEMS IN TACTICAL LAND VEHICLES
STANAG 2604 ED.3	1986-02-12	BREAKING SYSTEMS BETWEEN TRACTOR, DRAW-BAR TRAILER AND SEMI-TRAILER EQUIPMENT COMBINATIONS FOR MILITARY USE
STANAG 2805 ED.5	1997-10-07	FORDING AND FLOTATION REQUIREMENTS FOR COMBAT AND SUPPORT GROUND VEHICLES
STANAG 4062 ED.6	2016-05-27	SLINGING AND TIE-DOWN FACILITIES FOR LIFTING AND TYING DOWN MILITARY EQUIPMENT
STANAG 4101 ED.2	2000-02-21	TOWING ATTACHMENTS
STANAG 4478 ED.1	2004-10-08	EMERGENCY TOWING AND RECOVERY FACILITIES FOR TACTICAL LAND VEHICLES
STANAG 4381 ED.1	1994-07-08	BLACKOUT LIGHTING SYSTEMS FOR TACTICAL LAND VEHICLES
Z234.1-00		CANADIAN METRIC PRACTICES GUIDE

2.2 Order of Precedence

2.2.1 In the event of conflict between the content in this SOW and the referenced documents, the content of this SOW will take precedence.

3.0 PROJECT MANAGEMENT

3.1 Project Management Program

3.1.1 The Contractor must designate a Project Manager with the responsibilities to coordinate, execute, and manage the Contractor's project management activities for the Contract. The Contractor's Project Manager must have the total responsibility for all works required under the Contract.

3.1.2 The Contractor's Project Manager must be the primary point of contact between the Contractor, the DND Technical Authority (TA), and the PSPC Contracting Authority (CA) for all issues related to the Contract.

3.2 Project Management Plan

3.2.1 The Contractor must provide a Project Management Plan (PMP) IAW Contract Data Requirement List (CDRL) WTS-PM-001 at Appendix A2.3 to ANNEX A1 (pg. 118) and its associated Data Item Deliverable (DID) WTS-PM-001 at Appendix A3.3 to ANNEX A1 (pg. 160).

3.2.2 The Contractor must manage its program of activities under the contract IAW the approved PMP.

3.3 Contract Master Schedule

3.3.1 The Contractor must provide a Contract Master Schedule (CMS) IAW CDRL WTS-PM-002 at Appendix A2.4 to ANNEX A1 (pg. 119) and its associated Data Item Deliverable (DID) WTS-PM-002 at Appendix A3.4 to ANNEX A1 (pg.162).

3.3.2 The Contractor must use the approved CMS as the primary schedule for managing the project.

3.3.3 The Contractor may amend the approved CMS, without first obtaining the TA's and Contracting Authority's approval, as long as:

3.3.3.1 Payments under the contract are not affected;

3.3.3.2 The milestones dates are not affected; and

3.3.3.3 The ability of Canada to meet its obligations under the contract is not affected.

3.4 Contract Work Breakdown Structure

3.4.1 The Contractor must provide a Contractor Work Breakdown Structure (CWBS) IAW CDRL WTS-PM-003 at Appendix A2.5 to ANNEX A1 (pg. 120) and its associated Data Item Deliverable (DID) WTS-PM-003 at Appendix A3.5 to ANNEX A1 (pg. 164).

3.4.2 The Contractor must manage the contract IAW the Approved CWBS.

3.4.3 The Contractor may amend the approved CWBS, without first obtaining the TA's approval, as long as:

3.4.3.1 All elements affected by the amendment are below the reporting level;

3.4.3.2 The amendments are consistent with the approved CWBS; and

3.4.3.3 The TA is notified within 14 calendar days of the changes being made.

3.5 Contract Status Report

3.5.1 The Contractor must provide a Contract Status Report (CSR) IAW CDRL WTS-PM-004 at Appendix A2.6 to ANNEX A1 (pg. 121) and its associated DID WTS-PM-004 at Appendix A3.6 to ANNEX A1 (pg. 165).

3.6 Project Meetings

3.6.1 Meeting Organization and Coordination

3.6.1.1 The Contractor's Project Manager must be present at the Kick-off Meeting, and at other meetings when requested by Canada. If the Project Manager does not have final approval authority for decision making and changes, then the person that has that final approval authority must also be present.

3.6.2 Kick-off Meeting

3.6.2.1 The Contractor must hold and chair a Kick-off Meeting, at the Contractor's facility, within 42 calendar days after contract award to review and secure a common understanding of the following:

3.6.2.1.1 The requirements of the Contract;

3.6.2.1.2 The requirements of the SOW;

3.6.2.1.3 General overview of the project, risks, schedule and communication channels to follow, and

3.6.2.1.4 Other contractual and programmatic issues associated with the project as agreed to between the TA, CA and the Contractor.

3.6.2.2 During the Kick-off Meeting, the Contractor must provide a Top Level Assembly Drawing (TLAD) IAW CDRL WTS-ILS-201 at Appendix A2.17 to this ANNEX A1 (pg. 132) and its associated DID WTS-ILS-201 at Appendix A3.17 to this ANNEX A1 (pg. 191).

3.6.2.3 Refer to Meeting Documentation requirements found at ANNEX A1 para. 3.6.6.

3.6.3 Systems Engineering (SE) Meeting

3.6.3.1 The Contractor must hold and chair the first SE meeting following the closure of the Kick-Off Meeting, in order to:

3.6.3.1.1 Review and secure a common understanding of the requirements expressed in the SE CDRLs and DIDs, the Technical Specification(s), and other referenced specifications; and

3.6.3.1.2 Discuss possible design strategies and concepts.

3.6.3.2 If the preliminary design of the WTS, based on the requirements derived from the Technical Specification(s), is sufficiently advanced and the entry criteria for

the Preliminary Design Review (PDR) have been met, as described in ANNEX A1 section 4.3.1, the Contractor can request approval for the PDR occurring along with this meeting.

3.6.3.3 Refer to Meeting Documentation requirements found at ANNEX A1 para. 3.6.6.

3.6.4 Integrated Logistics Support (ILS) Meeting

3.6.4.1 The Contractor must hold and chair an ILS Meeting following the closure of the SE Meeting, in order to:

3.6.4.1.1 Review and secure a common understanding of the requirements expressed in the ILS CDRLs and DIDs, DND Canadian Forces Technical Orders (CFTO)s and specifications; and,

3.6.4.1.2 Discuss possible sparing strategies and concepts, Lowest Replaceable Units (LRUs), and lines of maintenance.

3.6.4.2 Refer to Meeting Documentation requirements found at ANNEX A1 para. 3.6.6.

3.6.5 Other meetings

3.6.5.1 The Contractor must hold and chair (at the Contractor's facility) additional SE meetings as described in ANNEX A1 para. 4.2.4.

3.6.5.2 The Contractor and the TA may schedule informal reviews, such as teleconferences, video conferences, briefings and technical interchange meetings, to help achieve the requirements of the Contract.

3.6.6 Meeting Documentation

3.6.6.1 The Contractor must prepare and deliver a meeting agenda for all formal meetings and conferences, and prepare and deliver the meeting minutes afterwards.

3.6.6.1.1 The Contractor must provide the Meeting Agenda(s) IAW CDRL WTS-PM-005 at Appendix A2.7 to ANNEX A1 (pg. 122) and its associated DID WTS-PM-005 at Appendix A3.7 to ANNEX A1 (pg. 167).

3.6.6.1.2 The Contractor must record, prepare, and provide the Meeting Minutes of each meeting IAW CDRL WTS-PM-006 at Appendix A2.8 to ANNEX A1 (pg. 123) and its associated DID WTS-PM-006 at Appendix A3.8 to ANNEX A1 (pg. 168).

3.6.6.2 No change in the interpretation of the SOW, Technical Requirements Specification, cost, and schedule, as defined in the Contract, may be authorized by the minutes of a meeting. Such changes will require formal contract amendment by the CA.

4.0 SYSTEMS ENGINEERING

4.1 Overview

4.1.1 The Contractor must define and implement Systems Engineering (SE) processes in conformance with IEEE 15288.1-2014, or equivalent standard, as further described within this document.

4.1.1.1 The Contractor must measure conformance via the outcomes and outputs specified by 15288.1-2014, or equivalent standard.

4.1.2 The Contractor must define and conduct technical reviews and audits in conformance with IEEE 15288.2-2014, or equivalent standard.

4.1.2.1 The Contractor must measure conformance via the outputs and criteria specified by 15288.2-2014, or equivalent standard.

4.1.3 The Contractor must use SE processes to define the requirements for the system, to transform the requirements into an effective product providing the required functionality, and to sustain the product functionality during the production/manufacturing phase.

4.1.4 The Contractor must implement a SE process that will transform all system requirements into a set of lower level performance requirements which define the system, including the following:

4.1.4.1 The SE process must plan, identify, and allocate functional requirements, provide inputs to documentation, and include requirement, design and implementation reviews.

4.1.4.2 The SE effort must integrate all elements of a multifunctional engineering effort to meet system requirements.

4.1.5 The Contractor must ensure the timely integration of engineering specialties such as reliability, maintainability, supportability, cybersecurity, logistics engineering, human factors engineering, safety, value engineering, standardization, and transportability into design and development.

4.1.6 The Contractor must perform engineering, design activities, and tasks as necessary to support production, installation, integration, test, and acceptance of all hardware components and software delivered.

4.2 Systems Engineering Management

4.2.1 The Contractor must designate a SE Manager with the responsibilities to coordinate, execute, and manage the Contractor's systems engineering activities for the Contract.

4.2.2 Systems Engineering Management Plan

4.2.2.1 The Contractor must submit a Systems Engineering Management Plan (SEMP) IAW CDRL WTS-SE-101 at Appendix A2.9 to ANNEX A1 (pg. 124) and its associated DID WTS-SE-101 at Appendix A3.9 to ANNEX A1 (pg. 169).

4.2.2.2 The Contractor must conduct its program of engineering activities, and ensure that all Subcontractor activities are IAW the approved SEMP.

4.2.3 Engineering Schedule

4.2.3.1 The Contractor must provide a time-based schedule of engineering activities as part of the CMS.

4.2.3.2 The Contractor must capture all technical milestones, including system reviews, and their key dependencies in the CMS.

4.2.4 Conduct of Mandated System Reviews

4.2.4.1 The Contractor must conduct all Mandated System Reviews (MSRs) and all Internal System Reviews IAW the approved SEMP.

4.2.4.2 The Contractor must conduct all MSRs at Contractor premises unless otherwise agreed by the TA and CA.

4.2.4.3 Unless otherwise agreed to between the parties, the Contractor must not commence a MSR until:

4.2.4.3.1 All data items required by the CDRL to be delivered before the review have been delivered, and the TA considers the data items to be suitable for the purposes of conducting the review;

4.2.4.3.2 All entry criteria defined in the governing plans for that review have been met;

4.2.4.3.3 All action items from any previous reviews affecting this review have been successfully addressed or action plans agreed with the TA; and

4.2.4.3.4 All pre-requisite activities defined in the contract have been successfully conducted.

4.2.4.4 Prior to each MSR, the Contractor must provide a MSR Package for that review IAW CDRL WTS-SE-102 at Appendix A2.10 to ANNEX A1 (pg. 125) and its associated DID WTS-SE-102 at Appendix A3.10 to ANNEX A1 (pg. 174).

4.2.4.5 Prior to each MSR, the Contractor must provide a Meeting Agenda for that review, and following each MSR, provide Meeting Minutes of that review.

4.2.4.5.1 Refer to Meeting Documentation requirements found at ANNEX A1 para. 3.6.6.

4.2.4.6 The Contractor must ensure that Contractor representatives and Subcontractors' representatives participate in each MSR to the subject and objectives of that System Review.

4.2.4.7 The Contractor and the TA must co-chair each MSR.

4.2.4.8 The TA will classify each action item raised during MSRs as either a major or minor action item, considering their impact on the objectives of the MSR.

4.2.4.9 Unless otherwise agreed between the parties, the Contractor must not exit a MSR until:

4.2.4.9.1 All exit criteria, as defined in the governing plans for that review, have been met;

4.2.4.9.2 All contract plans, schedules, and activities for future phases have been reviewed and confirmed as appropriate, realistic and achievable with acceptable risk;

4.2.4.9.3 All major action items have been closed;

4.2.4.9.4 All minor action items have been documented and assigned with agreed closure dates; and

4.2.4.9.5 The MSR has achieved its objectives, as defined in the SOW and the governing plans relating to that review.

4.2.4.10 The Contractor must not claim completion for a MSR until both the TA and the Contractor are satisfied that all the exit criteria have been met.

4.2.5 Requirements Traceability Verification Matrix (RTVM)

4.2.5.1 The Contractor must provide an RTVM IAW CDRL WTS-SE-103 at Appendix A2.11 to ANNEX A1 (pg. 126) and its associated DID WTS-SE-103 at Appendix A3.11 to ANNEX A1 (pg. 175).

4.2.5.2 The Contractor must utilize the Technical Specification at Appendix A1.0 to ANNEX A1, to develop the RTVM and demonstrate compliance to the Technical Specification.

4.2.5.3 The Contractor must trace each specification requirement and verification requirement to one or more requirements in the next lower level in the specification hierarchy (downward traceability).

4.2.5.4 The Contractor must trace each specification requirement and verification requirement to one or more requirements in the next higher level in the specification hierarchy (upward traceability).

4.3 System Design

4.3.1 Preliminary Design Review (PDR)

4.3.1.1 The Contractor must conduct a MSR, a PDR, at the completion of the preliminary design phase, IAW the approved SEMP.

4.3.1.1.1 The purpose of the PDR is for the Government to formally review the activities and work products generated by the Contractor during the performance of the preliminary design stage in order to develop the allocated baseline, and to verify that the approach for the system design is ready to proceed into the detailed design phase.

4.3.1.1.2 The Contractor must present and describe the system design and program status.

4.3.1.1.3 The Contractor must include the following topics for discussion and presentation at the PDR:

4.3.1.1.3.1 Assess the proposed packaging of the WTU, MEU and WSU within the standard QUADCONs and ASU within a standard BICON. The integration design of a whole WTS as a system: (2 QUADCONs mounted on a trailer; mounted and dismounted operation scenarios).

4.3.1.1.3.2 Determine if the design of the proposed Water Filtration and Treatment System is mature enough for the Contractor's detailed design of the WTS.

4.3.1.1.3.3 Logistics design aspects and concerns

4.3.1.1.3.4 Test and evaluation;

4.3.1.1.3.5 Program problem and risk areas, recommended solutions, and evaluation of alternatives; and

4.3.1.1.3.6 Updated RTVM.

4.3.1.2 PDR Entry Criteria

4.3.1.2.1 The Contractor must meet the following entry criteria for the PDR to take place:

4.3.1.2.1.1 Updated RTVM showing traceability of requirements is available;

4.3.1.2.1.2 Allocated Baseline has been developed;

4.3.1.2.1.3 Risk assessments and risk mitigation plans have been developed;

4.3.1.2.1.4 Reliability and Maintainability (R&M) requirements have been allocated to the design;

4.3.1.2.1.5 CMS shows critical path through CDR;

4.3.1.2.1.6 Program technical risk is medium or lower;

4.3.1.2.1.7 Program execution risk is medium or lower;

4.3.1.3 PDR Exit Criteria

4.3.1.3.1 The Contractor must meet the following exit criteria for the PDR to complete:

4.3.1.3.1.1 CDRL items that were part of the PDR entry criteria have been discussed;

4.3.1.3.1.2 Updated RTVM demonstrates forward and backward traceability;

4.3.1.3.1.3 Risk assessments and risk mitigation plans have been discussed. Risks and their respective mitigation plans are in place and manageable for implementation of the functional requirements into a preliminary design;

4.3.1.3.1.4 Program schedule is executable within the anticipated cost and technical risks;

4.3.1.3.1.5 Program is properly staffed;

4.3.1.3.1.6 PDR presentation materials are available;

4.3.1.3.1.7 Per the CMS, an executable schedule has been presented;

4.3.1.3.1.8 Allocated Baseline has been established;

4.3.2 Critical Design Review (CDR)

4.3.2.1 The Contractor must conduct a MSR, a CDR, at the completion of the detailed design phase, IAW the approved SEMP.

4.3.2.1.1 The purpose of the CDR is for the Government to formally review the activities and work products generated by the Contractor during the performance of the detail design stage in order to develop the product baseline, and to verify that the building blocks are either ready for further development, adequately defined for procurement, or adequately defined for fabrication.

4.3.2.1.2 The Contractor must present and describe the finalized system design and program status, and address the design changes made since the PDR.

4.3.2.1.3 The Contractor must include the following topics for discussion and presentation at the CDR:

4.3.2.1.3.1 Ensure that the detailed design of the WTS addresses the performance requirements within the Technical Specification;

4.3.2.1.3.2 Ensure that the detailed design of the WTS is adequate to proceed into fabrication, system integration and testing;

4.3.2.1.3.3 Electromagnetic Environmental Effects impacts;

4.3.2.1.3.4 R&M and system safety programs progress, including updated R&M predictions and hazards analysis results;

4.3.2.1.3.5 Logistics design aspects and concerns;

4.3.2.1.3.6 Test and evaluation;

4.3.2.1.3.7 Program problem and risk areas, recommended solutions, and evaluation of alternatives; and

4.3.2.1.3.8 Updated RTVM.

4.3.2.2 CDR Entry Criteria

4.3.2.2.1 The Contractor must meet the following entry criteria for the CDR to take place:

4.3.2.2.1.1 Updated RTVM showing requirements traceability is available;

4.3.2.2.1.2 RESERVED

4.3.2.2.1.3 Updated risk assessment and risk mitigation plans are available;

4.3.2.2.1.4 Risks and their respective mitigation plans are in place and manageable for implementation of the functional requirements into a final design;

4.3.2.2.1.5 R&M requirements have been addressed in the design;

4.3.2.2.1.6 Trade-off analyses have been completed;

4.3.2.2.1.7 Logistics analysis has been completed and plans have been established; and

4.3.2.2.1.8 CMS shows critical path through testing.

4.3.2.3 CDR Exit Criteria

4.3.2.3.1 The Contractor must meet the following exit criteria for the CDR to complete:

4.3.2.3.1.1 CDRL items that were part of the CDR entry criteria have been satisfactorily discussed;

4.3.2.3.1.2 Updated RTVM demonstrates forward and backward traceability;

4.3.2.3.1.3 Updated risk assessments and risk mitigation plans have been satisfactorily discussed. Risks and their respective mitigation plans are in place and manageable for implementation of the functional requirements into a final design;

4.3.2.3.1.4 Program schedule is executable within the anticipated cost and technical risks;

4.3.2.3.1.5 Program is properly staffed;

4.3.2.3.1.6 CDR presentation materials are available;

4.3.2.3.1.7 Per the CMS, an executable schedule has been presented; and

4.3.2.3.1.8 Initial Product Baseline has been developed.

4.3.3 Engineering Drawings and Associated Lists

4.3.3.1 The Contractor must provide a complete set of **LEVEL 2** Commercial Engineering Drawings and Associated Lists IAW CDRL WTS-SE-104 at Appendix A2.12 to ANNEX A1 (pg. 127) and its associated DID WTS-SE-104 at Appendix A3.12 to ANNEX A1 (pg. 177) and Appendix A4.0 APPENDIX: COMMERCIAL (OEM) ENGINEERING DRAWINGS AND ASSOCIATED LISTS

4.4 Specialty Engineering

4.4.1 Growth, Evolution and Obsolescence Program

4.4.1.1 The Contractor must provide a growth, evolution and obsolescence program that meets the following objectives:

4.4.1.1.1 Technology evolution and Obsolescence issues are appropriately considered in the design of the WTS;

4.4.1.1.2 The Contractor's design, development and production programs will not deliver equipment that has obsolescence problems at the time of delivery; and

4.4.1.1.3 Solutions for the WTS minimize Life Cycle Cost when technology evolution and obsolescence issues are taken into consideration.

4.4.1.2 The Contractor must address the planning for, and the management of, the growth, evolution and obsolescence program in the SEMP.

4.4.1.3 The Contractor must conduct the growth, evolution and Obsolescence program IAW the approved SEMP.

4.4.2 Human Engineering

4.4.2.1 The Contractor must provide a Human Engineering program that meets the following objectives:

4.4.2.1.1 Develop or improve human interfaces of the WTS;

4.4.2.1.2 Achieve required effectiveness of human performance during WTS operation, maintenance, support, control, and transportation; and

4.4.2.2 The Contractor must address planning for, and management of, the Human Engineering program in the SEMP.

4.4.2.3 The Contractor must conduct the Human Engineering program IAW the approved SEMP.

5.0 CONFIGURATION MANAGEMENT

5.1 Overview

5.1.1 The Contractor must conduct configuration management activities IAW IEEE 15288.1-2014 and ANSI/EIA-649-C, or equivalent standards, to ensure effective configuration identification, configuration control, change control, and configuration audits for the Work, as well as effective management and implementation of engineering changes.

5.2 Configuration Management Planning

5.2.1 The Contractor must address planning for, and management of, the Configuration Management (CM) program in the SEMP.

5.2.2 The Contractor must manage, conduct and coordinate all Contractor and Subcontractor CM activities IAW the approved SEMP.

5.2.3 The Contractor must ensure that all Subcontractors comply with the requirements of the SEMP and are integrated into the Contractor's CM activities

5.3 Configuration Baselines

5.3.1 The Contractor must develop and maintain each of the following Configuration Baselines for the WTS during the contract:

5.3.1.1 Functional Baseline (FBL);

5.3.1.2 Allocated Baseline (ABL); and

5.3.1.3 Product Baseline (PBL).

5.4 Configuration Control

5.4.1 The Contractor must manage configuration changes and Deviations (see para. 7.2.1), including their:

5.4.1.1 Identification;

5.4.1.2 Request and documentation;

5.4.1.3 For configuration changes only, classification as Class I (major change) or Class II (minor change);

5.4.1.4 Evaluation and coordination; and

5.4.1.5 Implementation and verification of the changes.

5.4.2 The Contractor must provide Engineering Change Proposals (ECPs) IAW CDRL WTS-SE-105 at Appendix A2.13 to ANNEX A1 (pg. 128) and its associated DID WTS-SE-105 at Appendix A3.13 to ANNEX A1 (pg. 178), to implement changes to the approved FBL and PBL.

5.4.2.1 The Contractor must document all necessary changes to specifications, drawings and other documentation requiring revision should the ECP be approved, in place of the reference to Specification Change Notices.

5.4.2.2 Copies of these revisions must be provided for CDRLs already provided to DND, following the original CDRL timelines for review.

5.4.3 As per ACMP-2009, the Contractor must classify an ECP as Class I if:

5.4.3.1 The FBL, once established, is affected to the extent that any of the requirements are not within specified limits or specified tolerances;

5.4.3.2 The PBL, once established, is affected or the change impacts one or more of the following:

5.4.3.2.1 Government Furnished Equipment (GFE);

5.4.3.2.2 Safety (to include safety critical software);

5.4.3.2.3 Security;

5.4.3.2.4 Deliverable computer software;

5.4.3.2.5 Compatibility or interoperability with interfacing items;

5.4.3.2.6 Delivered operational and maintenance manuals;

5.4.3.2.7 Interchangeability or replaceability; or

5.4.3.2.8 Skills, manning, training, biomedical factors or human engineering design;

5.4.3.3 Any of the contractual factors are affected, such as costs, guarantees, warranties, deliveries or scheduled contractual milestones.

5.4.4 The Contractor must classify an ECP as Class II for all changes not classified as Class I, and the Contractor will require that the TA reviews Class II changes for concurrence in the classification only.

5.4.4.1 At the request of the TA, the Contractor must resubmit a proposed Class II change to a PBL as a proposed Class I change to that PBL.

5.4.5 The Contractor must, for any proposed change to a Configuration Baseline, ensure that all Configuration Baselines will be mutually consistent and compatible.

5.5 Configuration Status Accounting

5.5.1 The Contractor must establish and maintain, IAW the approved SEMP, a Configuration Status Accounting (CSA) system that correlates, stores, maintains and provides readily available views of all configuration information relating to those items identified as Configuration Items.

5.5.2 The Contractor must provide CSA Reports, from the Contractor's CSA system, IAW CDRL WTS-SE-106 at Appendix A2.14 to ANNEX A1 (pg. 129) and its associated DID WTS-SE-106 at Appendix A3.14 to ANNEX A1 (pg. 185), capturing all current change status and change history and the as-designed, as-built, as-delivered and as-modified configuration

of all Configuration Items and International Container Bureau (BIC) consisting of the DND Owner Code (CFCU) tracked components of the WTS.

5.5.2.1 For Computer Software Configuration Items and Computer Software Components, the CSA must include the as-delivered, as-modified and as-tested configuration as of a particular date.

5.6 Configuration Audits

5.6.1 The Contractor must invite the TA, or representatives appointed by the TA, to witness all Configuration Audits.

5.6.2 Unless the Contractor is otherwise notified by the TA, the TA or appointed representative(s) must witness all Configuration Audits that are conducted for the purpose of acceptance.

5.6.3 Unless the TA has notified that it will not witness a Configuration Audit IAW para 5.6.2, the Contractor must not conduct that Configuration Audit in the absence of the TA or the appointed representative(s).

5.6.4 Physical Configuration Audit (PCA)

5.6.4.1 The Contractor must conduct a MSR, the PCA, on each WTS Configuration Item, prior to delivery, IAW the approved SEMP.

5.6.4.1.1 The objective of the PCA for an item are to:

5.6.4.1.1.1 Confirm that the 'as-built' or 'as-coded' configuration is consistent with the configuration documentation;

5.6.4.1.1.2 Confirm that the configuration documentation is complete and accurate; and

5.6.4.1.1.3 Establish or verify the PBL for the item.

5.6.4.1.2 The Contractor must perform a detailed audit of engineering drawings, specifications, Technical Data and tests utilized in production of the Configuration Item, including the design documentation, listings, and manuals for software Configuration Items. The review includes an audit of the released engineering documentation and quality control records to make sure the as-built or as-coded configuration is reflected by this documentation.

5.6.4.1.3 The Contractor must conduct a PCA on the first production article of a Configuration Item and those that are a re-procurement of a Configuration Item already in the inventory.

5.6.4.1.4 Satisfactory completion of a PCA for a Configuration Item results in the establishment of the Product Baseline for that Configuration Item.

5.6.4.2 PCA Entry Criteria

5.6.4.2.1 The Contractor must meet the following entry criteria for the PCA to take place:

5.6.4.2.1.1 The Contractor has submitted the final draft of the product specification for the Configuration Item to be audited to the TA for review prior to PCA;

5.6.4.2.1.2 The Contractor has provided the TA with a current listing of all deviations and waivers against the item, either requested of, or approved by DND;

5.6.4.2.1.3 The Contractor has provided the TA with identification of the Configuration Item to be audited in terms of nomenclature, specification identification number and Configuration Item number; and

5.6.4.2.1.4 The Contractor has provided the TA with drawings, part numbers and build status of the Configuration Item subject to audit, including serial numbers and software identification.

5.6.4.3 PCA Exit Criteria

5.6.4.3.1 The Contractor must meet the following exit criteria for the PCA to complete:

5.6.4.3.1.1 CDRL items that were part of the PCA entry criteria have been satisfactorily discussed;

5.6.4.3.1.2 All risks identified during the course of PCA have been documented and analyzed, and the risks with proceeding to the next phase are acceptable to the TA;

5.6.4.3.1.3 Configuration differences between the Configuration Item qualified and the Configuration Item being audited have been made a matter of record in the PCA minutes; and

5.6.4.3.1.4 All build records for the Configuration Item confirm that the Configuration Item has been built IAW the drawings and specifications.

6.0 VERIFICATION

6.1 Verification Management

6.1.1 Verification Planning

6.1.1.1 The Contractor must address planning for, and management of, the Verification program in the SEMP.

6.1.1.2 The Contractor must conduct all Verification activities for the contract IAW the approved SEMP and approved Acceptance Test Plan and Procedures (ATP&Ps) CDRL WTS-SE-107 at Appendix A2.15 to ANNEX A1 (pg 130) and its associated DID WTS-SE-107 at Appendix A3.15 ANNEX A1 (pg. 187), which are necessary for each Verification phase.

6.1.2 DND Involvement in Acceptance Verification (AV)

6.1.2.1 The Contractor must invite the TA, or representatives appointed by the TA, to witness, and participate in when applicable, all AV activities.

6.1.2.2 Unless otherwise notified by the TA, the TA or appointed representative(s) must witness and participate in AV activities.

6.1.2.3 Unless the TA has notified that they will not witness an AV activity IAW para 6.1.2.2, the Contractor must not conduct that AV activity in the absence of TA or appointed representative(s).

6.1.2.4 Unless otherwise agreed in writing by the TA, the Contractor must provide the TA, or representatives appointed by the TA, with at least 42 Calendar Days advance notice of the start date and time of all AV activities for the WTS.

6.1.3 Test Readiness Reviews (TRRs)

6.1.3.1 Prior to the commencement of each AV phase, the Contractor must hold a MSR, a TRR, IAW the approved SEMP, which:

6.1.3.1.1 Confirms the accuracy and completeness of the ATP&Ps for the verification phase;

6.1.3.1.2 Confirms the status of the applicable Configuration Baseline and of the system, item, or process under test;

6.1.3.1.3 Reviews results from preceding test activities, where applicable to the Acceptance Verification activity;

6.1.3.1.4 Assures that the relevant Item Under Test (IUT) is ready for testing. The IUT may be a CI, group of CIs, subsystem, component or system;

6.1.3.1.5 Assures that any DND resources required are available and prepared for formal testing; and

6.1.3.1.6 Assures that the Contractor is prepared for formal testing.

6.1.3.2 The TRR must be held after the test procedures for formal testing have been dry run against the same configuration of the IUT as that which will be presented for

formal testing. A technical understanding of the informal test results arising from the dry run must be established.

6.1.3.3 TRR Entry Criteria

6.1.3.3.1 The Contractor must meet the following entry criteria for the TRR to take place:

6.1.3.3.1.1 The status of all design and test documentation for the IUT has been established and declared to the TA;

6.1.3.3.1.2 The updated RTVM showing traceability from IUT requirements to the test procedures and contract test requirements has been established and declared to the TA; and

6.1.3.3.1.3 Action items from any previous reviews affecting TRR have been successfully addressed or action plans agreed with the TA.

6.1.3.4 TRR Exit Criteria

6.1.3.4.1 The Contractor must meet the following exit criteria for the TRR to complete:

6.1.3.4.1.1 All required resources including personnel, equipment and facilities are available for formal testing;

6.1.3.4.1.2 The IUT and test procedures are deemed to be satisfactory by both the Contractor and the TA to support formal testing;

6.1.3.4.1.3 Plans for the measurement and analysis program for the next AV phase have been agreed by the TA, including the measures to be collected, associated collection methods, and analysis techniques; and

6.1.3.4.1.4 All risks identified during the course of TRR have been documented and analyzed, and the risks with proceeding to the next phase are acceptable to the TA.

6.1.4 Failure Reporting and Analysis

6.1.4.1 During AV of the WTS elements, the Contractor must establish, maintain and update a Problem Resolution System that:

6.1.4.1.1 collects Failure data (including applicable CI identification and configuration data);

6.1.4.1.2 classifies the Failure Severity IAW the following table:

Failure Severity	Applies if a problem could:
1	a. prevent the accomplishment of an operational or mission essential capability b. jeopardize safety, security, or other requirement designated « critical »

Failure Severity	Applies if a problem could:
2	a. adversely affect the accomplishment of an operational or mission essential capability and no work-around solution is known b. adversely affect technical, cost, or schedule risks to the Contract or to life-cycle support of the system, and no work-around solution is known
3	a. adversely affect the accomplishment of an operational or mission essential capability but a work-around solution is known b. adversely affect technical, cost, or schedule risks to the Contract or to life-cycle support of the system, but a work-around solution is known
4	a. result in user/operator inconvenience or annoyance but does not affect a required operational or mission essential capability b. result in inconvenience or annoyance for development or support personnel, but does not prevent the accomplishment of those responsibilities
5	any other effect

6.1.4.1.3 Documents the failures and associated failure modes;

6.1.4.1.4 Defines corrective actions;

6.1.4.1.5 Identifies the scope of additional verification activities required to confirm that the failure has been remedied; and

6.1.4.1.6 Maintains a history of all transactions.

6.1.4.2 The Contractor must provide all facilities and assistance reasonably required by the DND in order for the DND to access the Problem Resolution System for the duration of the contract.

6.1.4.3 The Contractor must submit for TA approval all corrective actions to address safety-related failures that occur during AV that are assigned a Failure Severity classification of either 1 or 2.

6.1.4.4 The Contractor must invite the TA, or representatives appointed by the TA, to witness corrective actions and the closure of failures during AV that are assigned a Failure Severity classification of either 1 or 2.

6.1.4.5 The Contractor must incorporate all updates to failures and associated reports into the Problem Resolution System.

6.1.5 Regression Testing

6.1.5.1 Subject to para. 6.1.5.2, the Contractor must repeat an AV activity (i.e. conduct regression testing) if:

6.1.5.1.1 Changes are made to the configuration of a WTS component after starting an AV activity;

6.1.5.1.2 The analysis of test data and the assessment of test results against pass/fail criteria indicate that the item under test has failed to meet its applicable requirements;

6.1.5.1.3 The analysis of test data and the assessment of test results against pass/fail criteria are inconclusive; or

6.1.5.1.4 The Contractor deviates from the ATP&Ps without prior approval by the TA.

6.1.5.2 If the Contractor can demonstrate to the satisfaction of the TA, by regression analysis or any other such means that changes to the configuration do not impact on an AV activity, then subject to the TA's approval of the regression analysis, or any other such means, the Contractor will not be required to repeat that AV activity.

6.2 Acceptance Verification

6.2.1 General

6.2.1.1 The Contractor must conduct AV on equipment that is of the same hardware, software, firmware and data configuration (as applicable) as that which will be offered for acceptance, unless otherwise agreed by the TA.

6.2.1.2 The Contractor must confirm that the test environment, all test equipment and software test tools, if applicable, used for the AV of the WTS are IAW the approved ATP&P.

6.2.1.3 The Contractor must maintain a log during all AV activities to record applicable information including test details, the configuration of the items under test, the ATP&Ps used and any deviations from them, the test results, and any configuration changes and maintenance actions.

6.2.1.4 The Contractor must provide Acceptance Test Reports (ATRs) IAW CDRL WTS-SE-108 at Appendix A2.16 to ANNEX A1 (pg. 131) and its associated DID WTS-SE-108 at Appendix A3.16 to ANNEX A1 (pg. 190), which are necessary for the evaluation of AV results, consistent with the approved ATP&Ps.

6.2.2 First Production Article Verification (FPAV)

6.2.2.1 The FPAV is conducted to ensure that the delivered WTS complies with RTVM, Para. 4.2.5, IAW CDRL WTS-SE-103 at Appendix A2.11 to ANNEX A1 (pg. 126) and its associated DID WTS-SE-103 at Appendix A3.11 to ANNEX A1 (pg. 175).

6.2.2.2 The Contractor must provide a current draft of the WTS Operator Manual IAW CDRL WTS-ILS-201 at Appendix A2.18 to this ANNEX A1 (pg. 133) and its associated DID WTS-ILS-201 at Appendix A3.18 to this ANNEX A1 (pg.192)

(Para 8.3.1.1.1) upon the start of every WTS FPAV in order to allow the ILSM to conduct *in situ* validation during the FPAV.

6.2.2.2.1 Every new draft of the WTS Operator Manual submitted at FPAV(s) will be considered a First Draft by Canada for the purposes of CDRL timeline.

6.2.2.3 Water Quality Testing

6.2.2.3.1 The Contractor must ensure that the WTS passes the Water Quality Testing.

6.2.2.3.2 The testing will comprise of 4 different source waters defined in Appendix A5.0 to ANNEX A1.

6.2.2.4 Static Rollover Threshold (SRT)

6.2.2.4.1 The Contractor must ensure that the WTS in its primary mode of operation of WTU and MEU on the Trailer, without the prime mover, achieves a Static Rollover Threshold (SRT) of no less than 29° in either direction (roadside and curb).

6.2.2.4.2 The SRT will be measured using the procedures outlined in SAE J2180, May 2011, Tilt Table Procedure for Measuring the Static Rollover Threshold for Heavy Trucks and ATP&Ps;

6.2.2.5 Noise limit test

6.2.2.5.1 The Contractor must ensure that the WTU and components, necessary for the production of water, passes the audible noise limit test for an eight hour exposure IAW ATP&Ps;

6.2.2.5.2 The test must be conducted using a calibrated sound meter.

6.2.2.5.3 The test will be considered successful if the audible noise level generated does not exceed 87 dB (A) at 1m away from the center of the noise source and does not exceed 70 dB (A) at 7m away from the center of the noise source.

6.2.2.6 Road and Cross Country Test

6.2.2.6.1 The Contractor must ensure that the WTS in its primary mode of operation of WTU and MEU on the Trailer passes a Road and Cross Country Test.

6.2.2.6.2 The WTS road test will be conducted at CAF base of Gagetown, New-Brunswick, training area and surroundings roads. The Gagetown training area and surroundings roads are the utmost suitable location to represent the environment of which this equipment would be exposed through is service life. The WTS as configured in 6.2.2.6.1, must undergo five (5) times the equivalent of one (1) mission profile.

6.2.2.6.3 Testing will consist of towing the WTS, in its primary mode of operation configuration. The towing of the system will be over a total distance of 1000 km, on suitable roads, Trails, and Cross-Country routes. Routes will be mutually agreed upon by Canada and the manufacturer. Roads are defined as follow:

6.2.2.6.3.1 Primary Roads: 20% of the mission profile will be taking place on paved road. Paved road nominal speed will be 100 km/h. Paved road is defined as: all weather, maintained, hard surface (paved) roads with good driving visibility used for heavy and high density traffic. These roads have lanes with a minimum width of 2.7 m (9 ft.), and the legal maximum gross vehicle weight/gross combination weight (GVW/GCW) for the country or province is assured for all bridges. These roads are surfaces having an RMS roughness value of less than 0.5 cm.

6.2.2.6.3.2 Secondary (Gravel) Roads: 50% of the mission profile will be taking place on CAF Base training area, Main Surface Road (MSR). Secondary road nominal speed will be 60 km/h. The gravel road is described as: all weather, occasionally maintained, hard or loose surface (e.g., large rock, paved crushed rock, gravel) intended for medium-weight, low-density traffic. These roads have two lanes with a minimum width of 2.4 m (8 ft.) per lane. These roads are surfaces typically having an RMS roughness value varying between 0.3 and 1.8 cm.

6.2.2.6.3.3 Trails: 25% of the mission profile will be taking place on CAF Base training area trails. Trails nominal speed will be 20 km/h. Trails are defined as: one lane, unimproved, seldom maintained loose surface roads, intended for low density traffic with an expectation that characteristics will change as the weather changes from dry to wet. Trails have a minimum width of 2.4 m (8 ft.), no large obstacles (boulders, logs, stumps) and no bridging. These are surfaces typically having an RMS roughness value varying between 1.0 and 3.8 cm.

6.2.2.6.3.4 Cross-Country: 5% of the mission profile will be taking place in CAF Base training area. Cross-Country nominal speed will be the best possible Speed. Cross-Country is defined as: vehicle operations over terrain not subject to repeated traffic and where no roads, routes, well-worn trails or man-made improvements exist. These are surfaces typically having an RMS roughness value from than 2.0 cm to 12.7 cm.

6.2.2.6.3.5 Fording: One (1) fording mission of 21m in total length will be taking place on CAF driving course area. Mission will be taking place, in a concrete basin (shallow pond obstacle), in a still water, at a speed of 3-5 km/h, with a controlled depth of 750 mm. Ramp at both ends will permit gradual immersion and emersion of the WTS trailers;

6.2.2.6.3.6 Side slope: One (1) 25% side slope mission of 60 m total length will be taking place on CAF base driving course area. This side slope test is to confirm the stability and controllability of the WTS during the off road missions. One side slope mission consist of two (2) side passes per mission, at a speed of 3-5 km/h. Driver will be crossing the obstacle in both directions;

Table 1. One (1) WTS Mission profile

Mission	Description	Quantity or % of total distance	Nominal Speed or time	Nominal Roughness Range (Centimeter-RMS)
Total distance	**Mission profile**	**200 km**	**KM/H**	
Paved road	Continuous asphalt or concrete	20%	100 km/h	< 0.5
Gravel road	Compacted gravel and dirt maintained by grading	50%	60 km/h	0.3 to 1.8
Trail	Loose surface, unmaintained	25%	20 km/h	1.0 to 3.8
Cross Country	Rocky surfaces, through mud and sand	5%	Best Possible Speed	2.0 to 12.7
Maximum Speed	Pass or downhill dash	1	110 km/h	
Fording	Water obstacle must be a minimal depth of 750 mm	1	3-5 km/h	
Hard Braking	Complete Deceleration per Mission	10	50 to 0 km/h	Any
Traverse Slope	25% side slope. Surface is hard and free of loose material. Intermediate stop approximately half way through the side slope. Once with driver facing up and once with driver facing down the slope	2	3-5 km/h	

6.2.2.7 Functionality test #1

6.2.2.7.1 Following the 50% completion of the road and cross country test, (2.5 X mission profile), the Contractor must complete the following:

6.2.2.7.1.1 Keeping system in its primary mode of operation, the contractor must conduct a detailed analysis of the WTS and trailer to validate that all components, systems and subsystems remain functional and operate within designed tolerances IAW ATP&Ps;

6.2.2.7.1.2 DND may conduct their own detailed analysis of the WTS after 50% of the road and cross country test completion;

6.2.2.7.1.3 The contractor will conduct a WTS reliability water production test as follow:

6.2.2.7.1.3.1 Location: New Brunswick, Base of Gagetown; training area, Swan lake;

6.2.2.7.1.3.2 Water production time: 1 hours

6.2.2.7.1.3.3 Water production rate for one hour: 1250L

6.2.2.7.1.3.4 Maintenance: Operator maintenance only, IAW with the Maintenance Concept (see 8.1) and the draft Operator Manual provided at the onset of FPAV (see 6.2.2.2).

6.2.2.7.1.3.5 Set up and tear down time: IAW ATP&P;

6.2.2.7.1.3.6 Test samples: A water sample will be taken at the end of the hour for a total of two (2) samples. The sampling test will consist of taking two samples, one (1) prior to the exit of the WTS and one (1) from the storage tank, for a total of two (2) samples.

6.2.2.7.1.3.6.1 Test sample will be taken and sent to an accredited lab in New Brunswick.

6.2.2.8 Functionality test #2

6.2.2.8.1 Following the 100% completion of the Road and Cross Country Test, (5 X mission profile), the Contractor must complete the following:

6.2.2.8.1.1 With the system in its secondary mode of operation (dismounted), the Contractor must conduct a detailed analysis of the WTS and trailer to validate that all components, systems and subsystems remain functional and operate within designed tolerances IAW ATP&Ps~~:~~

6.2.2.8.1.2 DND may conduct their own detailed analysis of the WTS after 100% of the road and cross country test completion;

6.2.2.8.1.3 The contractor will conduct a WTS reliability water production test as follow:

6.2.2.8.1.3.1 Location: New Brunswick, Base of Gagetown; training area, Swan lake;

6.2.2.8.1.3.2 Test duration: 72 hrs;

6.2.2.8.1.3.3 Water production time: 60 hrs;

6.2.2.8.1.3.4 Hours of daily operation: 24 hrs;

6.2.2.8.1.3.5 Water production daily: 20 hrs;

6.2.2.8.1.3.6 Water production per hour: 1250L; and

6.2.2.8.1.3.7 Water production per day: 25 000L;

6.2.2.8.1.3.8 Maintenance: Operator maintenance only, IAW with the Maintenance Concept (see 8.1) and the draft Operator Manual provided at the onset of FPAV (see 6.2.2.2).

6.2.2.8.1.3.9 Set up and tear down time: IAW ATP&P;

6.2.2.8.1.3.10 Test samples: Will be taking place at the end of each day for a total of three (3) sample test. Each sample test will consist of taking two (2) samples, one (1) before exiting the WTU and one (1) from the storage tank for a total of 6 sample bottles.

6.2.2.8.1.3.10.1 Test sample will be taken and sent to an accredited lab in New Brunswick.

6.2.2.9 Test Failure

6.2.2.9.1 WTS test failure will consist of any damage surpassing Operator fault-finding and maintenance, IAW with the Maintenance Concept (see 8.1) and the draft Operator Manual provided at the onset of FPAV (see 6.2.2.2). Any damages, which will constitutes a test failure, when surpassing Operator fault-finding and maintenance are those that:

6.2.2.9.1.1.1 Prevent operation or towing,

6.2.2.9.1.1.2 Cause further operation to be unsafe, or

6.2.2.9.1.1.3 Further operation might result in extensive damage to the equipment;

6.2.2.10 Container inspection

6.2.2.10.1 ISO Container must have an inspection performed post road and cross country road test to ensure all system components remain free of damage and remains functional with no performance degradation IAW para 6.2.2.9.1 Any damage found to the containers components or observation of the containers degradation will constitute a test failure and the agreed upon process within the First Article Acceptance Plan will dictate the process to follow.

6.2.2.10.2 DND will conduct a visual inspection of the WTU and MEU and may conduct a more thorough inspection of the containers IAW C-90-242-000/NJ-001 which is MIL-STD-3037 section 5 detailed requirements of the visual exam;

6.2.2.10.2.1 DND's container inspection will be conducted by a certified container inspector: and

6.2.2.10.2.2 The inspection and measurement of the ISO container must be carried out at the same place, before and after the on-road and off-road test.

6.2.2.11 Trailer inspection;

6.2.2.11.1 The trailer must have an inspection performed pre and post road and cross country test to ensure all system components remain free of damage and the trailer remains functional with no performance degradation IAW para 6.2.2.9.1. Any damage found to the trailer components or observation of the trailer degradation will constitute a test failure and the agreed upon process within the First Article Acceptance Plan ATP&P will dictate the process to follow.

6.3 Design Acceptance

6.3.1 The acceptance and approval of all ATRs from the FPAV by the DND TA constitutes **Design Acceptance** and is the final criterion to be met to allow the Contractor to proceed with series production of the WTS.

6.3.2 **Additional Work Requests (AWR)**

6.3.2.1 During the performance of the contract, Canada may request that the contractor complete AWRs on an “as and when requested” basis. These AWRs will be limited to supplementary tasks related to work already described in the SOW and may include Field Services Representatives (FSR) support, Technical Investigation and Engineering Services (TIES) and minor Repair and Overhaul tasks;

6.3.2.2 The AWRs are not intended to increase the capabilities of the equipment, rather to address unforeseen work to ensure that the equipment is safe to operate, and that it functions as intended within the original scope.

7.0 QUALITY ASSURANCE

7.1 Contractor Quality Responsibilities

7.1.1 The Contractor must have a Quality Management System (QMS) compliant to ISO 9001:2015 'Quality Management Systems – Requirements', or other internationally accepted equivalent standard as agreed by DND Directorate of Quality Assurance (DQA), at Contract Award..

7.1.2 The Contractor must maintain and apply the QMS in para 7.1.1 to all phases of the contract and must notify the TA of any changes to the Certification status of the Contractor.

7.1.3 During progress of work under the contract, the DQA Quality Assurance Representative (QAR) may perform audit and surveillance activities in relation to the work performed, including any of the following:

7.1.3.1 System Audit;

7.1.3.2 Process Audit; or

7.1.3.3 Product Audit.

7.1.4 The Contractor must provide all facilities and assistance reasonably required by the QAR in order for the QAR to perform audit and surveillance activities as described in para 7.1.3.

7.1.5 The Contractor must ensure that all Subcontractors have quality management systems that are appropriate to the work required under the Subcontract.

7.1.6 The Contractor must ensure that all work performed under a Subcontract meets the requirements of the QMS to be applied by the Contractor under para. 7.1.1.

7.2 Non-Conforming Deliveries

7.2.1 If the Contractor seeks to use non-conforming materials or work in the deliveries, the Contractor must follow D-02-006-008/SG-001 the Design Change, Deviation and Waiver Procedure and provide the related and completed form, which will be provided to the Contractor by the QAR when necessary. The following is a summary of the related form:

7.2.1.1 FORM DND 675 – Request for Waiver or Deviation – is used to request and obtain waivers to permit the acceptance of items, which through error during manufacture, do not conform to the technical data requirements of the contract **OR** is used to request and obtain authorization for a temporary departure from the technical data requirements of the contract to be incorporated in any number of items being manufactured to the contract.

7.2.1.1.1 Waiver – The written authorization granted after manufacture to permit the acceptance of items which during production **or** after having been submitted for inspection, are found to depart from the technical data requirements of the contract, but are considered suitable for use "as is" or after approved repair.

7.2.1.1.2 Deviation – Written authorization for a temporary departure, granted prior to the manufacture of an item, to depart from a particular performance or design requirement of a contract, specification, or referenced document, for a specific number of items, a specified service, or a specific period of

time. This departure is NOT recorded in the technical data for future manufacture.

7.2.2 The DND may approve or not approve the application for a Waiver or Deviation in its sole and absolute discretion and may provide approval subject to any amendments to, or conditions on, the approval of the application for a Waiver or Deviation which are deemed necessary by DND.

7.2.3 Any approval of an application for a Waiver or Deviation will not release the Contractor from due performance of its obligations under the contract, except to the extent specifically set out in the approved application for a Waiver or Deviation.

7.2.4 If an application for a Waiver or Deviation is approved, the Contractor must undertake all actions to rectify the non-conformance IAW the timeframes and any other requirements for such rectification, or to meet any conditions specified in the approved application for a Waiver or Deviation.

7.2.5 When the Contractor has rectified the non-conformance(s) in an approved application for a Waiver or Deviation, it must notify the QAR and seek closure of the application for a Waiver or Deviation by submitting, with the notice, evidence to demonstrate that the applicable non-conformance(s) have been rectified.

8.0 INTEGRATED LOGISTICS SUPPORT (ILS)

8.1 Maintenance Concept

8.1.1 For the purposes of the ILS, the MEU is considered part of the WTU and must be included and treated as such in ILS deliverables.

8.1.2 The **WTU**, **ASU and WSU** will be maintainable by CAF operators and technicians in both field and base environments, with maintenance tasks generally divided as follows:

8.1.2.1 **Operator Maintenance** – consisting generally of simple tasks such as preliminary diagnosis of faults, visual inspections, consumables replenishment, minor preventive and corrective maintenance, and cleaning.

8.1.2.1.1 Any Operator Maintenance task requiring support equipment must have that support equipment available to the Operator and mounted on, or otherwise supplied with, the WTU, ASU, or WSU.

8.1.2.2 **Technician Maintenance, First Line** – consisting of preventive and minor corrective maintenance tasks by repair or replacement of parts, in the field, using the standard maintenance tools of the EME and WFE trades (T VEH 00129 and EPPE 00305) and any provided with the WTU, ASU or WSU. Task duration generally less than four (4) hours.

8.1.2.3 The more in-depth maintenance tasks, consisting of major corrective maintenance tasks, reconditioning of assemblies and component rebuilds, will be done through the Support Contract.

8.1.3 The **WTS Trailer** will be maintainable by CAF operators and technicians in both field and base environments, with maintenance tasks generally divided as follows:

8.1.3.1 **Operator Maintenance** – consisting generally of simple tasks such as preliminary diagnosis of faults, visual inspections, minor preventive and corrective maintenance, and cleaning. Task duration less than one (1) hour.

8.1.3.1.1 Any Operator Maintenance task requiring support equipment must have that support equipment available to the Operator and mounted on, or otherwise supplied with, the WTS Trailer.

8.1.3.2 **Technician Maintenance, First Line** – consisting of preventive and minor corrective maintenance tasks by repair or replacement of parts, in the field, using the standard maintenance tools of the EME and WFE trades and any provided with the WTS Trailer. Task duration generally less than four (4) hours.

8.1.3.3 **Technician Maintenance, Second Line** – consisting of major corrective maintenance requiring additional tools, specialized personnel, STTE, controlled environmental conditions or specific infrastructure requirements. Task duration generally between four (4) and twenty-four (24) hours.

8.2 Instruments, Decals, Data Plates and Warnings

8.2.1 The Contractor must deliver all instruments, decals and data plates marked in metric units.

8.2.2 Where international symbols are not possible, the Contractor must provide bilingual markings in English and Canadian French, as per paragraph 8.3.6.

8.2.3 The Contractor must provide warning and precautionary data plates in both official languages of Canada (English and Canadian French) in order to protect personnel and equipment, as per paragraph 8.3.6.

8.3 Technical Publication Package

8.3.1 The Contractor must prepare and deliver the following Technical Publications:

8.3.1.1 WTS Operator Manual

8.3.1.1.1 The Contractor must provide a WTS Operator Manual IAW CDRL WTS-ILS-202 at Appendix A2.18 to this ANNEX A1 (pg. 133) and its associated DID WTS-ILS-202 at Appendix A3.18 to this ANNEX A1 (pg.192).

8.3.1.1.2 The WSU must be excluded from the WTS Operator Manual (see 8.3.1.13).

8.3.1.2 WTU Operator Quick Reference Card

8.3.1.2.1 The Contractor must provide a WTU Operator Quick Reference Card IAW CDRL WTS-ILS-203 at Appendix A2.19 to this ANNEX A1 (pg.134) and its associated DID WTS-ILS-203 at Appendix A3.19 to this ANNEX A1 (pg.194).

8.3.1.2.2 Front Matter is not required for the WTU Operator Quick Reference Card (see 8.3.2).

8.3.1.3 WTS Maintenance Manual

8.3.1.3.1 The Contractor must provide a WTS Maintenance Manual IAW CDRL WTS-ILS-204 at Appendix A2.20 to this ANNEX A1 (pg. 135) and its associated DID WTS-ILS-204 at Appendix A3.20 to this ANNEX A1 (pg. 196).

8.3.1.3.2 The WSU must be excluded from the WTS Maintenance Manual (see 8.3.1.13).

8.3.1.4 WTS Permissive Repair Schedule and Standard Repair Times

8.3.1.4.1 The Contractor must provide a WTS Permissive Repair Schedule and Standard Repair Times IAW CDRL WTS-ILS-205 at Appendix A2.21 to this ANNEX A1 (pg. 136) and its associated DID WTS-ILS-205 at Appendix A3.21 to this ANNEX A1 (pg. 198).

8.3.1.5 WTS Illustrated Parts Manual

8.3.1.5.1 The Contractor must provide a WTS Illustrated Parts Manual IAW CDRL WTS-ILS-206 at Appendix A2.22 to this ANNEX A1 (pg. 137) and its associated DID WTS-ILS-206 at Appendix A3.22 to this ANNEX A1 (pg. 199).

8.3.1.5.2 The scope of parts and assemblies to be included in the WTS Illustrated Parts Manual must match that of the Provisioning Parts Breakdown (see 8.4.4.1 below).

8.3.1.5.3 The WTS Illustrated Parts Manual does not need to be provided in Canadian French.

8.3.1.5.4 The WSU must be excluded from the WTS Illustrated Parts Manual (see 8.3.1.13).

8.3.1.6 WTS Operator Training Package

8.3.1.6.1 The Contractor must provide a WTS Operator Training Package IAW CDRL WTS-ILS-207 at Appendix A2.23 of this ANNEX A1 (pg. 138) and its associated DID WTS-ILS-207 at Appendix A3.23 to this ANNEX A1 (pg. 201).

8.3.1.7 WTU and ASU Technician Training Package

8.3.1.7.1 The Contractor must provide a WTU and ASU Technician Training Package IAW CDRL WTS-ILS-208 at Appendix A2.24 to this ANNEX A1 (pg. 139) and its associated DID WTS-ILS-208 at Appendix A3.24 to this ANNEX A1 (pg. 203).

8.3.1.8 WTS Preservation, Storage and Reactivation Instructions

8.3.1.8.1 The Contractor must provide a WTS Preservation, Storage and Reactivation Instructions IAW CDRL WTS-ILS-209 at Appendix A2.25 to this ANNEX A1 (pg. 140) and its associated DID WTS-ILS-209 at Appendix A3.25 to ANNEX A1 (pg. 205).

8.3.1.9 WTS Stowage, Shipping and Handling Instructions

8.3.1.9.1 The Contractor must provide a WTS Stowage, Shipping and Handling Instructions IAW CDRL WTS-ILS-210 at Appendix A2.26 to this ANNEX A1 (pg. 141) and its associated DID WTS-ILS-210 at Appendix A3.26 to this ANNEX A1 (pg. 207).

8.3.1.10 WTS Equipment Data Summary

8.3.1.10.1 The Contractor must provide a WTS Equipment Data Summary IAW CDRL WTS-ILS-211 at Appendix A2.27 to this ANNEX A1 (pg. 142) and its associated DID WTS-ILS-211 at Appendix A3.27 to ANNEX A1 (pg. 209).

8.3.1.11 MEU, ASU and WSU Stowage Maps

8.3.1.11.1 The Contractor must provide **MEU, ASU and WSU Stowage Maps** IAW CDRL WTS-ILS-212 at Appendix A2.28 to this ANNEX A1 (pg. 143), and its associated DID WTS-ILS-212 at Appendix A3.28 to this ANNEX A1 (pg. 211).

8.3.1.11.2 Front Matter is not required for the MEU, ASU and WSU Stowage Maps (see 8.3.2).

8.3.1.12 WTU Process and Flow Diagrams

8.3.1.12.1 The Contractor must provide a **WTU Process and Flow Diagrams** IAW CDRL WTS-ILS-213 at Appendix A2.29 to this ANNEX A1 (pg. 144), and its associated DID WTS-ILS-213 at Appendix A3.29 to this ANNEX A1 (pg. 212).

8.3.1.12.2 Front Matter is not required for the WTU Process and Flow Diagrams (see 8.3.2).

8.3.1.13 WSU Operation, Maintenance and Parts Handbook

8.3.1.13.1 The Contractor must provide a WSU Operation, Maintenance and Parts Handbook IAW CDRL WTS-ILS-214 at Appendix A2.30 to this ANNEX A1 (pg.145) and its associated DID WTS-ILS-214 at Appendix A3.30 to this ANNEX A1 (pg. 214).

8.3.2 Front Matter

8.3.2.1 The Contractor must include the following in each Technical Publication (except where noted above):

8.3.2.1.1 A cover page (a template will be provided by the Integrated Logistics Support Manager (ILSM) showing the date the publication was issued and the model/system designation;

8.3.2.1.2 A List of Effective Pages;

8.3.2.1.3 A Revision Control Table;

8.3.2.1.4 A detailed Table of Contents and List of Figures & Tables; and

8.3.2.1.5 An Acronyms and Abbreviations table

8.3.3 Supplementary Information

8.3.3.1 The Contractor must provide supplementary information, in the portions of text that require it, with one or more of the following notices, in the order listed:

8.3.3.1.1 **Danger.** The danger advisory will be used to draw attention to an extreme, violent and continuous hazard to life;

8.3.3.1.2 **Warning.** The warning advisory will be used to emphasize an operating or maintenance procedure, practice, condition, statement, which if not strictly observed, could result in injury to or death of personnel;

8.3.3.1.3 **Caution.** The caution advisory will be used to emphasize an operating or maintenance procedure, practice, condition, statement, which if not strictly observed, could result in maintenance, damage to or destruction of equipment, loss of mission effectiveness or long-term health hazards to personnel;

8.3.3.1.4 **Note.** The note will be used to point out a procedure, event or practice that it is desirable to highlight; and,

8.3.3.1.5 **Example.** The example will be used when required to clarify the preceding text.

8.3.4 The Contractor must provide the following certificates, for each accepted first-language Publication produced under ANNEX A1 paragraph 8.3, to the DND ILSM for approval:

8.3.4.1 DND590 - Certificate of Validation; and

8.3.4.2 DND591 - Certificate of Compliance.

8.3.5 Copyright - Foreground and Background Information

8.3.5.1 The Contractor must incorporate the copyright symbol and one of the following notices into the Technical Publications, for all Foreground and Background information that is subject to copyright regardless of the form or medium upon which it is recorded:

8.3.5.1.1 Intellectual Property (IP) in Foreground that belongs to the Contractor: "© (insert year) (insert IP owner). This deliverable was delivered under Contract no. XXXX and contains Foreground Intellectual Property (IP). Her Majesty the Queen in Right of Canada has a royalty-free and perpetual license to the IP and is permitted to use, reproduce, modify, and translate, including authorizing contractors to reproduce, modify, and translate, in whole or in part the deliverable for all government purposes including competitive tendering. Refer to the contract terms for additional details as required."

8.3.5.1.2 Intellectual Property (IP) in Background Information: "© (insert year) (insert IP owner). This deliverable was delivered under Contract no. XXXX and contains Background Intellectual Property (IP). Her Majesty the Queen in Right of Canada has a royalty-free and perpetual license to the Background IP for the purpose of exercising its rights in the Contract deliverables and Foreground Information. The license includes the rights to use, reproduce, modify, and translate this deliverable, and further includes the right to authorize others to use, reproduce, modify, and translate, in whole or in part the deliverable for all government purposes including competitive tendering. Refer to the contract terms for additional details as required."

8.3.6 Official Languages Requirements

8.3.6.1 The Contractor must deliver all Technical Publications in English and Canadian French (unless indicated above).

8.3.6.2 The Contractor must have all Technical Publications translated by certified translators, such as members of an authorized provincial association of translators, to ensure the quality of translated text.

8.3.6.3 The Contractor must ensure all translations are consistent with approved DND terminology. Approved terminology sources, in order of priority, are as follows:

8.3.6.3.1 Canadian Oxford Dictionary for English and Le Petit Robert for French

8.3.6.3.2 Termium, PSPC Translation Bureau Linguistic Data Bank (http://www.termiumplus.gc.ca/)

8.3.6.3.3 The International Electrotechnical Commission's *Electropedia* Online Vocabulary (http://www.electropedia.org/)

8.3.6.3.4 Terminology agreed-upon between the Contractor and DND ILSM, especially for terms specific to the WTS.

8.3.6.4 The Contractor must provide to the DND ILSM for approval, certificates of Translation Accuracy Check (DND2515) for each translated Publication produced under para 8.3 of ANNEX A1.

8.3.7 The Contractor must review and accept responsibility for the validity of all (both their own and all sub-Contractors) information found in the Technical Publications

8.4 Provisioning Documentation

8.4.1 The Provisioning Documentation (PD) lists and describes in detail all the procurable parts — regardless of source of supply — that make up the WTS as well as all specialized and specific items required to support the use and maintenance of the WTS. These include consumables required to operate and maintain the WTS (chemicals, specific lubricants, etc.) and specialized equipment (special tools, training aids, reusable transport and storage containers, etc.) specific to the WTS.

8.4.2 The PD allows the WTS's ILSM to plan and implement a sparing and support strategy. The PD will also help to determine the scope of repairs possible, thereby guiding the content of the WTS Maintenance Manual (see 8.3.1.3).

8.4.3 Additionally, the PD, especially the Provisioning Parts Breakdown (see 8.4.4.1), the matching WTS Illustrated Parts Manual (see 8.3.1.5) and the WSU Operation, Maintenance and Parts Handbook (see 8.3.1.13) will help future-proof the support of the WTS by providing the information necessary to the future LCMM of the WTS to address maintenance or supply issues that may occur outside of this contract that may not be addressed in the Publications supplied by it. It is therefore crucial that the PD be thorough and complete, with no "black box" assemblies present within. Further in-contract discussions related to the PD will take place during the ILS Kick-Off Meeting (see 3.6.4), the Initial Provisioning Guidance Conference (see 8.5), and the Initial Provisioning Conference (see 8.6).

8.4.4 The Contractor must prepare and deliver the following Provisioning Documentation:

8.4.4.1 Provisioning Parts Breakdown

8.4.4.1.1 The Contractor must provide a Provisioning Parts Breakdown IAW CDRL WTS-ILS-215 at Appendix A2.31 to this ANNEX A1 (pg.146) and its

associated DID WTS-ILS-215 at Appendix A3.31 to this ANNEX A1 (pg.216).

8.4.4.2 Supplementary Provisioning Technical Documentation

8.4.4.2.1 The Contractor must provide Supplementary Provisioning Technical Documentation IAW CDRL WTS-ILS-216 at Appendix A2.32 to this ANNEX A1 (pg. 147) and its associated DID WTS-ILS-216 at Appendix A3.32 to this ANNEX A1 (pg. 218).

8.4.4.3 Special Tools and Test Equipment List

8.4.4.3.1 The Contractor must provide a Special Tools and Test Equipment List IAW CDRL WTS-ILS-217 at Appendix A2.33 to this ANNEX A1 (pg. 148) and its associated DID WTS-ILS-217 at Appendix A3.33 to this ANNEX A1 (pg.219).

8.4.4.4 Equipment Delivery Status Report

8.4.4.4.1 The Contractor must provide an Equipment Delivery Status Report IAW CDRL WTS-ILS-218 at Appendix A2.34 to this ANNEX A1 (pg.149), and its associated DID WTS-ILS-218 at Appendix A3.34 to this ANNEX A1 (pg. 221).

8.4.4.5 Materiel Identification Data Set

8.4.4.5.1 The Contractor must generate and provide a Materiel Identification Data Set (MIDS) for all serialized items IAW CDRL WTS-ILS-219 at Appendix A2.35 (page 150) to Annex A, and its associated DID WTS-ILS-219 at Appendix A3.35 (page 223) to this ANNEX A.

8.4.4.5.2 Should Canada exercise purchase options for serialized items, the Contractor must provide an updated MIDS for the new items only, under the same terms as 8.4.4.5.1 above.

8.5 Initial Provisioning Guidance Conference

8.5.1 The Contractor must hold and chair an Initial Provisioning Guidance Conference (IPGC).

8.5.1.1 The purpose of the IPGC is to clarify and explain the requirements of the Provisioning Documentation referred to in the contract in preparation for the Initial Provisioning Conference.

8.5.1.2 The IPGC team will normally consist of no more than two (2) DND representatives and should last no longer than one (1) day.

8.5.2 Refer to Meeting Documentation requirements found at ANNEX A1 para. 3.6.6.

8.6 Initial Provisioning Conference

8.6.1 The Contractor must hold and chair an Initial Provisioning Conference (IPC). The IPC will occur after the Contractor has delivered Provisioning Documentation (PD) suitable for a successful IPC as determined by the DND ILS Manager.

8.6.2 The purpose of an IPC is to allow DND to verify that the Provisioning Documentation reflects the current and complete configuration of the equipment being procured by comparing it against the Illustrated Parts Manual and Supplementary Provisioning Technical Documentation. It is also used to select the range of spares required to support the system during an initial period of service of two (2) years. For this purpose, the Contractor must provide:

8.6.2.1 A suitable conference facility with projector(s), and three (3) unrestricted, hard-wired, broadband Internet access points through Ethernet (RJ45) connections;

8.6.2.2 Engineering and product support assistance;

8.6.2.3 The equipment for physical examination;

8.6.2.4 Engineering, reliability and maintainability data; and

8.6.2.5 Modification data, if applicable.

8.6.3 Refer to Meeting Documentation requirements found at ANNEX A1 para. 3.6.6.

8.7 Identification Plates

8.7.1 The Contractor must provide Identification Plates – Design Template & Populated Designs IAW CDRL WTS-ILS-220 at Appendix A2.35 to this ANNEX A1 (pg. 150) and its associated DID WTS-ILS-220 at Appendix A3.36 to this ANNEX A1 (pg. 224).

8.7.2 The Contractor must attach Identification Plates to the following components for ease of tracking within the Canadian Forces Supply System:

8.7.2.1 Prime Equipment;

8.7.2.2 Wiring harnesses and cables;

8.7.2.3 Spares;

8.7.2.4 STTE;

8.7.2.5 Training Equipment;

8.7.2.6 Transportation, Shipping, Storage Containers that are not single-use;

8.7.2.7 Support Equipment (excluding common tools), and

8.7.2.8 Automatic Test Equipment.

8.8 Controlled & Non-Controlled Goods List

8.8.1 Contractor must provide the Controlled & Non-Controlled Goods List with the Demilitarization Code (DMC) IAW CDRL WTS-ILS-221 at Appendix A2.37 to this ANNEX A1 (pg. 152) and its associated DID WTS-ILS-221 at Appendix A3.37 to this ANNEX A1 (pg. 225).

8.9 Identification Labels for Storage and Shipment, and Packaging Codes

8.9.1 The Contractor must supply all parts and equipment, packaged and packed as per D-LM-008-001/SF-001 following:

8.9.1.1 Level B Limited Military Package;

8.9.1.2 Level B Limited Military Pack;

8.9.2 The Contractor must label all packaging, produced under 8.9.1 above, as per D-LM-008-002/SF-001, using D-LM-008-011/SF-001 to prepare the required codes for packaging and preservation.

8.9.3 The Contractor must provide Identification Labels for Storage and Shipment, and Packaging Codes IAW CDRL WTS-ILS-222 at Appendix A2.38 to this ANNEX A1 (pg. 153), and its associated DID WTS-ILS-222 at Appendix A3.38 to this ANNEX A1 (pg. 227).

8.10 List of Items to be Supported (for Support SOW)

8.10.1 The Contractor must provide a List of Items to be Supported IAW CDRL WTS-ILS-223 at Appendix A2.39 to this ANNEX A1 (pg. 154), and its associated DID WTS-ILS-223 at Appendix A3.39 to this ANNEX A1 (pg. 229).

8.11 Training Sessions

8.11.1 The Contractor must provide the Training Session(s) after delivery of the first WTS.

8.11.1.1 Scheduling of the Training Session(s) will be done after contract award, and jointly planned between the DND and the Contractor.

8.11.2 The Contractor must provide Training Session(s) consisting of: (Note: Quantity and location of sessions described in the deliverables table)

8.11.2.1 Operator Training Session (train-the-trainer type) for one (1) to 10 students per course, with a course length of four (4) days.

8.11.3 The Contractor must provide the Training Session(s) in English. The instructor(s) must be bilingual or have assistance from a bilingual Subject Matter Expert in order to understand and answer questions from students in both official languages; English and Canadian French.

8.11.4 The Contractor must provide Instructor(s) that are Subject Matter Experts on the WTS equipment being provided.

8.11.5 The Contractor must use the approved and accepted **WTS Operator Training Package** for the Training Session(s), and course lessons must follow the content found within the training package.

8.11.6 The Contractor must provide the course material listed within the **WTS Operator Training Package** CDRL as being 'Issued to Students at Training Session(s)', and all course material and handouts must be provided in English and Canadian French.

8.11.7 The Contractor must use the WTS(s) and additional training material identified in the **WTS Operator Training Package Instructor Lesson Plan**, for the Training Session.

8.11.7.1 The Contractor must provide the additional training material that is listed in the **WTS Operator Training Package Instructor Lesson Plan** as 'supplied by the Contractor'.

8.11.7.2 The Contractor must set up the WTS(s) and additional training material that is listed in the **WTS Operator Training Package Instructor Lesson Plan** as 'supplied by the Contractor', for the Training Session.

8.12 Warranty Support Plan

8.12.1 The Contractor must provide a **Warranty Support Plan** IAW CDRL WTS-ILS-224 at Appendix A2.40 to this ANNEX A1 (pg. 155), and its associated DID WTS-ILS-224 at Appendix A3.40 to this ANNEX A1 (pg. 236).

8.13 Data Deliverable Format

8.13.1 Unless otherwise specified as a specific requirement, the Contractor must deliver all of the soft copies of data deliverables, in formats compatible with the office software currently in use by the DND as listed:

8.13.1.1 Microsoft (MS) Windows 10 Enterprise Operating System (OS);

8.13.1.2 MS Internet Explorer (IE) 9.0 with 256 Bit Encryption;

8.13.1.3 MS Office Professional Plus 2013 (Word, Excel, Access, PowerPoint and Outlook);

8.13.1.4 Adobe Acrobat X; and

8.13.1.5 WinZip 8.1 SR-1;

9.0 ENVIRONMENTAL MANAGEMENT AND ASSESSMENT

9.1 General

9.1.1 In accordance with the Prohibition of Certain Toxic Substances Regulations (SOR/2012-285), the Contractor must not incorporate the substances listed under this regulation in any part of the equipment

9.1.2 In accordance with the Prohibition of Asbestos and Products containing Asbestos Regulations (SOR/2018-196), the Contractor must offer asbestos-free equipment.

9.1.3 In accordance with the Products Containing Mercury Regulations (SOR/2014-254), if mercury is present in any part of the equipment, the Contractor must comply with the mercury content limit in regulation SOR/2014-254. If such substances must be used, the Contractor must:

9.1.3.1 Inform the Technical Authority by identifying the substance(s).

9.1.3.2 Identify the specific location within the equipment and the quantity.

9.1.4 In accordance with the Polychlorinated Biphenyls (PCBs) Regulations (SOR/2008-273), if PCBs are present in any part of the equipment, the Contractor must comply with the regulation. If such substances must be used, the Contractor must:

9.1.4.1 Inform the Technical Authority by identifying the substance(s).

9.1.4.2 Identify the specific location within the equipment and the quantity.

9.1.4.3 Certify that there is no technically- or economically-feasible PCB-free alternative.

9.2 Environmental Management System

9.2.1 The Contractor must implement and maintain an Environmental Management System which is consistent with the principles presented in ISO 14001. Certification to this standard is preferred but not mandatory.

9.2.2 The Contractor must have a formalized set of procedures and control measures in place to demonstrate environmental compliance and minimize environmental impact of the work.

9.2.3 The Contractor must use low-risk chemical products for equipment maintenance and repair where feasible. Low-risk chemical products are defined as those that do not contain substances regulated under the Canadian Environmental Protection Act, 1999 and listed on Schedule 1 of the Canadian Environmental Protection Act.

9.2.4 Prior to the commencement of work, the Contractor must have in place an Emergency / Spill Response Plan and also processes and procedures for the identification, management, handling and disposal of all substances, pollutants and material covered by the applicable municipal, territorial, provincial, federal environmental protection statutes and regulations.

9.2.5 The Contractor must update the Equipment Environmental Assessment (EEA), after it is delivered, under the following circumstances:

9.2.5.1 There are changes related to the items identified on the Hazardous Substances & Chemical Products table; or

9.2.5.2 New items/components are introduced as a result of configuration changes or modifications that contain hazardous substances and chemical products identified in the EEA.

9.3 Environmental Packaging Labels

9.3.1 The Contractor must label and ship goods falling within the Hazardous Products Act, R.S.C. 1985, C. H-3 and regulation(s) thereunder, in accordance with the said Act and regulation(s).

9.3.1.1 The Contractor must clearly identify the contents of the hazardous material with labels, and the Safety Data Sheet must explain what those hazards are.

9.4 Equipment Environmental Assessment

9.4.1 The Contractor must prepare and submit an EEA IAW CDRL WTS-ILS-225 at Appendix A2.41 (page 156) to ANNEX A1, and its associated DID WTS-ILS-225 at Appendix A3.41 (page 238) to this ANNEX A1.

9.4.2 The Contractor may provide Commercial in Confidence information in a separate document.

10.0 TECHNICAL REQUIREMENTS

10.1 Overview

10.1.1 The Contractor must comply with all specified requirements for each component of the WTS, stated in:

10.1.1.1 A1.0 APPENDIX: WTS TECHNICAL SPECIFICATION

A1.0 APPENDIX: WTS TECHNICAL SPECIFICATION	VERIFICATION METHOD	VERIFICATION PHASE
A1.1 System Requirements		
A1.1.1 **General**		
A1.1.1.1 The WTS must be a self-contained system comprising all the components and tools necessary for the transport, setup, operation and teardown of the system.		
A1.1.1.2 The WTS must allow all CAF personnel that fall within the 5th to 95th percentile range outlined in the DCIEM Report 98-CR-15 for CAF personnel, to carry out all functions and duties related to operating and maintaining the WTS.		
A1.1.1.3 The WTS must consist of the following major components and is further described in detail under section A1.2:		
A1.1.1.3.1 Water Treatment Unit (WTU);		
A1.1.1.3.2 Miscellaneous Equipment Unit (MEU);		
A1.1.1.3.3 Water Storage Units (WSU);		
A1.1.1.3.4 Arctic Sustainment Unit (ASU); and		
A1.1.1.3.5 Trailer.		
A1.1.1.4 The WTS is expected to have an in-service duration of 20 years.		
A1.1.2 **Certification**	CERTIFICATION	FIRST PRODUCTION ARTICLE
A1.1.2.1 The WTS electrical components and equipment must be certified Canadian Standards Association (CSA) or equivalent national/international standard.		

A1.1.2.2	The WTS plumbing components, materials and equipment that comes in contact with potable water must comply with American National Standards Institute / National Sanitation Foundation (ANSI/NSF) Standard 61.	CERTIFICATION	FIRST PRODUCTION ARTICLE
A1.1.3	**Modes of Employment**		
A1.1.3.1	**Primary**	DEMO	FIRST PRODUCTION ARTICLE
A1.1.3.1.1	The WTU and MEU are mounted on the Trailer for both transport and operation. Operation is defined as producing potable water.		
A1.1.3.2	**Secondary**		
A1.1.3.2.1	The WTU and MEU are transported by means other than the Trailer. The WTU and MEU are off-loaded from its transport and operated while on the ground. Operation is defined as producing potable water.		
A1.1.3.3	**Cold Weather Operations**	CERTIFICATION	FIRST PRODUCTION ARTICLE
A1.1.3.3.1	For cold weather operations, units may require some or all of the equipment found within the ASU. Units not equipped with an ASU will receive an ASU through the CAF supply system when needed. The ASU is intended for logistical storage and movement of the cold weather components.		
A1.1.3.4	**Humanity/Domestic Operations**		
A1.1.3.4.1	For International Humanity or National Domestic operations where delivery and distribution of water to the local population is the predominant mission, the WSU may be used.		
A1.1.4	**Set up**	DEMO	FIRST PRODUCTION ARTICLE
A1.1.4.1	In its primary mode of employment, two operators must be able to set up the system within sixty (60) minutes after arrival at the selected water source.		

A1.1.4.2	Where conditions warrant the use of the ASU with the WTS, two (2) operators must be able to set up the system within two (2) hours after arrival at the selected water source. For verification purposes, assume that that ASU shelter is already assembled and that there are 75 minutes remaining to complete the set up.	DEMO	FIRST PRODUCTION ARTICLE
A1.1.4.3	Set up is defined as the system fully ready to pump water from the raw water source into the WTU and does not include run-up time associated with flushing out filter systems prior to producing potable water.		
A1.1.5	**Operation**	DEMO	FIRST PRODUCTION ARTICLE
A1.1.5.1	Once set up, the sustained operation of the system in its primary mode of employment must be achievable by one qualified operator.		
A1.1.5.1.1	Operation is defined as at least twenty (20) consecutive hours of water production and no more than four (4) hours of maintenance in a twenty-four (24) hour period.		
A1.1.6	**Teardown**	DEMO	FIRST PRODUCTION ARTICLE
A1.1.6.1	In its primary mode of employment and the system producing potable water, two operators must be able to tear down and prepare the system for a road move, including attaching the trailer to its prime mover in sixty (60) minutes.		
A1.1.6.2	Where conditions warrant the use of the ASU with the WTS, two (2) operators must be able to tear down and prepare the system for a road move, including attaching the trailer to its prime mover in two (2) hours. For verification purposes, assume that that ASU shelter is already disassembled and that there are 75 minutes remaining to complete the tear down in preparation for a road move.		
A1.1.7	**Transportability**		
A1.1.7.1	**Road Transportability**	ANALYSIS	

A1.1.7.1.1	In its primary mode of employment, the prime movers of the system are the MSVS Standard Military Pattern (SMP) (refer to references C-30-K77-000/MA-000 and C-30-K77-000/MB-000) and the MSVS Militarized Commercial off the Shelf (MilCOTS) truck (refer to reference C-32-F40-000/MB-Z01).		FIRST PRODUCTION ARTICLE
A1.1.7.1.2	The WTU, MEU, WSU and ASU must be transportable by the MSVS Pallet Load System (PLS) Trailer (8'x20') and commercial low-bed Trailers using the PLS or mounted on the flat deck secured in place by ISO twist locks.	ANALYSIS	FIRST PRODUCTION ARTICLE
A1.1.7.1.3	In its primary mode of employment, the system must have emergency towing and recovery facilities that comply with STANAG 4478 ED 1.	INSPECTION	FIRST PRODUCTION ARTICLE
A1.1.7.1.4	In its primary mode of employment, track width must not exceed or be less than the track width limits of the two (2) prime movers.		
A1.1.7.1.5	The WTS tongue weight must be between 10% and 15% of the GTW, regardless of the percentage laden.	ANALYSIS	FIRST PRODUCTION ARTICLE
A1.1.7.1.6	The fully loaded WTS while moving at cross-country speeds (3-5 km/h) must ford water depths of no less than 750 mm, without experiencing ingress of water that would be detrimental to the function of the trailer or compromise the water quality, IAW STANAG 2805 ED.5.	INSPECTION	FIRST PRODUCTION ARTICLE
A1.1.7.2	**Rail Transportability**	ANALYSIS	FIRST PRODUCTION ARTICLE
A1.1.7.2.1	In its primary mode of employment, the system must be transportable by rail in Canada as specified in MIL-STD-1366E, Chapter 5.2.		
A1.1.7.3	**Sea Transportability**	ANALYSIS	FIRST PRODUCTION ARTICLE
A1.1.7.3.1	In its primary mode of employment, the system must be transportable both above deck and below deck on military and commercial cargo vessels, including Roll-on Roll-off (RORO) and Lift-on Lift-off (LOLO).		

A1.1.7.4	**Air Transportability**	ANALYSIS	FIRST PRODUCTION ARTICLE
A1.1.7.4.1	The system must be transportable in the CC-177 Globemaster III and the CC-130 Hercules transport aircraft (secondary mode of operation (dismounted) must prevail due to the 9' height limitation).		
A1.1.7.4.2	The WTU, MEU, WSU and ASU must each be capable of being transported under CH-147 Chinook helicopter on a sling.		
A1.1.8	**Tie-Down and Lifting Points**		
A1.1.8.1	In its primary mode of employment, the system must have tie-down points as per STANAG 4062 to permit securing for all means of transportation in A1.1.7.	INSPECTION	FIRST PRODUCTION ARTICLE
A1.1.8.2	In its primary mode of employment, the system must have lifting points to permit lifting and loading for all means of transportation in A1.1.7 Lifting points must be installed on the same horizontal plane and allow for a balanced (horizontal) load to facilitate lifting.		
A1.1.8.3	Stencil or decal markings must be applied at each lifting and tie-down point, indicating their intended use and any limitations.		
A1.1.8.4	The Trailer must meet the Interface Standards for Lifting and Tie-down Provisions IAW MIL-STD-209 (Revision K).		
A1.1.8.5	The Trailer must be equipped with permanent, integrally attached tie-downs so that the Trailer with full payload of WTU and MEU mounted, can be tied down for transport.		
A1.2	**WTS Components Requirements**		
A1.2.1	**Water Treatment Unit (WTU)**	INSPECTION	FIRST PRODUCTION ARTICLE
A1.2.1.1	The WTU is contained in a weatherproof and insulated enclosure as described in A1.2.1.3		

A1.2.1.2	The WTU houses the Water Filtration and Treatment System, the Electrical System, the Automated Control System and an Internal Heater.		
A1.2.1.3	Enclosure	INSPECTION	FIRST PRODUCTION ARTICLE
A1.2.1.3.1	The weatherproof and insulated Enclosure is based on a QUADCON ISO container. The common ISO container requirements are outlined in A1.3.4		
A1.2.1.3.2	The Enclosure must have an integral external ladder to enable access to the roof of the Enclosure.		
A1.2.1.3.3	The Enclosure must contain one (1) Fire Extinguisher NSN 4210-21-908-1048 (or equivalent), which is mounted on the wall using mounting brackets, NSN 4210-21-886-3387 (or equivalent), in the interior of the Enclosure near one of the main access panels or doors.	INSPECTION	FIRST PRODUCTION ARTICLE
A1.2.1.3.4	The Enclosure must contain, as a minimum, two (2) external weatherproof 120 VAC duplex receptacles, NEMA 5-20RA type with covers.		
A1.2.1.3.4.1	Receptacles must be equipped with GFCI breakers on the receptacles or in the electrical distribution panel (EDP).		
A1.2.1.3.5	The Enclosure must contain an easily accessible inner Holder for the WTS Operator Manual (see 8.3.1.1) and WTU Operator Quick Reference Card (see 8.3.1.2) which must be of adequate size to accept both documents and must:		
A1.2.1.3.5.1	Be rigid;		
A1.2.1.3.5.2	Be transparent;		
A1.2.1.3.5.3	Have a partially-open bottom or drain holes so no water can accumulate; and		

A1.2.1.3.5.4	Be located on a flat vertical surface that is not a door or an access panel.		
A1.2.1.3.6	The Enclosure must contain an easily accessible inner Holder for the WTU Process and Flow Diagrams (see 8.3.1.12), which must be of adequate size to accept the Process and Flow Diagrams and must:		
A1.2.1.3.6.1	Be rigid;		
A1.2.1.3.6.2	Be transparent;		
A1.2.1.3.6.3	Have a partially-open bottom or drain holes so no water can accumulate;		
A1.2.1.3.6.4	Be located on a flat vertical surface that is not a door or an access panel;		
A1.2.1.3.7	Access Panels and Doors	INSPECTION	FIRST PRODUCTION ARTICLE
A1.2.1.3.7.1	The Enclosure must incorporate doors and access panels to allow the operation and maintenance of all systems housed in the WTU.		
A1.2.1.3.7.2	The doors and access panels must be:		
A1.2.1.3.7.2.1	Lockable;		
A1.2.1.3.7.2.2	Weathertight;		
A1.2.1.3.7.2.3	Have hold-open fixtures and TIR securing gadgets (i.e. provisions for padlocking and custom sealing, locking mechanisms, tamper-evident devices).		
A1.2.1.3.8	Lighting	INSPECTION	FIRST PRODUCTION ARTICLE
A1.2.1.3.8.1	The Enclosure must have white interior LED lighting of 540 lux illuminance.		

A1.2.1.3.8.2	The Enclosure must have red blackout lighting for operations in a tactical military scenario.		
A1.2.1.3.8.3	Lighting must be controlled by a three-way switch which enables the operator to select off, white light or red blackout lighting.		
A1.2.1.3.8.3.1	The switching configuration must allow the user to select either lighting modes directly from the "OFF" position, to ensure that the operator does not have to switch through the white light mode to get to blackout mode, flashing the white LEDs in a tactical situation.		
A1.2.1.3.9	The Enclosure must be equipped with dedicated external electrical connections to provide power to all Cold Weather Ancillary Equipment described in para 1.2.3.2.		
A1.2.1.4	**Water Filtration and Treatment System**		
A1.2.1.4.1	**General**		
A1.2.1.4.1.1	The Water Filtration and Treatment System comprises the Plumbing, Clean in Place System, Pre-treatment Module, the Reverse Osmosis Module and the Chlorine Injection System.		
A1.2.1.4.1.2	The Water Filtration and Treatment System must operate in the following modes of operation:		
A1.2.1.4.1.2.1	Pre-treatment, In-process Single Pass Reverse Osmosis and Chlorine Injection.		
A1.2.1.4.1.2.2	Pre-treatment, In-process Double Pass Reverse Osmosis and Chlorine Injection.		
A1.2.1.4.2	**Plumbing**	CERTIFICATION	FIRST PRODUCTION ARTICLE
A1.2.1.4.2.1	The WTS Plumbing must meet the National Plumbing Code (NPC) of Canada (see Reference NPC 2015).		

A1.2.1.4.2.2	Stainless steel type 904L or 316L must be used for pipes and bends for welding and for similar parts without crevices.		
A1.2.1.4.2.3	Where crevices occur such as at flange connections, in valves and pumps, stainless steel type 254 SMO or similar with greater than or equal to 3% Mo must be used.		
A1.2.1.4.2.4	Piping must be pickled and passivated in order to protect against chloride attack.		
A1.2.1.4.2.5	Backing gas must be used when welding to avoid the weld oxide film forming a base for crevice corrosion.		
A1.2.1.4.2.6	Water flow velocity must be optimized (depending on the stainless steel type and applicable process) in order to promote the forming and maintenance of a passive film.		
A1.2.1.4.2.7	The design must avoid having areas where water can pool and stagnate and thus risk contamination.		
A1.2.1.4.2.8	All pipes must be self-draining.	CERTIFICATION	FIRST PRODUCTION ARTICLE
A1.2.1.4.3	**Clean In Place System**	INSPECTION	FIRST PRODUCTION ARTICLE
A1.2.1.4.3.1	The Clean in Place System enables the cleaning, sanitization and preservation of the Water Filtration and Treatment System by providing a means to circulate chemical cleaning solutions, including citric acid and chlorine, through the Water Filtration and Treatment System.		
A1.2.1.4.3.2	When chlorine is used as part of the Clean in Place process and the Reverse Osmosis Membranes being used are susceptible to chlorine, the Reverse Osmosis Module must be physically isolatable to prevent the chlorine from coming into contact with the Reverse Osmosis membranes.		

A1.2.1.4.3.3	A drain valve must be installed at the lowest point to allow complete drainage of the cleaning solution following the sanitization process.		
A1.2.1.4.4	**Pre-treatment Module**		
A1.2.1.4.4.1	General	INSPECTION	FIRST PRODUCTION ARTICLE
A1.2.1.4.4.1.1	The Pre-treatment Module comprises the Intake Strainer Assembly, Multi Stage Mechanical Filtration System, and De-Chlorination System.		
A1.2.1.4.4.1.2	The role of the Pre-treatment Module is to pre-treat source water in order to maximize the efficiency of the Reverse Osmosis Module and to maximize the life of the Reverse Osmosis membranes by minimizing fouling, scaling and Reverse Osmosis membrane degradation.		
A1.2.1.4.4.2	Intake Strainer Assembly		
A1.2.1.4.4.2.1	The Intake Strainer Assembly consists of a quick-connect and disconnect intake strainer and a floatation buoy or collar.	INSPECTION	FIRST PRODUCTION ARTICLE
A1.2.1.4.4.2.2	The Intake Strainer Assembly design must follow the Department of Fisheries and Oceans (DFO) Freshwater Intake End-of-Pipe Fish Screen Guideline (see the References, DFO / 5080).		
A1.2.1.4.4.2.3	The Intake Strainer Assembly will be stored and transported in the MEU.		
A1.2.1.4.4.3	Mechanical Filtration System	TEST	FIRST PRODUCTION ARTICLE
A1.2.1.4.4.3.1	The Mechanical Filtration System must take feed water that has passed through the intake strainer and prepare the water for the Reverse Osmosis Module.		

A1.2.1.4.4.3.2	As fouling is expected to be one of the major challenges facing the system, a design approach that uses successive contaminant size exclusion must be employed to prevent fouling of downstream filters in the series.		
A1.2.1.4.4.3.3	All filtration technologies forming part of the Mechanical Filtration System must be self-cleaning through an automated back-pulsing or backwash capability that is initiated by a performance degradation.		
A1.2.1.4.4.3.4	The following types of filtration technologies will not be considered in the Mechanical Filtration System:		
A1.2.1.4.4.3.4.1	Sedimentation tanks, including chemical additives;		
A1.2.1.4.4.3.4.2	Disposable filters and cartridges;		
A1.2.1.4.4.3.4.3	Ozone systems; and		
A1.2.1.4.4.3.4.4	In process chemical injection		
A1.2.1.4.4.3.5	Physical Access		
A1.2.1.4.4.3.5.1	The physical layout of the Mechanical Filtration System must allow unrestricted access to both the feed water and brine ends of each and every potential system being considered. This will allow for loading, unloading and troubleshooting of those elements.	INSPECTION	FIRST PRODUCTION ARTICLE
A1.2.1.4.4.3.5.2	Sample points must be incorporated to facilitate localizing and troubleshooting potential problems.		
A1.2.1.4.4.4	De-Chlorination System	CERTIFICATION	FIRST PRODUCTION ARTICLE
A1.2.1.4.4.4.1	The De-Chlorination System must reduce free chlorine in the source water down to the required concentration to prevent degradation of the Reverse Osmosis membranes from a water source with a chlorine level of up to and including 3 PPM.		

A1.2.1.4.4.4.2	If Reverse Osmosis membranes are used that are not susceptible to degradation from a water source with a chlorine level of 3 PPM, a De-Chlorination System is not necessary.		
A1.2.1.4.4.4.3	The De-Chlorination System must have an electronically controlled bypass with a manual backup when the system is not needed.	INSPECTION	FIRST PRODUCTION ARTICLE
A1.2.1.4.4.4.4	The absence of chlorine must be automatically monitored downstream of the De-Chlorination System.		
A1.2.1.4.4.4.4.1	In the event that the level of chlorine exceeds the threshold of the level which would cause irreparable damage to the Reverse Osmosis membranes, the High-Pressure Pump must be automatically shut off.		
A1.2.1.4.5	**Reverse Osmosis Module**	CERTIFICATION	FIRST PRODUCTION ARTICLE
A1.2.1.4.5.1	The Reverse Osmosis (RO) Module must perform membrane water filtration process in the Ionic Range of the Filtration Spectrum between 0.0001 micron and 0.001 micron (Hyperfiltration).		
A1.2.1.4.5.2	The RO pressure vessels must be corrosion proof and tested at 1.5 times the working pressure of the vessel.	CERTIFICATION	FIRST PRODUCTION ARTICLE
A1.2.1.4.5.3	The RO membranes must resist bacterial growth and reduce hydrolysis effects at pH extremes.		
A1.2.1.4.5.4	The RO Module must enable the Reverse Osmosis membranes to remain installed for seventy-two (72) hours when the WTS is not producing water without the need for removal and preservation of the Reverse Osmosis membranes.	INSPECTION	FIRST PRODUCTION ARTICLE
A1.2.1.4.5.5	High Pressure Pump	ANALYSIS	

A1.2.1.4.5.5.1	The HPP must be made of Duplex 2205 and Super Duplex 2507 stainless steel and carbon reinforced PEEK for high corrosion resistance and strength.		FIRST PRODUCTION ARTICLE
A1.2.1.4.5.5.2	The HPP must operate 8,000 hours before maintenance is required.		
A1.2.1.4.5.5.3	In the event of a loss of water pressure, the HPP must have an automated safety shut-off.		
A1.2.1.4.5.5.4	No oil lubrication must be required for the HPP.		
A1.2.1.4.6	**Chlorination Injection System**	CERTIFICATION	FIRST PRODUCTION ARTICLE
A1.2.1.4.6.1	Chlorine must be added to the permeate water to prevent microbiological contamination while permeate is stored and distributed after being processed through the Water Filtration and Treatment System.		
A1.2.1.4.6.2	The Chlorination Injection System must be an automated system that maintains a constant injection rate into the permeate water at ≥ 0.5 mg/L and ≤ 2.0 mg/L.		
A1.2.1.4.6.3	The injection rate must be pre-selectable by the operator.	INSPECTION	FIRST PRODUCTION ARTICLE
A1.2.1.4.6.4	A sample point must be located prior to the Chlorination Injection System so that a sample of the permeate water without chlorine can be taken to conduct a present-absence test for microbiological contaminants.		
A1.2.1.5	**Electrical System**	CERTIFICATION	FIRST PRODUCTION ARTICLE
A1.2.1.5.1	Electrical components of the WTU must have an Ingress Protection (IP) rating of no less than:		

A1.2.1.5.1.1	IP 55 for internal components; and	CERTIFICATION	FIRST PRODUCTION ARTICLE
A1.2.1.5.1.2	IP 67 for external components.	CERTIFICATION	FIRST PRODUCTION ARTICLE
A1.2.1.5.2	**Generator Set**		
A1.2.1.5.2.1	The Generator Set, as primary power source must provide power, during continuous operation to the WTS under the worst-case load conditions (assumed to be cold weather operations when all cold weather ASU components are required and the system is operating in double pass reverse osmosis) with a 20% safety margin.	ANALYSIS	FIRST PRODUCTION ARTICLE
A1.2.1.5.2.2	The Generator Set must use an Absorbed Glass Mat (AGM) maintenance-free battery.	INSPECTION	FIRST PRODUCTION ARTICLE
A1.2.1.5.2.3	The Generator Set must function on commercial diesel fuel No.2 conforming to ASTM D975-15A as well as NATO F-34 (JP-8) fuel.	TEST	FIRST PRODUCTION ARTICLE
A1.2.1.5.2.4	A six (6) meter long exhaust hose must be provided to funnel the exhaust away from the WTU. The exhaust hose must be stored in the MEU when not in use.	INSPECTION	FIRST PRODUCTION ARTICLE
A1.2.1.5.2.5	Integral Fuel Tank		
A1.2.1.5.2.5.1	The Integral Fuel Tank (IFT) must supply the fuel needed by the Generator Set to operate for eight (8) hours without refueling under worst-case loading conditions as outlined in A1.2.1.5.2.1.	TEST	FIRST PRODUCTION ARTICLE
A1.2.1.5.2.5.2	The IFT must have a liquid level limit control device and spill containment.	INSPECTION	

A1.2.1.5.2.5.3	The IFT must be fully drainable by gravity.		
A1.2.1.5.2.5.4	The IFT must have a valve to remove water settled at the bottom of the fuel tank.		
A1.2.1.5.2.5.5	The operator must be able to add fuel to the fuel tank in both the primary and secondary mode of employment of the WTS.		
A1.2.1.5.2.6	Externally-mounted fuel fittings must be incorporated to enable connection to an external fuel source.		FIRST PRODUCTION ARTICLE
A1.2.1.5.2.7	The Generator Set and IFT must be separated from the remainder of the WTU by a fire-resistant wall. .		
A1.2.1.5.2.8	The floor under the Generator Set and IFT must capture spilled liquids and fuel and subsequently allow the controlled drainage of spilled liquids and fuel.		
A1.2.1.5.3	**Electrical Distribution Panel**		
A1.2.1.5.3.1	The Electrical Distribution Panel (EDP) must monitor and control all power circuits.		
A1.2.1.5.3.2	Power circuits must be protected by automatic Ground Fault Circuit Interrupter(s) (GFCI).		
A1.2.1.5.3.3	The EDP must have Fault Indicators (visual and audible) to indicate malfunctions of the electrical system through the use of warning lights and alarms.	INSPECTION	FIRST PRODUCTION ARTICLE
A1.2.1.5.3.4	The EDP must have circuit breakers to allow isolation of equipment in the event of failure.		
A1.2.1.5.3.5	The EDP must have Battery voltage level indicator.		
A1.2.1.5.3.6	The EDP must have an emergency shut-off switch for the Generator Set.		

A1.2.1.5.4	**External Power Connection**	INSPECTION	FIRST PRODUCTION ARTICLE
A1.2.1.5.4.1	The Electrical System must connect to and operate from North American and European external power grids.		
A1.2.1.5.4.1.1	When operating on 50Hz external power, the maximum allowable reduction in production rate as defined in para 1.4.1.4 is 20%.		
A1.2.1.5.4.1.2	When operating on 50Hz external power, the maximum allowable reduction in feed pump suction lift as defined in para A1.2.2.8.5 is 35%.		
A1.2.1.5.4.1.3	When operating on 50Hz external power, the maximum allowable reduction in in feed pump discharge lift as defined in para A1.2.2.8.6 is 35%		
A1.2.1.5.4.1.4	When operating on 50Hz external power, the maximum allowable reduction in in distribution pump discharge elevation difference as defined in para 1.2.2.10.6 is 35%		
A1.2.1.5.4.1.5	The life expectancies and service intervals of each component of the WTU must not decrease when operating on 50Hz external power.		
A1.2.1.5.4.2	Fifteen (15) m long power cable assemblies must be provided for external power connection.		
A1.2.1.5.4.3	The power cable assemblies must have pin and sleeve connectors (4P5W, IP67): male on one end and female on the other end.		
A1.2.1.5.4.4	The electrical power transfer between the Generator Set and external power must be performed manually and automatically.		
A1.2.1.5.4.5	A 4-pole transfer switch (switched-neutral system) must be implemented.		

A1.2.1.5.4.6	Voltage selection must be performed manually and automatically.		
A1.2.1.5.4.7	The phase sequence protection or reverse phase monitoring with Fault Indicators (visual and audible) must be implemented.		
A1.2.1.5.4.8	The contractor must provide two (2) power cables to transmit power from the WTU enclosure to the HQSS shelter power panel.	INSPECTION	FIRST PRODUCTION ARTICLE
A1.2.1.5.4.8.1	Each power cable must be no less than 10m in length.	INSPECTION	FIRST PRODUCTION ARTICLE
A1.2.1.5.4.8.2	Each power cable must be no more than 15m in length.	INSPECTION	FIRST PRODUCTION ARTICLE
A1.2.1.5.4.8.3	The power cables must be compatible with the Ground Fault Circuit Interrupt (GFCI) Power Panel, which is rated at 120/208VAC, 60 Hz, 60A, Three Phase.	INSPECTION	FIRST PRODUCTION ARTICLE
A1.2.1.5.4.8.4	The power cables must be compatible and with the power inlet on the Ground Fault Circuit Interrupt (GFCI) Power Panel, which is a 560B9W pin and sleeve inlet.	INSPECTION	FIRST PRODUCTION ARTICLE
A1.2.1.5.4.8.5	The power cables must be IEC 60309 compliant at every interfacing location.	INSPECTION	FIRST PRODUCTION ARTICLE
A1.2.1.5.5	**Grounding Rods**	INSPECTION	FIRST PRODUCTION ARTICLE
A1.2.1.5.5.1	The Electrical System must be equipped with Grounding Rod(s) and the required cabling to connect them back to the Enclosure.		
A1.2.1.5.5.2	The Grounding Rod(s) configuration must be IAW MIL-STD-188-124B.		
A1.2.1.6	**Automated Control System**		

A1.2.1.6.1	The WTU must have an Automated Control System to enable the production of potable water without continuous direct intervention by the operator once the WTS has been set up for operation.	DEMO	FIRST PRODUCTION ARTICLE
A1.2.1.6.2	The Automated Control System must have a digital interface that meets the following requirements:		
A1.2.1.6.2.1	Must have a sun-readable screen with adjustable brightness		
A1.2.1.6.2.2	Buttons or touch screen must be activated by an operator wearing CAF winter gloves; and		
A1.2.1.6.2.3	Language must be Canadian French and English, selectable by the operator.		
A1.2.1.6.3	The digital interface must allow the operator to:	DEMO	FIRST PRODUCTION ARTICLE
A1.2.1.6.3.1	Program the desired mode of operation as per A1.2.1.4.1.2 (single pass or double pass RO);		
A1.2.1.6.3.2	Set parameters for water production;		
A1.2.1.6.3.3	Monitor the status of the Water Filtration and Treatment System; and		
A1.2.1.6.3.4	Input changes to the parameters for water production.		
A1.2.1.6.4	The digital interface must display the following operational information:	DEMO	FIRST PRODUCTION ARTICLE
A1.2.1.6.4.1	Intake Water temperature;		
A1.2.1.6.4.2	Water TDS (intake, permeate and concentrate);		
A1.2.1.6.4.3	Water turbidity in-process control (intake, pre-RO / post-RO);		
A1.2.1.6.4.4	Water conductivity (pre-RO / post-RO);		

A1.2.1.6.4.5	Chlorine levels (post de-chlorination);	DEMO	FIRST PRODUCTION ARTICLE
A1.2.1.6.4.6	Water pressures;		
A1.2.1.6.4.7	Water flow rates.		
A1.2.1.6.5	The digital interface must provide specific warnings to the operator when abnormal operating conditions arise, including:		
A1.2.1.6.5.1	WTU malfunction;		
A1.2.1.6.5.2	Low intake pressure;		
A1.2.1.6.5.3	High TDS content in source water;		
A1.2.1.6.5.4	High TDS content in permeate water;		
A1.2.1.6.5.5	High free chlorine levels post De-chlorination (greater than 0.1 PPM);		
A1.2.1.6.5.6	Conductivity change;		
A1.2.1.6.5.7	Loss of system pressure;		
A1.2.1.6.5.8	Power supply malfunction;		
A1.2.1.6.5.9	Cleaning required;		
A1.2.1.6.5.10	Low fuel in the internal fuel tank; and		
A1.2.1.6.5.11	Any other parameters that are necessary to troubleshoot the system.		

A1.2.1.6.6	In the event that the digital interface is rendered inoperable, the WTU must be instrumented with backlight gauges that provide the operational information that the operator requires to produce potable water and have a separate pressure transmitter to send the signals to the digital interface.	DEMO	FIRST PRODUCTION ARTICLE
A1.2.1.6.7	**Data Log**	DEMO	FIRST PRODUCTION ARTICLE
A1.2.1.6.7.1	The Automated Control System must have an electronic Data Log that records data from the WTU.		
A1.2.1.6.7.2	The Data Log must have a USB connector or a memory card reader to allow the download of data.		
A1.2.1.6.7.3	The downloaded data must be compatible with Microsoft Office Excel.		
A1.2.1.7	Internal Heater	TEST	FIRST PRODUCTION ARTICLE
A1.2.1.7.1	The Internal Heater must enable the operation of the WTS in cold weather operations as per A1.5.2.		
A1.2.2	**Miscellaneous Equipment Unit (MEU)**		
A1.2.2.1	**Enclosure**	INSPECTION	FIRST PRODUCTION ARTICLE
A1.2.2.1.1	The MEU is contained in a weatherproof enclosure which is based on a QUADCON ISO container. The common QUADCON ISO container requirements are outlined in A1.3.4		
A1.2.2.1.2	The Enclosure must have an integral external ladder to enable access to the roof of the Enclosure.		

A1.2.2.1.3	The Enclosure must have two (2) detachable steel cantilevers support of 1200 mm overall length each designed to clip into the corner lift points on the top of the ISO container, and be removed when not in use. The Enclosure cantilevers will be used to create an extension/offset for any camouflage nets (or tarpaulins) on one wall of the ISO container (or they can be used to hoist up the cam net), and for lifting of the Water Storage Tanks (refer to A1.2.2.11.1).	DEMO	FIRST PRODUCTION ARTICLE
A1.2.2.1.4	Two (2) ratcheted hand crank winches with lifting capacity 100 kg each must be provided to facilitate lifting of the empty Water Storage Tanks for cleaning and must be linked to the Enclosure cantilevers.		
A1.2.2.1.5	Electrical components of the MEU must have an Ingress Protectionrating of IP55.	CERTIFICATION	FIRST PRODUCTION ARTICLE
A1.2.2.1.6	The Enclosure must contain one (1) Fire Extinguisher, NSN 4210-21-908-1048 (or equivalent), which is mounted on wall mounting brackets, NSN 4210-21-886-3387(or equivalent), in the interior of the Enclosure near the main access door.	INSPECTION	FIRST PRODUCTION ARTICLE
A1.2.2.1.7	The Enclosure must contain a First Aid Kit, NSN 6545-21-111-8439, mounted in the interior of the MEU near the main access door. The First Aid Kit will be provided as GFE.		
A1.2.2.1.8	The interior of the Enclosure must be fitted with storage bins, cabinets, shelving and reels required to store and transport the Ancillary Equipment outlined in A1.2.2.2, the Consumables outlined in A1.2.2.3 and the Cold Weather Ancillary Equipment outlined in A1.2.3.2		
A1.2.2.1.8.1	If the WTU has the capacity to store material in addition to housing the systems specified in A1.2.1.2, a portion of the Ancillary Equipment must be stored in the WTU to free up additional stowage space in the MEU.		
A1.2.2.1.9	The MEU Enclosure must have installed within it a MEU Stowage Map Poster Holder that must:	INSPECTION	FIRST PRODUCTION ARTICLE

A1.2.2.1.9.1	Be rigid;	INSPECTION	FIRST PRODUCTION ARTICLE
A1.2.2.1.9.2	Be transparent;		
A1.2.2.1.9.3	Have a partially-open bottom or drain holes so no water can accumulate;		
A1.2.2.1.9.4	Be located on a flat vertical surface that is not a door or an access panel; and,		
A1.2.2.1.9.5	Allow the user to read the MEU Stowage Map Poster without removing it from its Holder.		
A1.2.2.1.10	Access Doors	INSPECTION	FIRST PRODUCTION ARTICLE
A1.2.2.1.10.1	The enclosure must incorporate access doors to facilitate loading and unloading of Ancillary Equipment and Consumables to achieve set up requirements outlined in para. A1.1.4 and teardown requirements outlined in para. A1.1.6.		
A1.2.2.1.10.2	The doors lockable, weathertight and have hold-open fixtures and TIR securing gadgets (i.e. provisions for padlocking and custom sealing, locking mechanisms, tamper-evident devices).		
A1.2.2.1.11	Lighting	INSPECTION	FIRST PRODUCTION ARTICLE
A1.2.2.1.11.1	The Enclosure must have white interior LED lighting of 540 lux illuminance.		
A1.2.2.1.11.2	The Enclosure must have red blackout lighting for operations in a tactical military scenario.		
A1.2.2.1.11.3	Lighting must be controlled by a three-way switch which enables the operator to select off, white light or red blackout lighting.		
A1.2.2.1.11.3.1	The switching configuration must allow the user to select either lighting modes from the “OFF” position, to ensure that the		

	operator does not have to switch through the white light mode to get to blackout mode, flashing the white LEDs in a tactical situation.		
A1.2.2.1.11.4	The electrical system for the lighting must allow for the use of both shore power and the WTU generator's power.	INSPECTION	FIRST PRODUCTION ARTICLE
A1.2.2.1.11.4.1	The power input(s) must be on the outside of the MEU QUADCON with weatherproof connections.		
A1.2.2.2	**Ancillary Equipment**	INSPECTION	FIRST PRODUCTION ARTICLE
A1.2.2.2.1	The ancillary equipment must include the following items:		
A1.2.2.2.1.1	Three (3) Feed Water Hoses (refer to A1.2.2.4);		
A1.2.2.2.1.2	Ten Concentrate Water Hoses (refer to para. A1.2.2.5);		
A1.2.2.2.1.3	Eleven Potable Water Hoses (refer to para. A1.2.2.6);		
A1.2.2.2.1.4	One (1) Water Distribution Nozzles (refer to para. A1.2.2.7)		
A1.2.2.2.1.5	One (1) Feed Pump (refer to A1.2.2.8);		
A1.2.2.2.1.6	One (1) Reverse Osmosis Membrane Preservation Kit (refer to A1.2.2.9);		
A1.2.2.2.1.7	One (1) Distribution Pump (refer to A1.2.2.10);		
A1.2.2.2.1.8	Three (3) Water Storage Tanks (refer to A1.2.2.11);		
A1.2.2.2.1.9	If necessary, three (3) Adaptors for the Potable Water Hoses to connect them to the Water Storage Tanks (refer to A1.2.2.11);		
A1.2.2.2.1.10	One (1) Adaptor for the Potable Water Hoses to connect them with a top inlet fitment (refer to A1.2.4.2.3.1.4);		

A1.2.2.2.1.11	One (1) Spill Kit (refer to A1.2.2.12);		
A1.2.2.2.1.12	One (1) Intake Strainer Assembly (refer to A1.2.1.4.4.2);	INSPECTION	FIRST PRODUCTION ARTICLE
A1.2.2.2.1.13	One (1) Exhaust Hose for Generator Set (refer to A1.2.1.5.2.4);		
A1.2.2.2.1.14	Two (2) Life Preserver Vest (refer to A1.2.2.13);		
A1.2.2.2.1.15	Two (2) Wading Overalls (refer to A1.2.2.14);		
A1.2.2.2.1.16	One (1) Water Quality Analysis Kit (refer to A1.2.2.15);		
A1.2.2.2.1.17	One (1) Turbidity Verification Kit (refer to A1.2.2.16); and		
A1.2.2.2.1.18	One (1) Potable Water Lab Kit (Refer to A1.2.2.17).		
A1.2.2.3	**Consumables**	INSPECTION	FIRST PRODUCTION ARTICLE
A1.2.2.3.1	The MEU must include the consumables necessary to sustain forty-five (45) days of consecutive operation at twenty (20) working hours plus four (4) hours a day of maintenance per day.		
A1.2.2.4	**Feed Water Hoses**	INSPECTION	FIRST PRODUCTION ARTICLE
A1.2.2.4.1	The Feed Water Hoses of A1.2.2.2, must meet the following requirements:		
A1.2.2.4.1.1	Fitted with 316L camlock fittings (one male fitting on one end and one female fitting on the opposing end).		
A1.2.2.4.1.2	Must be no less than 7.5 m in length.		
A1.2.2.4.1.3	Must be no more than 10 m in length.		
A1.2.2.4.1.4	Must be of sturdy construction with low friction/abrasion so that it can be dragged over any surfaces without being perforated.		

A1.2.2.4.1.5	Must provide high vacuum characteristics.		
A1.2.2.4.1.6	Must have an exceptional low temperature flexibility.	INSPECTION	FIRST PRODUCTION ARTICLE
A1.2.2.4.1.7	Must have a minimum bend radius of 130 mm without kinking or restricting flow;		
A1.2.2.4.1.8	Must be weather-resistant;		
A1.2.2.4.1.9	Must be resistant to common impurities found in fresh water, sea water, Calcium and magnesium, bicarbonate, carbonate, mineral acid H_2SO_4, HCl, CO_2, hydrogen ion, Sulfate, Chloride, Nitrate, Fluoride, Sodium, silica, Iron, Aluminium, Oxigen, Hydrogen Sulfide, Dissolved Solids, Suspended Solids.		
A1.2.2.4.1.10	Identified in large writing “Source Water” and “Eau d’Alimentation” and be colour-coded by a distinctive yellow colour.		
A1.2.2.5	**Concentrate Water Hoses**	INSPECTION	FIRST PRODUCTION ARTICLE
A1.2.2.5.1	The Concentrate Water Hoses of A1.2.2.2, must meet the following requirements:		
A1.2.2.5.1.1	Fitted with 316L camlock fittings (one male fitting on one end and one female fitting on the opposite end);		
A1.2.2.5.1.2	Must be no less than 7.5 m in length.		
A1.2.2.5.1.3	Must be no more than 10 m in length.		
A1.2.2.5.1.4	Covered with an abrasion and weather resistant synthetic cover.		
A1.2.2.5.1.5	Must be able to operate in a large temperature range IAW AECTP 230, Edition 1, Leaflets 2311/1 through 2311/3 and STANAG 2895, Edition 1, Annex C		

A1.2.2.5.1.6	Must be resistant to common impurities found in fresh water, sea water including Calcium and magnesium, bicarbonate, carbonate, mineral acid H_2SO_4, HCl, CO_2, hydrogen ion, Sulfate, Chloride, Nitrate, Fluoride, Sodium, silica, Iron, Aluminium, Oxygen, Hydrogen Sulfide, Dissolved Solids, Suspended Solids		
A1.2.2.5.1.7	Identified in large writing “Concentrate Water” and “Eau de concentrat“, and be colour-coded by a distinctive red colour.	INSPECTION	FIRST PRODUCTION ARTICLE
A1.2.2.6	**Potable Water Hoses**	INSPECTION	FIRST PRODUCTION ARTICLE
A1.2.2.6.1	The distribution water hoses of A1.2.2.2, from the bladder to the distribution pump must meet the following requirements:		
A1.2.2.6.1.1	Fitted with 316L camlock fittings (one male fitting on one end and one female fitting on the opposing end);		
A1.2.2.6.1.2	Each camlock fittings must have dust cap or plug;		
A1.2.2.6.1.3	Each dust cap or plug will be made of the same material of the camlock fittings 316L.		
A1.2.2.6.1.4	Each dust caps and plugs will be secured to the camlock fittings with a PVC coated cable lanyard as follow:		
A1.2.2.6.1.4.1	Lanyard must be no less than 300 mm in length; and		
A1.2.2.6.1.4.2	Lanyard must be no more than 500 mm in length;		
A1.2.2.6.1.5	Must be of sturdy construction with low friction/abrasion so that it can be dragged over any kind of surfaces without being perforated;		
A1.2.2.6.1.6	Must be weather resistant synthetic cover;		

A1.2.2.6.1.7	Must be able to operate in a large temperature range IAW AECTP 230, Edition 1, Leaflets 2311/1 through 2311/3 and STANAG 2895, Edition 1, Annex C.		
A1.2.2.6.1.8	Must be resistant against commonly used chemicals and degradations due to UV radiation.		
A1.2.2.6.1.9	Resistant to all chemical used to clean and preserve the system Calcium Hypochlorite (NSN 6810-219-124-561), Cleaner MC1 – Citric Acid, Anhydrous (NSN 6810-20-010-6573), Cleaner MC4 – Decontaminating Agent (NSN 6850-20-010-6684) and Preservative MP4 – Sodium Bisulphite, Reagent (NSN 6810-20-010-7087) cleaning solutions;	INSPECTION	FIRST PRODUCTION ARTICLE
A1.2.2.6.1.10	Identified in large writing with “Potable Water” and “Eau Potable”, and be colour-coded by a distinctive blue colour.		
A1.2.2.6.1.11	Must be no less than 7.5 m in length.	INSPECTION	FIRST PRODUCTION ARTICLE
A1.2.2.6.1.12	Must be no more than 10 m in length.	INSPECTION	FIRST PRODUCTION ARTICLE
A1.2.2.7	**Water Distribution Nozzle**	INSPECTION	FIRST PRODUCTION ARTICLE
A1.2.2.7.1	The Water Distribution Nozzle of A1.2.2.2, must provide a flow of 1,250 L/h;		
A1.2.2.7.2	Must be fitted with 316L camlock to connect with potable hoses;		
A1.2.2.7.3	Must be fitted with 316L dusk cap.		
A1.2.2.7.3.1	Dusk cap must be secure to the camlock with a Cable PVC lanyard.		
A1.2.2.7.4	Must be fitted with an integral hook to be hang; and		

A1.2.2.7.5	Must permit variable flow to allow filling of various size containers.		
A1.2.2.8	**Feed Pump**	TEST	FIRST PRODUCTION ARTICLE
A1.2.2.8.1	The Feed Pump of A1.2.2.2, is intended to pump source water from the raw water source to the WTU.		
A1.2.2.8.2	The Feed Pump must be man-portable with a maximum weight of 37 kg.		
A1.2.2.8.3	The Feed Pump must have the same HP size as the Distribution Pump for commonality refer to A1.2.2.10.	TEST	FIRST PRODUCTION ARTICLE
A1.2.2.8.4	The Feed Pump must be self-priming or have a mechanical priming function.		
A1.2.2.8.5	The Feed Pump must have at least a suction lift of five (5) m from source water to the pump.		
A1.2.2.8.6	The Feed Pump must have at least a discharge lift of nine (9) m from the pump to the WTU when the three (3) Feed Water Hoses are connected together.		
A1.2.2.8.7	The Feed Pump must operate on 120/208 V with a power cord of no less than thirty (30 m).		
A1.2.2.8.8	The power cord for the Feed Pump must be equipped with a waterproof NEMA plug and must interface with a corresponding NEMA receptacle on the WTU.		
A1.2.2.8.9	The feed pump must have cam locks, with plug and lanyard, at the water inlet and outlet, 316L stainless steel type.		
A1.2.2.9	**Reverse Osmosis Membrane Preservation Kit**	INSPECTION	FIRST PRODUCTION ARTICLE
A1.2.2.9.1	The Reverse Osmosis Membrane Preservation Kit of A1.2.2.2, must be a vacuum sealing system including the membrane storage bags or		

	containers to store and protect reverse osmosis membranes from bacterial growth once they have been removed from the WTU.		
A1.2.2.9.2	The Reverse Osmosis Membrane Preservation Kit must include a rugged, air tight container to transport either individual or a group of vacuumed sealed reverse osmosis membranes. This container must be equipped with purge vents in the case of the container being transported in an unpressurized cargo aircraft.		
A1.2.2.9.3	If ceramic Reverse Osmosis Membranes are used, stowage containers must be provided to protect the membranes from breaking during all methods of transportation.		
A1.2.2.10	**Distribution Pump**		
A1.2.2.10.1	The Distribution Pump of A1.2.2.2, must be self-priming or have a mechanical priming function;	TEST	FIRST PRODUCTION ARTICLE
A1.2.2.10.2	The Distribution Pump must be man-portable with a maximum weight of 37 kg;		
A1.2.2.10.3	The Distribution Pump must operate on 120/208 V with a power cord of no less than thirty (30 m).		
A1.2.2.10.4	The power cord for the Distribution Pump must be equipped with a waterproof NEMA plug and must interface with a corresponding NEMA receptacle on the WTU.		
A1.2.2.10.5	The Distribution Pump must pump purified water from the water storage tanks to the water transport vehicle or trailers;		
A1.2.2.10.6	The Distribution Pump must be able to discharge water, through a single hose access, at a distribution point, requiring no less than 10 potable hoses with an elevation difference of no less than 5 m, between the WTU and the water transport vehicle or trailers (These being higher than the WTU);		

A1.2.2.10.7	RESERVED		
A1.2.2.10.8	The Distribution Pump must be equipped with the camlock inlet and outlet fittings with secured dust caps and plugs; and		
A1.2.2.10.9	The Distribution Pump must have the same HP size as the Feed Pump for commonality refer to A1.2.2.8.		
A1.2.2.11	**Water Storage Tanks**	INSPECTION	FIRST PRODUCTION ARTICLE
A1.2.2.11.1	The Water Storage Tank of A1.2.2.2 must be NSN 5430-20-012-2725 (or equivalent).		
A1.2.2.12	**Spill Kit**	INSPECTION	FIRST PRODUCTION ARTICLE
A1.2.2.12.1	The Spill Kit of A1.2.2.2 must be NSN 4235-21-920-4185 (or equivalent).		
A1.2.2.13	**Life Preserver Vest**		
A1.2.2.13.1	The Life Preserver Vest of A1.2.2.2 must be NSN 4220-20-000-0262 and will be provided as GFE.	INSPECTION	FIRST PRODUCTION ARTICLE
A1.2.2.14	**Wading Overalls**	INSPECTION	FIRST PRODUCTION ARTICLE
A1.2.2.14.1	The Wading Overalls of A1.2.2.2 must be NSN 8415-20-A0F-1690 and will be provided as GFE.		
A1.2.2.15	**Water Quality Analysis Reconnaissance Kit**	INSPECTION	FIRST PRODUCTION ARTICLE
A1.2.2.15.1	The Water Quality Analysis Reconnaissance Kit of A1.2.2.2, must be NSN 6630-21-912-5298 (or equivalent).		
A1.2.2.15.2	The Water Quality Analysis Reconnaissance Kit dimensions are 62 cm × 50 cm × 22 cm.		

A1.2.2.15.3	The Water Quality Analysis Reconnaissance Kit weight is 12.7 kg.		
A1.2.2.16	**Turbidity Verification Kit**	INSPECTION	FIRST PRODUCTION ARTICLE
A1.2.2.16.1	The Turbidity Verification Kit of A1.2.2.2, Mettler Toledo InPro 8600, must be NSN 6630-20-010-3615 and will be provided as GFE.).		
A1.2.2.17	**Potable Water Lab Kit**	INSPECTION	FIRST PRODUCTION ARTICLE
A1.2.2.17.1	The portable water lab of A1.2.2.2, must be NSN 6630-01-641-1591 (or equivalent).		
A1.2.3	**Arctic Sustainment Unit (ASU)**		
A1.2.3.1	**Enclosure**		
A1.2.3.1.1	The ASU is contained in a weatherproof enclosure which is based on a BICON ISO container. The common BICON ISO container requirements are outlined in A1.3.4.	INSPECTION	FIRST PRODUCTION ARTICLE
A1.2.3.1.2	The interior of the Enclosure must be fitted with storage bins, cabinets, tablets and reels required to store and transport the Cold Weather Ancillary Equipment outlined in A1.2.3.2		
A1.2.3.1.3	The ASU Enclosure must have installed within it an ASU Stowage Map Poster Holder that must:		
A1.2.3.1.3.1	Be rigid;		
A1.2.3.1.3.2	Be transparent;		
A1.2.3.1.3.3	Have a partially-open bottom or drain holes so no water can accumulate;		
A1.2.3.1.3.4	Be located on a flat vertical surface that is not a door or an access panel; and		

A1.2.3.1.3.5 Allow the user to read the ASU Stowage Map Poster without removing it from its Holder.		
A1.2.3.2 **Cold Weather Ancillary Equipment**	INSPECTION	FIRST PRODUCTION ARTICLE
A1.2.3.2.1 The Cold Weather Ancillary Equipment must include the following items:		
A1.2.3.2.1.1 Electrically-Heated Feed Water Hoses (refer to A1.2.3.3);		
A1.2.3.2.1.2 Electrically-Heated Concentrate Hoses (refer to A1.2.3.4);		
A1.2.3.2.1.3 Electrically-Heated Potable Water Hoses (refer to A1.2.3.5);		
A1.2.3.2.1.4 One (1) Feed Water Pump Electrically-Heated Blanket (refer to A1.2.3.6);		
A1.2.3.2.1.5 One (1) Distribution Pump Electrically-Heated Blanket (refer to A1.2.3.7); and	INSPECTION	FIRST PRODUCTION ARTICLE
A1.2.3.2.1.6 One (1) Cold Weather Shelter (refer to A1.2.3.8).		
A1.2.3.2.2 All Electrically-Heated Hoses or Electrically-Heated Sheaths or Electrically-Heated Blankets must have a daisy-chain capability in order to be electrically connected to each other.		
A1.2.3.2.3 All Electrically-Heated Hoses must be the same lengths and sizes as their non-heated counterparts outlined in paras.1.2.2.4 through 1.2.2.6.	INSPECTION	FIRST PRODUCTION ARTICLE
A1.2.3.3 **Electrically-Heated Feed Water Hoses**	INSPECTION	FIRST PRODUCTION ARTICLE
A1.2.3.3.1 The Electrically-Heated Feed Water Hoses, of A1.2.3.2, Sheaths or blankets must meet the following requirements:		
A1.2.3.3.1.1 Must be controlled from the WTU Electrical Distribution Panel (EDP).		

A1.2.3.3.1.2	Must have the capability to connect to the feed pump heated blanket.		
A1.2.3.3.1.3	Must have a built-in thermostatic control to prevent water from freezing;		
A1.2.3.3.1.4	Must allow connection of no less than three (3) hoses without having the water freezing/crystalizing.		
A1.2.3.3.1.5	Must heat 316L camlock fittings (one male fitting on one end and one female fitting on the opposing end).		
A1.2.3.3.1.6	Must be of sturdy construction with low friction/abrasion so that it can be dragged over any surfaces without being perforated;		
A1.2.3.3.1.7	Must be weather resistant;		
A1.2.3.3.1.8	Must be resistant to common impurities found in fresh water, sea water including Calcium and magnesium, bicarbonate, carbonate, mineral acid H_2SO_4, HCl, CO_2, hydrogen ion, Sulfate, Chloride, Nitrate, Fluoride, Sodium, silica, Iron, Aluminium, Oxigen, Hydrogen Sulfide, Dissolved Solids, Suspended Solids; and		
A1.2.3.3.1.9	Must remain flexible and be capable of being fully-coiled, fully-uncoiled, straightened, and maneuvered without damage over the full-range of climatic conditions and operating conditions outlined in A1.5.1.1.	INSPECTION	FIRST PRODUCTION ARTICLE
A1.2.3.4	**Electrically Heated Concentrate Water Hoses**	INSPECTION	FIRST PRODUCTION ARTICLE
A1.2.3.4.1	The Electrically Heated Concentrate Water Hoses of A1.2.3.2, must meet the following requirements:		
A1.2.3.4.1.1	Must be controlled from the (EDP).		
A1.2.3.4.1.2	Must have the capability to connect to the feed pump heated blanket.		

A1.2.3.4.1.3	Must have a built-in thermostatic control to prevent water from freezing;		
A1.2.3.4.1.4	Must allow connection of no less than five (5) hoses without having the water freezing/crystalizing.		
A1.2.3.4.1.5	Must heat 316L camlock fittings (one male fitting on one end and one female fitting on the opposing end).		
A1.2.3.4.1.6	Must be of sturdy construction with low friction/abrasion so that it can be dragged over any surfaces without being perforated ;		
A1.2.3.4.1.7	Must be resistant to common impurities found in fresh water, sea water including Calcium and magnesium, bicarbonate, carbonate, mineral acid H_2SO_4, HCI, CO_2, hydrogen ion, Sulfate, Chloride, Nitrate, Fluoride, Sodium, silica, Iron, Aluminium, Oxigen, Hydrogen Sulfide, Dissolved Solids, Suspended Solids and cleaner agents;		
A1.2.3.4.1.8	Must be weather resistant;	INSPECTION	FIRST PRODUCTION ARTICLE
A1.2.3.4.1.9	Must remain flexible and be capable of being fully-coiled, fully-uncoiled, straightened, and maneuvered without damage over the full-range of climatic conditions and operating conditions outlined in A1.5.1.1; and		
A1.2.3.4.1.10	Identified in large writing “Concentrate Water” and “Eau de concentrat“, and be colour-coded by a distinctive red colour.		
A1.2.3.5	**Electrically-Heated Potable Water Hoses**	INSPECTION	FIRST PRODUCTION ARTICLE
A1.2.3.5.1	The Electrically-Heated Potable Water Hoses of A1.2.3.2 must meet the following requirements:		
A1.2.3.5.1.1	Must be controlled from the (EDP).		

A1.2.3.5.1.2	Must have the capability to connect to the distribution pump heated blanket.		
A1.2.3.5.1.3	Must have a built-in thermostatic control to prevent water from freezing;		
A1.2.3.5.1.4	Must allow connection of no less than five (5) hoses without having the water freezing/crystalizing.		
A1.2.3.5.1.5	Must heat 316L camlock fittings (one male fitting on one end and one female fitting on the opposing end and attached protective caps);		
A1.2.3.5.1.6	Must be of sturdy construction with low friction/abrasion so that it can be dragged over any surfaces without being perforated ;		
A1.2.3.5.1.7	Resistant to cleaning chemical use to sanitized, clean and preserve the system.		
A1.2.3.5.1.8	Must remain flexible and be capable of being fully-coiled, fully-uncoiled, straightened, and maneuvered without damage over the full-range of climatic conditions and operating conditions outlined in A1.5.1.1; and	INSPECTION	FIRST PRODUCTION ARTICLE
A1.2.3.5.1.9	Identified in large writing “Potable Water” and “Eau Potable” and be colour-coded by a distinctive green colour.		
A1.2.3.6	**Feed Water Pump Electrically-Heated Blanket**	TEST	FIRST PRODUCTION ARTICLE
A1.2.3.6.1	The Feed Water Pump Electrically Heated Blanket of A1.2.3.2 must cover the Feed Water Pump (refer to A1.2.2.8) to prevent freezing of water.		
A1.2.3.6.2	Feed pump heated blanket heat must be controlled from the (EDP).		
A1.2.3.6.3	Must be able to connect to Feed and Concentrate heated hoses; and		

A1.2.3.6.4	Must provide self-regulating heat to protect water from freezing in the feed pump.		
A1.2.3.7	**Distribution Pump Electrically Heated Blanket**	TEST	FIRST PRODUCTION ARTICLE
A1.2.3.7.1	The Distribution Pump Electrically Heated Blanket of A1.2.3.2 must cover the Distribution Pump (refer to A1.2.2.10) to prevent freezing of water.		
A1.2.3.7.2	Distribution pump heated blanket heat must be controlled from the (EDP).		
A1.2.3.7.3	Must be able to connect to potable heated hoses; and		
A1.2.3.7.4	Must provide self-regulating heat to protect water from freezing in the distribution pump.		
A1.2.3.8	**Cold Weather Shelter**		
A1.2.3.8.1	The Cold Weather Shelter (CWS) of A1.2.3.2 must be the following Government Furnished Equipment:	DEMO	FIRST PRODUCTION ARTICLE
A1.2.3.8.1.1	Must be Headquarter Shelters System Planning SHELTER, 2-MODULE NSN 8340-20-010-9594; and		
A1.2.3.8.1.2	Must contain one (1) Portable Heater, Duct Type, 130K BTUH NSN 4520-20-010-9713.		
A1.2.4	**Water Storage Unit (WSU)**		
A1.2.4.1	**Enclosure**	INSPECTION	FIRST PRODUCTION ARTICLE
A1.2.4.1.1	The WSU is contained in a weatherproof enclosure which is based on a QUADCON ISO container. The common QUADCON ISO container requirements are outlined in A1.3.4.		

A1.2.4.1.2	The interior of the Enclosure, of the water storage container, must be equipped with a method to secure the auxiliary equipment outlined at A1.2.4.2 to avoid damaging this equipment during transportation or handling of the QUADCON ISO container.		
A1.2.4.1.3	The WSU Enclosure must have installed within it a WSU Stowage Map Poster Holder that must:	INSPECTION	FIRST PRODUCTION ARTICLE
A1.2.4.1.3.1	Be rigid;		
A1.2.4.1.3.2	Be transparent;		
A1.2.4.1.3.3	Have a partially-open bottom or drain holes so no water can accumulate;		
A1.2.4.1.3.4	Be located on a flat vertical surface that is not a door or an access panel; and,		
A1.2.4.1.3.5	Allow the user to read the WSU Stowage Map Poster without removing it from its Holder.		
A1.2.4.2	**Water Storage Ancillary Equipment**	INSPECTION	FIRST PRODUCTION ARTICLE
A1.2.4.2.1	The Water Storage Ancillary Equipment must consist of the following items:		
A1.2.4.2.1.1	No less than Twelve (12) collapsible Intermediate Bulk Containers (IBC) as described in A1.2.4.2.2;		
A1.2.4.2.1.2	One hundred IBC Liners as described in A1.2.4.2.3;		
A1.2.4.2.1.3	Three (3) IBC Thermal Blankets as described in A1.2.4.2.4;		
A1.2.4.2.1.4	Eight (8) Single Faucets as described in A1.2.4.2.5;		
A1.2.4.2.1.5	Six (6) Filling Systems as described in A1.2.4.2.6;		

A1.2.4.2.1.6	Six (6) Large Faucets as described in A1.2.4.2.7;		
A1.2.4.2.1.7	Tools required to set up and maintain the WSU IAW the Operator Maintenance Concept, ANNEX A1 paragraph 8.1.2.1; and		
A1.2.4.2.1.8	Six (6) IBC connection kits as described in A1.2.4.2.2		
A1.2.4.2.2	**Intermediate Bulk Containers**	INSPECTION	FIRST PRODUCTION ARTICLE
A1.2.4.2.2.1	The Intermediate Bulk Containers (IBCs) of A1.2.4.2 must:		
A1.2.4.2.2.1.1	Meet the applicable requirements described in CAN/CGSB-43.146-2016 (Part 1);		
A1.2.4.2.2.1.2	Store and transport 1000 L of potable water with fit-form IBC Liners that are described in A1.2.4.2.3;		
A1.2.4.2.2.1.3	Have the same footprint and include contours which allow for safe and easy stacking of one IBC directly on top of another when folded for storage/transportation;		
A1.2.4.2.2.1.4	Be individually erectable and collapsible by one operator;		
A1.2.4.2.2.1.5	Be able to be stacked atop one another; at least 3 high, when empty or when full of water.		
A1.2.4.2.2.1.5.1	When three (3) IBCs are stacked atop one another, the resulting tower must be stable on a slope of 5% grade relative to level ground.	DEMO	FIRST PRODUCTION ARTICLE
A1.2.4.2.2.1.6	Have a means of rigidly holding in place the top inlet fitment and bottom outlet fitment of the IBC Liner which is described in A1.2.4.2.3.1.4;	INSPECTION	FIRST PRODUCTION ARTICLE
A1.2.4.2.2.1.6.1	When rigidly in place, an operator must be able to fill the IBC Liner through the top inlet fitment and drain through the bottom outlet fitment;		

A1.2.4.2.2.1.7	Have a waterproof identification pocket and transparent window with a minimum size of 153 mm (6”) wide x 100 mm (4”) high that is located on the same side as the bottom outlet fitment;		
A1.2.4.2.2.1.8	Have four-way forklift entry for ease of handling;		
A1.2.4.2.2.1.9	Have two handles per side properly spaced to allow for lifting by hand;		
A1.2.4.2.2.1.10	Weigh no more than one hundred (100) kg;		
A1.2.4.2.2.1.11	Be matte black or matte grey in color.		
A1.2.4.2.2.1.12	Have a connection kit capable of connecting at least five (5) IBCs together, allowing the water from all five (5) IBCs to be drawn from a single outlet:		
A1.2.4.2.2.1.12.1	The connection kit must provide enough hoses and fittings to accommodate five (5) IBCs placed at least 1m apart from one another (as measured from the two closest points of each adjacent IBC).		
A1.2.4.2.2.1.12.2	The fittings provided with the connection kit must be compatible with the IBC liner outlet fitting.		
A1.2.4.2.2.1.12.3	When all five (5) IBCs are connected together, a hose of at least 2m long must be tied into the system to be used as a distribution point.		
A1.2.4.2.2.1.12.4	The distribution hose of the connection kit must have a valve attached on the distribution end to allow for opening and closing of the entire connected system.		
A1.2.4.2.2.1.12.5	All fittings must have camlock connectors.		

A1.2.4.2.2.1.12.6	All fittings and hoses provided with the connection kit must be sized such that the Filling System described in para A1.2.4.2.6 would receive sufficient flow while connected to the distribution hose.		
A1.2.4.2.3	**Intermediate Bulk Container Liners**		
A1.2.4.2.3.1	The IBC Liner of A1.2.4.2 must:		
A1.2.4.2.3.1.1	Be certified American National Standards Institute / National Sanitation Foundation (ANSI/NSF) Standard 61.	CERTIFICATION	FIRST PRODUCTION ARTICLE
A1.2.4.2.3.1.2	Preserve stored potable water for no less than 30 days.	INSPECTION	FIRST PRODUCTION ARTICLE
A1.2.4.2.3.1.3	Protect the stored potable water from contamination including debris, dust, mold, fungus and insects.		
A1.2.4.2.3.1.4	Have a top inlet fitment with a cap and a bottom outlet fitment with a cap;		
A1.2.4.2.3.1.4.1	The top inlet and bottom outlet fitment must be male threaded;	INSPECTION	FIRST PRODUCTION ARTICLE
A1.2.4.2.3.1.5	Be resistant to abrasion, tearing, ripping and piercing.		
A1.2.4.2.4	**IBC Thermal Blanket**	INSPECTION	FIRST PRODUCTION ARTICLE
A1.2.4.2.4.1	The IBC Thermal Blanket of A1.2.4.2 must:		
A1.2.4.2.4.1.1	Cover the IBC/IBC Liner on all sides less the bottom while allowing access to the top inlet fitment, the bottom outlet fitment, carrying handles and four-way forklift lifting mechanism without compromising the insulation;		
A1.2.4.2.4.1.2	Protect the potable water inside the IBC/IBC Liner from rapid heating or cooling due to ambient temperature changes;		

A1.2.4.2.4.1.3	Weigh less than 15 kg;		
A1.2.4.2.4.1.4	Be durable and easy to clean; and		
A1.2.4.2.4.1.5	Be black or grey in color.		
A1.2.4.2.5	**Single Faucet**		
A1.2.4.2.5.1.1	The Single Faucet of A1.2.4.2 must connect directly to the bottom outlet fitment of the IBC Liner.	INSPECTION	FIRST PRODUCTION ARTICLE
A1.2.4.2.5.1.2	Be certified American National Standards Institute / National Sanitation Foundation (ANSI/NSF) Standard 61.	CERTIFICATION	
A1.2.4.2.5.1.3	The Single Faucet must enable the filling of a single 1.5 L water bottle in under ten (10) seconds.	DEMO	
A1.2.4.2.6	**Filling System (water dispensing)**		
A1.2.4.2.6.1	The Filling System of A1.2.4.2 must connect directly to the bottom outlet fitment of the IBC Liner or IBC connecting hose.	INSPECTION	
A1.2.4.2.6.2	Be certified American National Standards Institute / National Sanitation Foundation (ANSI/NSF) Standard 61.	CERTIFICATION	
A1.2.4.2.6.3	The Filling System must enable the simultaneous filling of no less than (6) 1.5 L water bottles in under ten (10) seconds, where each water bottle is filled at an individual filling point.	DEMO	FIRST PRODUCTION ARTICLE
A1.2.4.2.6.4	Individual filling points/faucets shall be spaced no closer than 45 cm to allow adjacent users to fill bottles simultaneously.	INSPECTION	
A1.2.4.2.6.5	Faucets must have an automatic closing function to prevent wasting water.		

A1.2.4.2.6.6	End of faucet discharge tube must be threaded to allow future commercial fittings/adapters to be connected.		
A1.2.4.2.7	**Large Faucet**	INSPECTION	FIRST PRODUCTION ARTICLE
A1.2.4.2.7.1	The Large Faucet of A1.2.4.2 must connect directly to the bottom outlet fitment of the IBC Liner.		
A1.2.4.2.7.2	Be certified American National Standards Institute / National Sanitation Foundation (ANSI/NSF) Standard 61.	CERTIFICATION	
A1.2.4.2.7.3	The Large Faucet must enable the filling of a 20 L jerry can (water jug) in under thirty (30) seconds.	DEMO	
A1.2.5	**Trailer**		
A1.2.5.1	**General**	CERTIFICATION	FIRST PRODUCTION ARTICLE
A1.2.5.1.1	For the Trailer to be admissible for importation into Canada, the manufacturer must be registered as a commercial importer with Transport Canada (TC) or be a Canadian vehicle manufacturer registered with Transport Canada as a company authorized to affix the National Safety Mark to their vehicle production. The application package is available upon request from Transport Canada.		
A1.2.5.1.2	The Trailer must meet all applicable Motor Vehicle Safety Regulations at the time of its manufacture.		
A1.2.5.1.3	The expected average annual usage of the Trailer is 2000 km.		
A1.2.5.2	**ISO Twist Locks**		
A1.2.5.2.1	The Trailer must be provided with eight (8) ISO twist locks as per ISO 668 to secure the WTU and MEU.	DEMO	FIRST PRODUCTION ARTICLE
A1.2.5.2.2	The ISO twist locks must come with guides to ensure loads settle properly over the twist locks to allow easy locking.		

A1.2.5.3	**Load Criteria**	DEMO	FIRST PRODUCTION ARTICLE
A1.2.5.3.1	The WTU and MEU must be loadable and off-loadable from the Trailer on uneven ground having a side slope / longitudinal slope of 5° and at an approach angle of 5°.		
A1.2.5.4	**Chassis**		
A1.2.5.4.1	**General**	INSPECTION	FIRST PRODUCTION ARTICLE
A1.2.5.4.1.1	The Trailer Chassis must be a tandem-axle design.		
A1.2.5.4.1.2	The Trailer Chassis must be equipped with a Rear Impact Guard that is retractable or foldable, IAW Canadian Motor Vehicle Safety Standards (CMVSS) 223.		
A1.2.5.4.1.3	The Trailer must have an adjustable Rear Support Leg in order to stabilize the Trailer when it is detached from either of the two (2) prime movers.	INSPECTION	FIRST PRODUCTION ARTICLE
A1.2.5.4.1.4	The Rear Support Leg must fold or retract out of the way in a manner that will not affect any function of the Trailer.		
A1.2.5.4.1.5	The Trailer Chassis must have recessed or bush-guarded protected lights, reflectors and related components IAW MIL-STD-1179E.		
A1.2.5.4.1.6	The Trailer Chassis must have a mounting point for an anti-static strap NSN 5920-00-636-3231 (or equivalent).		
A1.2.5.4.1.7	The Trailer Chassis must have a Jerry Can (Fuel & Water) Bracket NSN 2540-21-901-5046 (or equivalent).		
A1.2.5.4.2	**Suspension**	TEST	FIRST PRODUCTION ARTICLE
A1.2.5.4.2.1	The Trailer chassis suspension system, mounts and frame must function in a manner so as to ensure that all components of the WTS remain free from damage due to shock and vibration and while		

	meeting the Transport Mission Profile outlined in Para 6.2.2.6. Table 1.		
A1.2.5.4.3	**Brakes**	INSPECTION	FIRST PRODUCTION ARTICLE
A1.2.5.4.3.1	The Trailer brake system must consist of air-actuated service brakes IAW CMVSS 121.		
A1.2.5.4.3.2	.RESERVED		
A1.2.5.4.3.3	The Trailer must be equipped with an antilock brake system that is CMVSS 121 compliant.		
A1.2.5.4.3.4	The trailer must be equipped with an external ABS malfunction indicator lamp (yellow) as detailed in CMVSS 121 Air Brake System paragraph S5.2.3.3.		
A1.2.5.4.3.5	The front of the Trailer Chassis must be equipped with air hoses, connectors and couplings and conform to STANAG 2604 ED.3, as follows:		
A1.2.5.4.3.5.1	Position of connectors; per Paragraph 4, Table 1, and Figure 1.		
A1.2.5.4.3.5.2	Nomenclature for Gladhands connectors and brake lines must be done IAW SAE J318: "Service" and "Emergency".		
A1.2.5.4.3.5.3	Identification of connector colour markings must be done IAW SAE J318:		
A1.2.5.4.3.5.4	Service Gladhands Braking Lines = Blue, and		
A1.2.5.4.3.5.5	Emergency Gladhands Braking Lines = Red.		
A1.2.5.4.3.6	The trailer must be equipped with dummy couplings mounted on the trailer to store the air brake hoses when not in use.		

A1.2.5.4.3.7	The Trailer Chassis must be equipped with parking brakes which must control and hold motionless, the WTS in its primary mode of employment, when facing in either direction, up or down, on a hard surfaced slope of no less than 20% IAW SAE J1452.	DEMO	FIRST PRODUCTION ARTICLE
A1.2.5.4.3.8	The Trailer Chassis air brake system must be provided with valves, drains or other methods of expelling moisture from all air reservoirs and lines.	INSPECTION	FIRST PRODUCTION ARTICLE
A1.2.5.4.4	**Wheels and Tires**	INSPECTION	FIRST PRODUCTION ARTICLE
A1.2.5.4.4.1	The Trailer Chassis must have the same tires as the prime movers: Michelin XZL (NSN: 2610-21-912-5892 or equivalent).		
A1.2.5.4.4.2	The Trailer Chassis must have one (1) full size spare tire and wheel assembly.		
A1.2.5.4.4.3	The Trailer Chassis must be provided with 4 suitably sized wheel chocks.		
A1.2.5.4.4.4	The Trailer Chassis must have a spare wheel carrier assembly suitable for stowage and deployment of the spare tire and wheel assembly.		
A1.2.5.4.4.5	The wheel carrier, spare tire and wheel assembly must not impede or hamper any function of the WTS.		
A1.2.5.4.4.6	The Trailer wheels must be changeable, including the removal and remounting of one (1) wheel, in no greater than 30 minutes by two (2) soldiers using only tools included with and stored within the Trailer.	DEMO	FIRST PRODUCTION ARTICLE
A1.2.5.4.4.7	The Trailer Chassis must have wheel splash and stone throw protection above all wheels and mud flaps behind the rear wheels.	INSPECTION	FIRST PRODUCTION ARTICLE
A1.2.5.4.5	**Electrical System**	INSPECTION	

A1.2.5.4.5.1	The Trailer Chassis must have a 24 VDC Standard Military Pattern (SMP) lighting system IAW STANAG 2601 ED.3. The Lamps, reflectors, and signals must be IAW MIL-STD-1179.		FIRST PRODUCTION ARTICLE
A1.2.5.4.5.2	A STANAG 4007 Edition 2 compliant inter-vehicular cable assembly must be provided and used for all electrical communication from the prime mover to the trailer.	CERTIFICATION	FIRST PRODUCTION ARTICLE
A1.2.5.4.5.3	A park socket for the inter-vehicular cable assembly and a means to secure the cable are required for when they are not in use.		
A1.2.5.4.5.4	The Trailer Chassis must have a blackout lighting system IAW STANAG 4381.		
A1.2.5.4.5.5	RESERVED		
A1.2.5.4.5.6	All WTS electrical connectors or points of connection must have an Ingress Protection rating no less than IP56 IAW NEMA IEC 60529 or equivalent.	CERTIFICATION	
A1.2.5.4.5.7	The trailer must be fitted with Breakaway connectors on all electrical cables to allow them to disconnect without causing damage to the rest of the ABS or Electrical systems if the cables are pulled by accident.		
A1.2.5.4.5.8	The trailer must be equipped with dummy couplings mounted on the trailer to store the electricals when not in use.	INSPECTION	FIRST PRODUCTION ARTICLE
A1.2.5.4.5.9	Non-permanently attached electrical system items under paragraph A1.2.5 can be stored in the MEU when not in use		
A1.2.5.4.6	**Stowage Compartments**	INSPECTION	FIRST PRODUCTION ARTICLE
A1.2.5.4.6.1	The Trailer Chassis must have integrated Stowage Compartments, and be recessed within the dimensions stated in paragraph A1.3.2.		

A1.2.5.4.6.2	The Stowage Compartments must be of adequate size in order to store four (4) manufacturer supplied wheel chocks, two (2) large Cam nets, and any other tools or equipment specifically recommended and supplied by the manufacturer.		
A1.2.5.4.6.3	The Stowage Compartments must have a locking mechanism that will accept a padlock meeting ASTM F883-04 requirement F2S2.		
A1.2.5.4.7	**Data Plates and Markings**	INSPECTION	FIRST PRODUCTION ARTICLE
A1.2.5.4.7.1	The Trailer Chassis must have a license plate holder, IAW SAE J686, mounted at the rear.		
A1.2.5.4.7.2	The Trailer Chassis must have the following information permanently affixed in a conspicuous and protected location:		
A1.2.5.4.7.2.1	The manufacturer's name, model number, model year and Vehicle Identification Number (VIN);		
A1.2.5.4.7.2.2	The GTW ratings; and		
A1.2.5.4.7.2.3	The load data.		
A1.2.5.4.8	**Drawbar and Accessories**	INSPECTION	FIRST PRODUCTION ARTICLE
A1.2.5.4.8.1	The Trailer Chassis must have a tow eye IAW STANAG 4101.		
A1.2.5.4.8.2	The Drawbar must be compatible with the height of the pintle of each of the two (2) prime movers ± 5% (based on load and tire pressure).	ANALYSIS	FIRST PRODUCTION ARTICLE

A1.2.5.4.8.3	The Drawbar must allow a swing radius between the rear of the two (2) Prime Movers and the Trailer IAW STANAG 4101, excluding the Horizontal Articulation Angle, which must be no less than 54°.		
A1.2.5.4.8.4	The Trailer Chassis tow eye must have a setting for being secured in the fixed position, so that it can be towed by Vehicles with a rotating pintle hook.	INSPECTION	FIRST PRODUCTION ARTICLE
A1.2.5.4.8.5	The Trailer Chassis tow eye must rotate around the longitudinal axis.		
A1.2.5.4.8.6	The Trailer Chassis must have safety chains that are sufficient in length and possess hooks at the ends of these safety chains that are compatible with the clevises of the two (2) prime movers.	ANALYSIS	FIRST PRODUCTION ARTICLE
A1.2.5.4.8.7	The Trailer must have an adjustable front support leg in order to raise or lower the tongue, and stabilize the WTS when it is detached from either of the two (2) prime movers.	INSPECTION	FIRST PRODUCTION ARTICLE
A1.2.5.4.8.7.1	The front support leg must fold or retract out of the way in a manner that will not affect the function of the WTS when it is attached to either of the two (2) prime movers.	ANALYSIS	FIRST PRODUCTION ARTICLE
A1.2.5.5	**Walkways**		
A1.2.5.5.1	The Trailer must be equipped with a non-slip surface set of stairs, walkways and guardrails to allow access for the operation and maintenance of the WTU and MEU in the primary mode of employment of the WTS.	DEMO	FIRST PRODUCTION ARTICLE
A1.2.5.5.2	The stairs walkways and guardrails must be detachable and stored on the Trailer.		FIRST PRODUCTION ARTICLE
A1.2.5.5.3	The walkways must support three (3) personnel with weights IAW DCIEM Report 98-CR-15 for CF personnel.	ANALYSIS	

A1.2.5.5.4 Dimensions of the walkways and requirements for guardrails must meet the Canada Occupational Health and Safety Regulations (SOR/86-304) requirements.		FIRST PRODUCTION ARTICLE
A1.3 Physical Characteristics		
A1.3.1 **Weight**	CERTIFICATION	FIRST PRODUCTION ARTICLE
A1.3.1.1 The following weight restrictions must be adhered to:		
A1.3.1.1.1 WTS in its Primary Configuration (A1.1.3.1):10,000 kg.		
A1.3.2 **Size**	CERTIFICATION	FIRST PRODUCTION ARTICLE
A1.3.2.1 The dimensions of the WTS in its primary mode of employment and tires inflated to highway pressure must not exceed the following:		
A1.3.2.1.1 Height: 4.15 m;		
A1.3.2.1.2 Width: 2.6 m; and		
A1.3.2.1.3 Length: 6.0 m, including tongue.		
A1.3.3 **Colour**		
A1.3.3.1 **Exterior**	INSPECTION	FIRST PRODUCTION ARTICLE
A1.3.3.1.1 The exterior of the WTS must be painted type II, colour 34088 (Olive Drab) Chemical Agent Resistant Coating (CARC) as per MIL-DTL-53072E excluding tires, glass surfaces, wiring and nameplates, decals, and soft materials. Refer to A6.0 APPENDIX: CHEMICAL AGENT RESISTANT COATING (CARC) SYSTEM.		
A1.3.3.2 **Interior**	INSPECTION	FIRST PRODUCTION ARTICLE
A1.3.3.2.1 The interior of the WTS containers must be painted colour #17925 (gloss white) IAW AMS-STD-595 for the interior surfaces, except for all		

	doors and access panel openings to the outside which must be painted as per A1.3.3.1.1.		
A1.3.3.3	**Non-Slip Surfaces and Hand/Foot Holds**	INSPECTION	FIRST PRODUCTION ARTICLE
A1.3.3.3.1	All surfaces used for walking or as a step area to operate and maintain the WTS must have a non-slip texture which complies with MIL-PRF-24667C Performance Specification: Coating System, Non-Skid.		
A1.3.3.3.2	The WTS must have hand and foot holds to allow the operator to operate and maintain the WTS.		
A1.3.4	**BICON and QUADCON ISO Container**		
A1.3.4.1	**ISO containers Requirements:**	INSPECTION	FIRST PRODUCTION ARTICLE
A1.3.4.1.1	BICON ISO Containers is one half length of the standard 20 foot long ISO container.		
A1.3.4.1.2	QUADCON ISO Containers are one quarter length of the standard 20 foot long ISO container.		
A1.3.4.1.3	The ISO Containers must have eight (8) corner fittings IAW ISO 1161, Series 1 Freight Containers - Corner fittings - Specification, fourth edition 1984-12-15.		
A1.3.4.1.4	The ISO Containers must have four (4) Container Couplers (Horizontal Twist locks), NSN 3040-01-387-4048, Connecting Link, Rigid (or equivalent), and have its own storage place inside the respective containers.	INSPECTION	FIRST PRODUCTION ARTICLE
A1.3.4.1.5	The ISO Containers must have four-way forklift pockets for handling as per ISO 1496-1.		
A1.3.4.1.6	No component must protrude past the exterior shell of the ISO Containers, except the ISO corner fittings during inter-modular/commercial shipping mode.		

A1.3.4.1.7	The exterior dimensions of the ISO Containers must meet ISO 668, Series 1 Freight Containers - Classification, dimensions and ratings, designations 1F for QUADCONs and 1D for BICONs (see Fig. 1.2 and Fig 1.3).	ANALYSIS	FIRST PRODUCTION ARTICLE
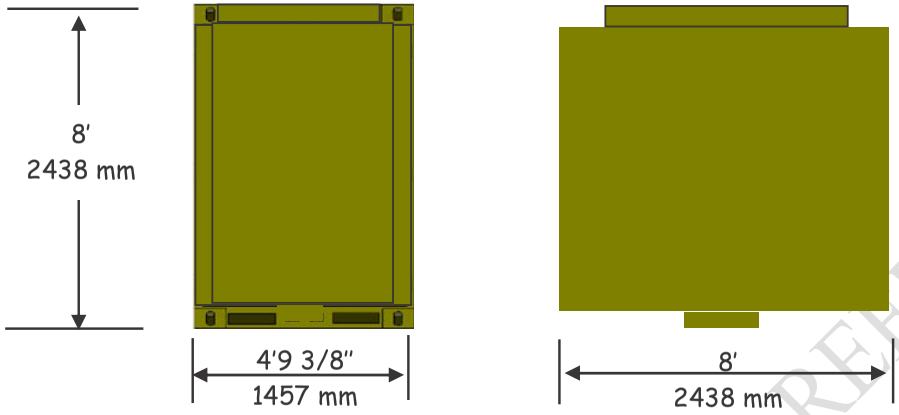			
Figure 1.2 QUADCON ISO Containers Exterior Dimensions			

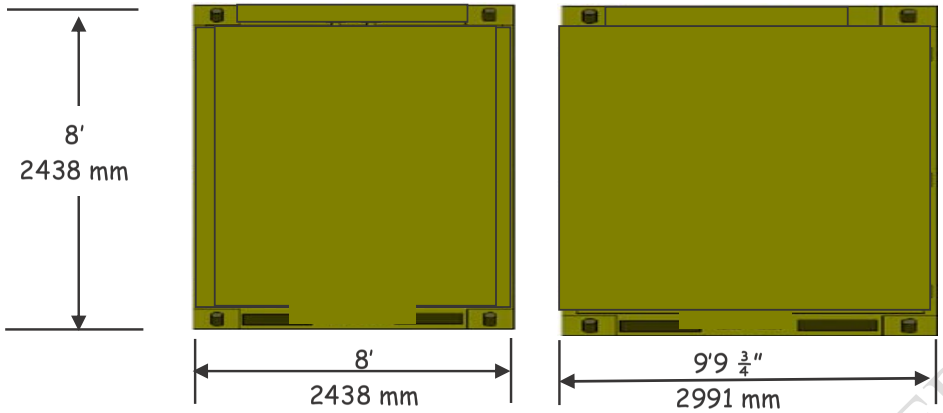		ANALYSIS	FIRST PRODUCTION ARTICLE
Figure 1.3 BICON ISO Containers Exterior Dimensions			
A1.3.4.1.8	The ISO Containers must be handled by Load Handling System (LHS), all containers-handling systems, and be shipped by commercial inter-modular shipping system (air, road, rail or sea) IAW the International Convention for Safe Containers and the Safe Containers Convention Act.	ANALYSIS	FIRST PRODUCTION ARTICLE
A1.3.4.1.9	The ISO Containers must be manufactured as per ISO 668, ISO 1161, and ISO 1496-1 (latest editions). The structural members of the containers must be made of weathering steel.	CERTIFICATION	FIRST PRODUCTION ARTICLE
A1.3.4.1.10	The ISO Containers must pass the waterproofness test as per ISO 1496-1.		
A1.3.4.1.11	The ISO Containers interior floors must be non-porous, easy to clean, slip resistant, highly durable, water resistant and scratch resistant.	INSPECTION	FIRST PRODUCTION ARTICLE
A1.3.4.2	**Certification of the ISO Containers**	CERTIFICATION	

A1.3.4.2.1	The ISO Containers must be Convention for Safe Containers (CSC) certified as per International Association of Classification Societies.		FIRST PRODUCTION ARTICLE
A1.3.4.2.1.1	If attachment points or modifications made to the ISO Containers are incorporated after receiving its initial build CSC certification, the original ISO Container manufacture must verify that the CSC is still valid and if not issue a new CSC certification and plate.		
A1.3.4.2.2	The ISO Containers must be affixed with the CSC plates.	INSPECTION	FIRST PRODUCTION ARTICLE
A1.3.4.3	**Identification and Marking of the ISO Containers**	INSPECTION	FIRST PRODUCTION ARTICLE
A1.3.4.3.1	A DND identification plate made of metal must be attached to each ISO Container and one of the personnel doors IAW D-02-002-001/SG-001.		
A1.3.4.3.2	IAW ISO 6346, the BIC (consisting of the DND Owner Code (CFCU), serial number and check digit) must be placed in the preferred horizontal format on the container as per the size and locations outlined in ISO 6346.		
A1.3.4.3.3	Each ISO Container must also have its new ISO Alphanumeric Identification Number stenciled/decaled in the vertical format on the inside of the curb side corner panel near the personnel door.		
A1.3.4.3.4	All exterior ISO identification markings must be stenciled/decaled on each ISO Container in a contrasting colour.		
A1.3.4.3.5	In order for DND to create the ISO Identification Numbers, the Contractor must provide:		
A1.3.4.3.5.1	Manufacturer serial number;		
A1.3.4.3.5.2	Manufacturer date;		
A1.3.4.3.5.3	Copies of the CSC certification, and	INSPECTION	

A1.3.4.3.5.4 Drawing(s) of the ISO Containers, with all interior attachment points and racks shown.		FIRST PRODUCTION ARTICLE
A1.3.4.3.6 ISO Identification Numbers will be assigned and issued by DND.		
A1.3.5 **Noise Emissions**	TEST	FIRST PRODUCTION ARTICLE
A1.3.5.1 The audible noise level generated by the WTU equipment must not exceed 87 dB (A) IAW the steady noise level permitted for a full eight-hour work shift as per the Occupational Exposure Limits in Canada (Federal) criterion.		
A1.3.5.2 The audible noise level generated by the WTS, while operating, must not exceed 70 dB (A) at any location seven (7) m away from the center of the noise source.		
A1.4 **Functionality**		
A1.4.1 **Performance Characteristics**		
A1.4.1.1 The WTS in its main configuration must be capable of purifying a wide range of source water from fresh and seawater sources composed of high levels of calcium, magnesium, bicarbonate, carbonate, minerals, H2SO4 acid, HCl, CO2, hydrogen ion, sulphate, chloride, nitrate, fluoride, sodium, silica, iron, aluminum, oxygen, hydrogen sulphide, dissolved solids and suspended solids, while meeting Health Canada's Standards and Guidelines for Canadian Drinking Water Quality.		
A1.4.1.2 **Water Production**		
A1.4.1.2.1 Source Water Parameters	ANALYSIS	FIRST PRODUCTION ARTICLE
A1.4.1.2.1.1 The WTS must derive purified water from water sources with the following parameters across the climatic conditions outlined in A1.5.2:	ANALYSIS	FIRST PRODUCTION ARTICLE

A1.4.1.2.1.2	The WTS must be capable of purifying a water source containing no less than 45 000 ppm TDS.	ANALYSIS	FIRST PRODUCTION ARTICLE
A1.4.1.2.1.3	The WTS must be capable of purifying a water source with an NTU of no less than 200.		
A1.4.1.2.1.4	The WTS must be capable of purifying water source with a free chlorine level of no less than 3 ppm.		
A1.4.1.2.1.5	The WTS must be capable of purifying a water source with a temperature range of 4ºC to 40ºC.		
A1.4.1.2.1.6	The WTS must be capable of purifying a water source with a PH range of 5.5 to 8.3.		
A1.4.1.2.1.7	The WTS must be capable of purifying a water source with a hardness of no less 200 mg/Litre		
A1.4.1.2.1.8	The WTS must be capable of purifying a water source with a level of Dissolve Organic Carbon (DOC) of no less than 20 mg/Litre		
A1.4.1.3	**Water Quality Challenges**	TEST	FIRST PRODUCTION ARTICLE
A1.4.1.3.1	The WTS must pass the water quality test outlined in Appendix A5.0 to ANNEX A1.		
A1.4.1.3.2	The WTS must purified water from the specific source outlined in Mission profile Functionality test # 1 and #2, para 6.2.2.7 and 6.2.2.8, and meet water quality standard outlined para. A1.4.1.5.	TEST	FIRST PRODUCTION ARTICLE
A1.4.1.4	**Production Rates**		
A1.4.1.4.1	The WTS must produce purified water at the following production rates across the climatic conditions outlined in A1.5.1:		

Water Source	Output Production	
	Litres/hour	Litres/day see note
Fresh Water	1,250	25,000
Sea Water	625	12,500

Note: A day is defined as twenty (20) hours of consecutive operation in the twenty-four (24) hour period.

A1.4.1.4.2	The WTS must meet the output quantities in A1.4.1.3.1 when its normal operating plane is at an angle of 10° in any direction from the horizontal.		
A1.4.1.4.3	The WTS must meet the output quantities in A1.4.1.3.1 when the WTS is located at sea level through to 2,000 m in elevation above sea level.		
A1.4.1.5	**Drinking Water Quality**		
A1.4.1.5.1	Water purified and treated by the WTS must meet the water quality requirements outlined in the Health Canada Guidelines for Canadian Drinking Water Quality (see the References – 2020 Guideline Technical Document and 2020 Summary Tables).	CERTIFICATION	FIRST PRODUCTION ARTICLE
A1.4.2	**Mobility**	TEST	FIRST PRODUCTION ARTICLE
A1.4.2.1	The WTS in primary mode of operation must achieve the Road and Cross Country test describe in ANNEX A1 para 6.2.2.6 to 6.2.2.11 without surpassing operator fault-finding and maintenance describe in ANNEX A1 para 6.2.2.9.		
A1.4.2.2	The WTS in primary mode of operation must pass the Static Rollover test describe in ANNEX A1 para 6.2.2.4		
A1.4.2.3	The WTS in its primary configuration must negotiate turns while being towed at posted speed limits on all Canadian highways (up to 110 km/h), without overturning, and while remaining stable at all times.	CERTIFICATION	FIRST PRODUCTION ARTICLE

A1.4.2.3.1	The Dynamic Rollover Threshold must be defined by mathematical analysis and presented at CDR.	CERTIFICATION	FIRST PRODUCTION ARTICLE
A1.4.2.4	The WTS in its primary configuration must be pulled or backed through light vegetation without damage to exterior components.		
A1.4.2.4.1	Light vegetation is defined as small trees/brush with a stem diameter of 25 mm and 1.5 m in height.		
A1.4.2.5	The angle of departure of the WTS in the primary mode of employment must be 18° with the angle measured as per SAE J1100 dimension A106-2. Note that the Rear Impact Guard may be retracted to meet this requirement.	ANALYSIS	FIRST PRODUCTION ARTICLE
A1.4.2.6	The WTS in the primary mode of employment must ford a water obstacle to a depth of 750 mm without preparation IAW with STANAG 2805 ED 5.	TEST	FIRST PRODUCTION ARTICLE
A1.5 Environmental and Climatic Characteristics			
A1.5.1	**Environmental/Climatic Requirements**		
A1.5.1.1	The WTS must meet all performance requirements in this specification, without physical damage or degradation to the WTS and sub-systems, during and after exposure to any combination of the meteorological and induced environmental conditions and factors identified in this specification.		
A1.5.2	**Climatic Conditions**		
A1.5.2.1	The WTS must be stored in all climatic conditions and factors associated with climatic categories A1, A2, A3, B1, B2, B3, C0, C1, and C2 IAW AECTP 230, Edition 1, Leaflets 2311/1 through 2311/3 and STANAG 2895, Edition 1, Annex C with the exception of climatic category C2, where the induced temperature is modified from -46°C to -40°C.	CERTIFICATION	FIRST PRODUCTION ARTICLE

A1.5.2.2	The WTS must be towed, be on stand-by, and be operable in all climatic conditions and factors associated with A1, A2, A3, B1, B2, B3, C0, C1, and C2 climatic categories IAW AECTP 230, Edition 1, Leaflets 2311/1 through 2311/3 and STANAG 2895, Edition 1, Annex C with the exception of climatic category C2, where the induced temperature is modified from -46°C to -40°C.	CERTIFICATION	FIRST PRODUCTION ARTICLE
A1.5.2.3	The WTS must operate in relative humidity ranging from 5% to 100%.	CERTIFICATION	FIRST PRODUCTION ARTICLE
A1.5.3	**Environmental Conditions**		
A1.5.3.1	The WTS must operate in heavy rain up to 20 mm/h and rain driven by wind gusts up to eighty (80) km/h over a period of no less than three (3) hours.	CERTIFICATION	FIRST PRODUCTION ARTICLE
A1.5.3.2	The WTS must operate in blowing sand and dust caused by wind gusts up to eighty (80) km/h over a period of no less than three (3) hours.		
A1.5.3.3	The WTS including ancillary equipment must be resistant to UV rays, fire, water, POL products, insects, animals, rot, mildew, and corrosion.		

A2.0 APPENDIX: CONTRACT DATA REQUIREMENTS LIST

A2.1 CDRL Item List

CDRL #	Title	DID #
WTS-PM-001	Project Management Plan	WTS-PM-001
WTS-PM-002	Contract Master Schedule	WTS-PM-002
WTS-PM-003	Contract Work Breakdown Structure	WTS-PM-003
WTS-PM-004	Contract Status Report	WTS-PM-004
WTS-PM-005	Meeting Agenda	WTS-PM-005
WTS-PM-006	Meeting Minutes	WTS-PM-006
WTS-SE-101	Systems Engineering Management Plan	WTS-SE-101
WTS-SE-102	Mandated System Review Package	WTS-SE-102
WTS-SE-103	Requirements Traceability Verification Matrix	WTS-SE-103
WTS-SE-104	Engineering Drawings & Associated Lists	WTS-SE-104
WTS-SE-105	Engineering Change Proposals	WTS-SE-105
WTS-SE-106	Configuration Status Accounting Report	WTS-SE-106
WTS-SE-107	Acceptance Test Plan and Procedures	WTS-SE-107
WTS-SE-108	Acceptance Test Reports	WTS-SE-108
WTS-ILS-201	Top Level Assembly Drawing	WTS-ILS-201
WTS-ILS-202	WTS Operator Manual	WTS-ILS-202
WTS-ILS-203	WTU Operator Quick Reference Card	WTS-ILS-203
WTS-ILS-204	WTS Maintenance Manual	WTS-ILS-204
WTS-ILS-205	WTS Permissive Repair Schedule and Standard Repair Times	WTS-ILS-205
WTS-ILS-206	WTS Illustrated Parts Manual	WTS-ILS-206
WTS-ILS-207	WTS Operator Training Package	WTS-ILS-207
WTS-ILS-208	WTU and ASU Technician Training Package	WTS-ILS-208
WTS-ILS-209	WTS Preservation, Storage and Reactivation Instructions	WTS-ILS-209
WTS-ILS-210	WTS Stowage, Shipping and Handling Instructions	WTS-ILS-210
WTS-ILS-211	WTS Data Summary	WTS-ILS-211
WTS-ILS-212	MEU, ASU and WSU Stowage Maps	WTS-ILS-212
WTS-ILS-213	WTU Process and Flow Diagrams	WTS-ILS-213
WTS-ILS-214	WSU Operation, Maintenance and Parts Handbook	WTS-ILS-214
WTS-ILS-215	Provisioning Parts Breakdown	WTS-ILS-215
WTS-ILS-216	Supplementary Provisioning Technical Documentation	WTS-ILS-216
WTS-ILS-217	Special Tools and Test Equipment	WTS-ILS-217
WTS-ILS-218	Equipment Delivery Status Report	WTS-ILS-218

WTS-ILS-219	Material Identification Data Set	WTS-ILS-219
WTS-ILS-220	Identification Plates	WTS-ILS-220
WTS-ILS-221	Controlled & Non-Controlled Goods List	WTS-ILS-221
WTS-ILS-222	Identification Labels for Storage and Shipment and Packaging Codes	WTS-ILS-222
WTS-ILS-223	List of Items to be Supported	WTS-ILS-223
WTS-ILS-224	Warranty Support Plan	WTS-ILS-224
WTS-ILS-225	Equipment Environmental Assessment	WTS-ILS-225

A2.2 CDRL Table Definitions

The following section defines the various blocks of information found on the CDRL forms:

BLOCK 1 – SYSTEM / ITEM
Provides the name of the System or Item for which the CDRL applies.

BLOCK 2 – ITEM NUMBER
The Item Number is a sequential three-digit number to uniquely identify the individual data item (CDRL number). Note that the 001-099 series is reserved to Project Management (PM) CDRLs, the 101-199 series is reserved to Systems Engineering (SE) CDRLs and the 201-299 series is reserved to Integrated Logistics Support (ILS) CDRLs.

BLOCK 3 - TITLE OR DESCRIPTION OF DATA
The title of the data item being referred to in this CDRL.

BLOCK 4 - AUTHORITY (DATA ITEM NUMBER)
Indicates the Data Item Description (DID) number to which this CDRL refers.

BLOCK 5 - CONTRACT REFERENCE
The specific paragraph number of the Contract Demand, Statement of Work, Request for Proposal, Specification, or other applicable document to assist in identifying the work effort associated with the data item.

BLOCK 6 - FREQUENCY
This block indicates the frequency of the delivered data. The following frequency codes are used:

ANNLY	Annually
ASGEN	As generated
ASREQ	As required
BI-MO	Every 2 months
BI-WK	Every 2 weeks
DAILY	Daily
MNTHY	Monthly
ONE/R	One time with revisions
OTIME	One time
QRTLY	Quarterly
R/ASR	Revisions as required
SEMIA	Semi-annually
WKLY	Weekly

BLOCK 7 – REQUIRING OFFICE
Identifies the technical office of primary interest responsible for defining the data requirement, reviewing, acceptance and approval of the data item, and ensuring the adequacy of the delivered data.

BLOCK 8 – SUBMISSION SCHEDULE

DATE OF 1ST SUBMISSION - The initial submission date or associated constraint for the 1st submission of the data item is indicated in this block using typical abbreviations as listed above under Block 11.

DATE OF SUBSEQUENT SUBMISSION / EVENT - The date(s) of subsequent submission(s) or associated constraint(s) of the data item is indicated in this block.

BLOCK 9 - DISTRIBUTION AND ADDRESSEES

Indicates the addressees and the respective number of copies (hard copies and soft copies separately), for either the draft or first submissions (Sub-Block “Draft”), and for the final or subsequent submissions (Sub-Block “Final”), for which the data item is required.

A2.3 CDRL – Project Management Plan

CONTRACT DATA REQUIREMENTS LIST		
1. SYSTEM / ITEM Water Treatment System		
2. ITEM NUMBER CDRL WTS-PM-001	3. TITLE OR DESCRIPTION OF DATA Project Management Plan (PMP)	4. AUTHORITY (Data Item Number) DID WTS-PM-001
5. CONTRACT REFERENCE SOW: **Para. 3.2.1 (pg. 17)** DID: **App. A3.3 (pg 160)**	6. FREQUENCY R/ASR	7. REQUIRING OFFICE DND PMO

8. SUBMISSION SCHEDULE

First Submission: The Contractor must provide a draft PMP for review at the Kick-off meeting.

Response Time: Comments on the draft PMP will be provided by Canada no later than 14 calendar days after receipt of the soft copy submission.

Subsequent Submission(s): The Contractor must provide a revised PMP, addressing Canada's comments, for review and possible acceptance no later than 14 calendar days after the receipt of Canada's comments.

Response Time: Comments or acceptance of the revised PMP will be provided by Canada no later than seven (7) calendar days after receipt of the soft copy submission.

9. DISTRIBUTION and ADDRESSEES

A. ADDRESSEE	B. COPIES			
	DRAFT		FINAL	
	Hard Copy	Soft Copy	Hard Copy	Soft Copy
DND TA		1		1

A2.4 CDRL – Contract Master Schedule

CONTRACT DATA REQUIREMENTS LIST		
1. SYSTEM / ITEM Water Treatment System		
2. ITEM NUMBER CDRL WTS-PM-002	3. TITLE OR DESCRIPTION OF DATA Contract Master Schedule (CMS)	4. AUTHORITY (Data Item Number) DID WTS-PM-002
5. CONTRACT REFERENCE SOW: **Para. 3.3.1 (pg. 17)** DID: **App. A3.4 (pg.162)**	6. FREQUENCY R/ASR	7. REQUIRING OFFICE DND PMO

8. SUBMISSION SCHEDULE

First Submission: The Contractor must provide a draft CMS for review at the Kick-off meeting.

Response Time: Comments on the draft CMS will be provided by Canada no later than 14 calendar days after receipt of the soft copy submission.

Subsequent Submission(s): The Contractor must provide a revised CMS, addressing Canada's comments, for review and possible acceptance no later than 14 calendar days after the receipt of Canada's comments.

Response Time: Comments or acceptance of the revised CMS will be provided by Canada no later than seven (7) calendar days after receipt of the soft copy submission.

Monthly Submissions (when changed): After acceptance by Canada, the Contractor must provide an updated CMS (when changed) on a monthly basis, aligned with the Contract Status Report, throughout the contract.

9. DISTRIBUTION and ADDRESSEES

A. ADDRESSEE	B. COPIES			
	DRAFT		FINAL	
	Hard Copy	Soft Copy	Hard Copy	Soft Copy
DND TA		1		1
PSPC CA				1
DND PA				1
DND ILSM				1

A2.5 CDRL – Contract Work Breakdown Structure

CONTRACT DATA REQUIREMENTS LIST		
1. SYSTEM / ITEM Water Treatment System		
2. ITEM NUMBER CDRL WTS-PM-003	3. TITLE OR DESCRIPTION OF DATA Contract Work Breakdown Structure (CWBS)	4. AUTHORITY (Data Item Number) DID WTS-PM-003
5. CONTRACT REFERENCE SOW: **Para. 3.4.1 (pg. 17)** DID: **App. A3.5 (pg. 164)**	6. FREQUENCY R/ASR	7. REQUIRING OFFICE DND PMO

8. SUBMISSION SCHEDULE

First Submission: The Contractor must provide a draft CWBS for review no later than 28 calendar days after the Kick-off Meeting.

Response Time: Comments on the draft CWBS will be provided by Canada no later than 14 calendar days after receipt of the soft copy submission.

Subsequent Submission(s): The Contractor must provide a revised CWBS, addressing Canada's comments, for review and possible acceptance no later than 14 calendar days after the receipt of Canada's comments.

Response Time: Comments or acceptance of the revised CWBS will be provided by Canada no later than seven (7) calendar days after receipt of the soft copy submission.

Monthly Submissions (when changed): After acceptance by Canada, the Contractor must provide an updated CWBS (when changed) on a monthly basis, aligned with the Contract Status Report, throughout the contract.

9. DISTRIBUTION and ADDRESSEES

A. ADDRESSEE	B. COPIES			
	DRAFT		FINAL	
	Hard Copy	Soft Copy	Hard Copy	Soft Copy
DND TA		1		1
PSPC CA				1
DND PA				1
DND ILSM		1		1

A2.6 CDRL – Contract Status Report

CONTRACT DATA REQUIREMENTS LIST		
1. SYSTEM / ITEM Water Treatment System		
2. ITEM NUMBER CDRL WTS-PM-004	3. TITLE OR DESCRIPTION OF DATA Contract Status Report (CSR)	4. AUTHORITY (Data Item Number) DID WTS-PM-004
5. CONTRACT REFERENCE SOW: **Para. 3.5.1 (pg. 18)** DID: **App. A3.6 (pg 165)**	6. FREQUENCY MNTHY	7. REQUIRING OFFICE DND PMO

8. SUBMISSION SCHEDULE

First Submission: The Contractor must provide a draft CSR for review no later than 28 calendar days after the Kick-off Meeting.

Response Time: Comments on the draft CSR will be provided by Canada no later than 14 calendar days after receipt of the soft copy submission.

Subsequent Submission(s): The Contractor must provide a revised CSR, addressing Canada's comments, for review and possible acceptance no later than seven (7) calendar days after the receipt of Canada's comments.

Response Time: Comments or acceptance of the revised CSR will be provided by Canada no later than seven (7) calendar days after receipt of the soft copy submission.

Monthly Submissions: After acceptance by Canada, the Contractor must provide a CSR on a monthly basis throughout the contract.

9. DISTRIBUTION and ADDRESSEES

A. ADDRESSEE	B. COPIES			
	DRAFT		FINAL	
	Hard Copy	Soft Copy	Hard Copy	Soft Copy
DND TA		1		1
PSPC CA				1
DND PA				1
DND ILSM				1

A2.7 CDRL – Meeting Agenda

CONTRACT DATA REQUIREMENTS LIST		
1. SYSTEM / ITEM Water Treatment System		
2. ITEM NUMBER CDRL WTS-PM-005	3. TITLE OR DESCRIPTION OF DATA Meeting Agenda	4. AUTHORITY (Data Item Number) DID WTS-PM-005
5. CONTRACT REFERENCE SOW: **Para. 3.6.6.1.1 (pg. 19)** DID: **App. A3.7 (pg.167)**	6. FREQUENCY ASREQ	7. REQUIRING OFFICE DND PMO

8. SUBMISSION SCHEDULE

First Submission: The Contractor must provide a draft Meeting Agenda for review no later than seven (7) calendar days prior to each meeting.

Response Time: Comments on the draft Meeting Agenda, and additions and deletions of discussion items, will be provided by Canada no later than seven (7) calendar days after receipt of the soft copy submission.

Subsequent Submission: The Contractor must provide a revised Meeting Agenda, addressing Canada's comments, as a soft copy, one (1) business day before the meeting, and in hard copy at the meeting.

9. DISTRIBUTION and ADDRESSEES

A. ADDRESSEE	B. COPIES			
	DRAFT		FINAL	
	Hard Copy	Soft Copy	Hard Copy	Soft Copy
PSPC CA		1		1
DND TA		1		1
DND PA		1		1

A2.8 CDRL – Meeting Minutes

CONTRACT DATA REQUIREMENTS LIST		
1. SYSTEM / ITEM Water Treatment System		
2. ITEM NUMBER CDRL WTS-PM-006	3. TITLE OR DESCRIPTION OF DATA Meeting Minutes	4. AUTHORITY (Data Item Number) DID WTS-PM-006
5. CONTRACT REFERENCE SOW: **Para. 3.6.6.1.1 (pg. 19)** DID: **App. A3.8 (pg. 168)**	6. FREQUENCY ASREQ	7. REQUIRING OFFICE DND PMO

8. SUBMISSION SCHEDULE

First Submission: The Contractor must provide draft Meeting Minutes for review no later than seven (7) calendar days following each meeting.

Response Time: Comments on the draft Meeting Minutes will be provided by Canada no later than seven (7) calendar days after receipt of the soft copy submission.

Subsequent Submission(s): The Contractor must provide revised Meeting Minutes, addressing Canada's comments, for review and possible acceptance no later than seven (7) calendar days after receipt of Canada's comments.

Response Time: Comments or acceptance of the revised Meeting Minutes will be provided by Canada no later than seven (7) calendar days after receipt of the soft copy submission.

9. DISTRIBUTION and ADDRESSEES

A. ADDRESSEE	B. COPIES			
	DRAFT		FINAL	
	Hard Copy	Soft Copy	Hard Copy	Soft Copy
PSPC CA		1		1
DND TA		1		1
DND PA		1		1

A2.9 CDRL – Systems Engineering Management Plan

CONTRACT DATA REQUIREMENTS LIST		
1. SYSTEM / ITEM Water Treatment System		
2. ITEM NUMBER CDRL WTS-SE-101	3. TITLE OR DESCRIPTION OF DATA Systems Engineering Management Plan (SEMP)	4. AUTHORITY (Data Item Number) DID WTS-SE-101
5. CONTRACT REFERENCE SOW: **Para. 4.2.2.1 (pg. 20)** DID: **App. A3.9 (pg. 169)**	6. FREQUENCY QRTLY	7. REQUIRING OFFICE DND PMO

8. SUBMISSION SCHEDULE

First Submission: The Contractor must provide a draft SEMP for review at Kick-off meeting.

Response Time: Comments on the draft SEMP will be provided by Canada no later than 14 calendar days after receipt of the soft copy submission.

Subsequent Submission(s): The Contractor must provide a revised SEMP, addressing Canada's comments, for review and possible acceptance no later than 14 calendar days after the receipt of Canada's comments.

Response Time: Comments or acceptance of the revised SEMP will be provided by Canada no later than seven (7) calendar days after receipt of the soft copy submission.

Quarterly Submissions: After acceptance by Canada, the Contractor must provide a SEMP on a quarterly basis throughout the remainder of the contract, after changes have occurred.

9. DISTRIBUTION and ADDRESSEES

A. ADDRESSEE	B. COPIES			
	DRAFT		FINAL	
	Hard Copy	Soft Copy	Hard Copy	Soft Copy
DND TA		1		1

A2.10 **CDRL – Mandated System Review Package**

CONTRACT DATA REQUIREMENTS LIST		
1. SYSTEM / ITEM Water Treatment System		
2. ITEM NUMBER CDRL WTS-SE-102	3. TITLE OR DESCRIPTION OF DATA Mandated System Review (MSR) Package	4. AUTHORITY (Data Item Number) DID WTS-SE-102
5. CONTRACT REFERENCE SOW: **Para. 4.2.4.4 (pg. 21)** DID: **App. A3.10 (pg. 174)**	6. FREQUENCY R/ASR	7. REQUIRING OFFICE DND PMO

8. SUBMISSION SCHEDULE

First Submission: The Contractor must provide a draft MSR Package for review no later than 28 calendar days prior to each MSR meeting.

Response Time: Comments on the draft MSR Package will be provided by Canada no later than 14 calendar days after receipt of the soft copy submission.

MSR Meeting Submission: The Contractor must provide a revised MSR Package, addressing Canada's comments, for presentation and discussion, at the MSR meeting.

Response Time: Comments or acceptance of the revised MSR Package will be provided by Canada no later than seven (7) calendar days after the MSR meeting has concluded.

Subsequent Submission(s): The Contractor must provide a revised MSR Package, addressing Canada's comments, for review and possible acceptance no later than seven (7) calendar days after the receipt of Canada's comments.

9. DISTRIBUTION and ADDRESSEES

A. ADDRESSEE	B. COPIES			
	DRAFT		FINAL	
	Hard Copy	Soft Copy	Hard Copy	Soft Copy
DND TA		1		1

A2.11 **CDRL – Requirements Traceability Verification Matrix**

CONTRACT DATA REQUIREMENTS LIST		
1. SYSTEM / ITEM Water Treatment System		
2. ITEM NUMBER CDRL WTS-SE-103	3. TITLE OR DESCRIPTION OF DATA Requirements Traceability Verification Matrix (RTVM)	4. AUTHORITY (Data Item Number) DID WTS-SE-103
5. CONTRACT REFERENCE SOW: **Para. 4.2.5.1 (pg. 22)** DID: **App. A3.11 (pg. 175)**	6. FREQUENCY R/ASR	7. REQUIRING OFFICE DND PMO

8. SUBMISSION SCHEDULE

First Submission: The Contractor must provide a draft RTVM for review no later than 21 calendar days prior to each MSR meeting that requires it.

Response Time: Comments or acceptance of the draft RTVM will be provided by Canada no later than 14 calendar days after receipt of the soft copy submission.

MSR Meeting Submission: The Contractor must provide a revised RTVM, addressing Canada's comments, for presentation and discussion at the MSR meeting.

Response Time: Comments or acceptance of the revised RTVM will be provided by Canada no later than seven (7) calendar days after the MSR meeting has concluded.

Subsequent Submission(s): The Contractor must provide a revised RTVM, addressing Canada's comments, for review and possible acceptance no later than seven (7) calendar days after the receipt of Canada's comments.

Final Submission: The Contractor must provide the final and complete RTVM once the Acceptance Test Reports are accepted after completion of the Acceptance Verification.

9. DISTRIBUTION and ADDRESSEES

A. ADDRESSEE	B. COPIES			
	DRAFT		FINAL	
	Hard Copy	Soft Copy	Hard Copy	Soft Copy
DND TA		1		1

A2.12 CDRL – Engineering Drawings and Associated Lists

CONTRACT DATA REQUIREMENTS LIST		
1. SYSTEM / ITEM Water Treatment System		
2. ITEM NUMBER CDRL WTS-SE-104	3. TITLE OR DESCRIPTION OF DATA Engineering Drawings and Associated Lists	4. AUTHORITY (Data Item Number) DID WTS-SE-104
5. CONTRACT REFERENCE SOW: **Para. 4.3.3.1 (pg. 25)** DID: **App. A3.12 (pg. 177)**	6. FREQUENCY R/ASR	7. REQUIRING OFFICE DND PMO

8. SUBMISSION SCHEDULE

First Submission: The Contractor must provide a draft Engineering Drawings and Associated Lists (Level 1 – Conceptual and Developmental Design) for review no later than 21 calendar days prior to the CDR meeting, to confirm the maturity of the system design.

Response Time: Comments on the draft Engineering Drawings and Associated Lists will be provided by Canada no later than 14 calendar days after receipt of the soft copy submission.

CDR Meeting Submission: The Contractor must provide a revised Engineering Drawings and Associated Lists, addressing Canada's comments, for presentation and discussion at the CDR meeting.

Response Time: Comments or acceptance of the revised Engineering Drawings and Associated Lists will be provided by Canada no later than seven (7) calendar days after the CDR meeting has concluded.

Subsequent Submission: The Contractor must provide a final Engineering Drawings and Associated Lists (Level 2 – Production Prototype and Limited Production), for review no later than 21 calendar days prior to the PCA meeting.

Response Time: Comments on the final Engineering Drawings and Associated Lists will be provided by Canada no later than 14 calendar days after receipt of the soft copy submission.

PCA Meeting Submission: The Contractor must provide a revised final Engineering Drawings and Associated Lists, addressing Canada's comments, for discussion and use during the PCA meeting.

Response Time: Comments or acceptance of the revised final Engineering Drawings and Associated Lists will be provided by Canada no later than seven (7) calendar days after the PCA meeting has concluded.

9. DISTRIBUTION and ADDRESSEES

A. ADDRESSEE	B. COPIES			
	DRAFT		FINAL	
	Hard Copy	Soft Copy	Hard Copy	Soft Copy
DND TA		1		1

A2.13 **CDRL – Engineering Change Proposal**

CONTRACT DATA REQUIREMENTS LIST		
1. SYSTEM / ITEM Water Treatment System		
2. ITEM NUMBER CDRL WTS-SE-105	3. TITLE OR DESCRIPTION OF DATA Engineering Change Proposal (ECP)	4. AUTHORITY (Data Item Number) DID WTS-SE-105
5. CONTRACT REFERENCE SOW: **Para. 5.4.2 (pg 27)** DID: **App. A3.13 (pg. 178)**	6. FREQUENCY ASGEN	7. REQUIRING OFFICE DND PMO

8. SUBMISSION SCHEDULE

First Submission: The Contractor must provide a draft ECP for review as required.

Response Time: Comments on the draft ECP will be provided by Canada no later than 14 calendar days after receipt of the soft copy submission.

Subsequent Submission(s): The Contractor must provide a revised ECP, addressing Canada's comments, for review and possible acceptance no later than 14 calendar days after the receipt of Canada's comments.

Response Time: Comments or acceptance of the revised ECP will be provided by Canada no later than seven (7) calendar days after receipt of the soft copy submission.

9. DISTRIBUTION and ADDRESSEES

A. ADDRESSEE	B. COPIES			
	DRAFT		FINAL	
	Hard Copy	Soft Copy	Hard Copy	Soft Copy
DND TA		1		1

A2.14 **CDRL – Configuration Status Accounting Report**

CONTRACT DATA REQUIREMENTS LIST		
1. SYSTEM / ITEM Water Treatment System		
2. ITEM NUMBER CDRL WTS-SE-106	3. TITLE OR DESCRIPTION OF DATA Configuration Status Accounting (CSA) Report	4. AUTHORITY (Data Item Number) DID WTS-SE-106
5. CONTRACT REFERENCE SOW: **Para. 5.5.2 (pg 28)** DID: **App. A3.14 (pg. 185)**	6. FREQUENCY BI-MO	7. REQUIRING OFFICE DND PMO

8. SUBMISSION SCHEDULE

First Submission: The Contractor must provide a draft CSA Report for review no later than 28 calendar days after the CDR meeting has concluded.

Response Time: Comments on the draft CSA Report will be provided by Canada no later than 14 calendar days after receipt of the soft copy submission.

Subsequent Submission(s): The Contractor must provide a revised CSA Report, addressing Canada's comments, for review and possible acceptance no later than 14 calendar days after the receipt of Canada's comments.

Response Time: Comments or acceptance of the revised CSA Report will be provided by Canada no later than seven (7) calendar days after receipt of the soft copy submission.

Bi-Monthly Submissions: After acceptance by Canada, the Contractor must provide a CSA Report on a bi-monthly basis throughout the remainder of the contract, after changes have occurred.

9. DISTRIBUTION and ADDRESSEES

A. ADDRESSEE	B. COPIES			
	DRAFT		FINAL	
	Hard Copy	Soft Copy	Hard Copy	Soft Copy
DND TA		1		1

A2.15 **CDRL – Acceptance Test Plan and Procedures**

CONTRACT DATA REQUIREMENTS LIST		
1. SYSTEM / ITEM Water Treatment System		
2. ITEM NUMBER CDRL WTS-SE-107	3. TITLE OR DESCRIPTION OF DATA Acceptance Test Plan and Procedures (ATP&P)	4. AUTHORITY (Data Item Number) DID WTS-SE-107
5. CONTRACT REFERENCE SOW:**Para. 6.1.1.2 (pg.31)** DID: **App. A3.15 (pg. 187)**	6. FREQUENCY R/ASR	7. REQUIRING OFFICE DND PMO

8. SUBMISSION SCHEDULE

First Submission: The Contractor must provide a draft ATP&P for review no later than 28 calendar days prior to the TRR meeting.

Response Time: Comments on the draft ATP&P will be provided by Canada no later than 14 calendar days after receipt of the soft copy submission.

TRR Meeting Submission: The Contractor must provide a revised ATP&P, addressing Canada's comments, for presentation and discussion, at the TRR meeting.

Response Time: Comments or acceptance of the revised ATP&P will be provided by Canada no later than seven (7) calendar days after the TRR meeting has concluded.

Subsequent Submission(s): The Contractor must provide a revised ATP&P, addressing Canada's comments, for review and possible acceptance no later than seven (7) calendar days after the receipt of Canada's comments.

9. DISTRIBUTION and ADDRESSEES

A. ADDRESSEE	B. COPIES			
	DRAFT		FINAL	
	Hard Copy	Soft Copy	Hard Copy	Soft Copy
DND TA		1		1

A2.16 **CDRL – Acceptance Test Reports**

CONTRACT DATA REQUIREMENTS LIST		
1. SYSTEM / ITEM Water Treatment System		
2. ITEM NUMBER CDRL WTS-SE-108	3. TITLE OR DESCRIPTION OF DATA Acceptance Test Reports (ATRs)	4. AUTHORITY (Data Item Number) DID WTS-SE-108
5. CONTRACT REFERENCE SOW: **Para.6.2.1.4(pg. 34)** DID: **App. A3.16 (pg. 190)**	6. FREQUENCY R/ASR	7. REQUIRING OFFICE DND PMO

8. SUBMISSION SCHEDULE

First Submission: The Contractor must provide draft ATRs for review no later than seven (7) calendar days after Acceptance Verification completion.

Response Time: Comments on the ATRs will be provided by Canada no later than 14 calendar days after receipt of the soft copy submission.

Subsequent Submission(s): The Contractor must provide revised ATRs, addressing Canada's comments, for review and possible acceptance no later than 14 calendar days after the receipt of Canada's comments.

Response Time: Comments or acceptance of the revised ATRs will be provided by Canada no later than 14 calendar days after receipt of the soft copy submission.

9. DISTRIBUTION and ADDRESSEES

A. ADDRESSEE	B. COPIES			
	DRAFT		FINAL	
	Hard Copy	Soft Copy	Hard Copy	Soft Copy
DND TA		1		1

A2.17 **CDRL – Top Level Assembly Drawing**

CONTRACT DATA REQUIREMENTS LIST		
1. SYSTEM / ITEM Water Treatment System		
2. ITEM NUMBER CDRL WTS-ILS-201	3. TITLE OR DESCRIPTION OF DATA Top Level Assembly Drawing	4. AUTHORITY (Data Item Number) DID WTS-ILS-201
5. CONTRACT REFERENCE SOW: **Para. 3.6.2.2 (pg. 18)** DID: **App. A3.17 (pg.191)**	6. FREQUENCY ONE/R	7. REQUIRING OFFICE DND ILS Manager

8. SUBMISSION SCHEDULE

First Submission: The Contractor must provide a draft TLAD for review by Canada during the Kick-Off Meeting.

Response Time: Comments on the draft TLAD will be provided by Canada no later than seven (7) calendar days after receipt of the hard and soft copy submission.

Subsequent Submission(s): The Contractor must provide a revised TLAD, addressing Canada's comments, for review and possible acceptance no later than seven (7) calendar days after the receipt of Canada's comments.

Response Time: Comments or acceptance of the revised TLAD will be provided by Canada no later than seven (7) calendar days after receipt of the hard and soft copy submission.

9. DISTRIBUTION and ADDRESSEES

A. ADDRESSEE	B. COPIES			
	DRAFT		FINAL	
	Hard Copy	Soft Copy	Hard Copy	Soft Copy
DND ILSM	1	1	1	1

A2.18 **CDRL – WTS Operator Manual**

CONTRACT DATA REQUIREMENTS LIST		
1. SYSTEM / ITEM Water Treatment System		
2. ITEM NUMBER CDRL WTS-ILS-202	3. TITLE OR DESCRIPTION OF DATA WTS Operator Manual	4. AUTHORITY (Data Item Number) DID WTS-ILS-202
5. CONTRACT REFERENCE SOW: **Para. 8.3.1.1.1 (pg. 44)** DID: **App. A3.18 (pg. 192)**	6. FREQUENCY ONE/R	7. REQUIRING OFFICE DND ILS Manager

8. SUBMISSION SCHEDULE

First Submission (English): The Contractor must provide a draft hardcopy English WTS Operator Manual for review by Canada at the onset of First Production Article Verification (FPAV), with a softcopy by email.

Response Time: Comments on the draft English WTS Operator Manual will be provided by Canada no later than 56 days after the conclusion of the FPAV.

Subsequent Submission(s) (English): The Contractor must provide a revised English WTS Operator Manual, addressing Canada's comments, for review and possible acceptance no later than 63 days after Design Acceptance.

Response Time: Comments or acceptance of the revised English WTS Operator Manual will be provided by Canada no later than 28 days after receipt of the hard copy submission.

First Submission (Bilingual): The Contractor must provide a draft Bilingual WTS Operator Manual for review by Canada no later than 105 days after the acceptance of the English WTS Operator Manual.

Response Time: Comments on the draft Bilingual WTS Operator Manual will be provided by Canada no later than 42 days after receipt of the hard copy submission.

Subsequent Submission(s) (Bilingual): The Contractor must provide a revised Bilingual WTS Operator Manual, addressing Canada's comments, for review and possible acceptance no later than 28 days after the receipt of Canada's comments.

Response Time: Comments or acceptance of the revised Bilingual WTS Operator Manual will be provided by Canada no later than 21 days after receipt of the hard copy submission.

9. DISTRIBUTION and ADDRESSEES

A. ADDRESSEE	B. COPIES			
	DRAFT		FINAL	
	Hard Copy	Soft Copy	Hard Copy	Soft Copy
DND ILSM	1	1	1	1
Issued with each WTS			1	1

A2.19 **CDRL – WTU Operator Quick Reference Card**

CONTRACT DATA REQUIREMENTS LIST		
1. SYSTEM / ITEM Water Treatment System		
2. ITEM NUMBER CDRL WTS-ILS-203	3. TITLE OR DESCRIPTION OF DATA WTU Operator Quick Reference Card	4. AUTHORITY (Data Item Number) DID WTS-ILS-203
5. CONTRACT REFERENCE SOW **Para. 8.3.1.2.1 (pg. 44)** DID: **App. A3.19 (pg. 194)**	6. FREQUENCY ONE/R	7. REQUIRING OFFICE DND ILS Manager

8. SUBMISSION SCHEDULE

First Submission (English): The Contractor must provide a draft English WTU Operator Quick Reference Card for review by Canada at the same time as the submission of the second version of the English WTS Operator Manual.

Response Time: Comments on the draft English WTU Operator Quick Reference Card will be provided by Canada at the same time as the comments for the second revision of the English WTS Operator Manual.

Subsequent Submission(s) English: The Contractor must provide a revised English WTU Operator Quick Reference Card, addressing Canada's comments, for review and possible acceptance no later than 28 days after the receipt of Canada's comments.

Response Time: Comments or acceptance of the revised English WTU Operator Quick Reference Card will be provided by Canada no later than 21 calendar days after receipt of the hard copy submission.

First Submission (Bilingual): The Contractor must provide a draft Bilingual WTU Operator Quick Reference Card for review by Canada at the same time as the submission of the Bilingual WTS Operator Manual.

Response Time: Comments on the draft Bilingual WTU Operator Quick Reference Card will be provided by Canada at the same time as those for the first draft Bilingual WTS Operator Manual.

Subsequent Submission(s) (Bilingual): The Contractor must provide a revised Bilingual WTU Operator Quick Reference Card, addressing Canada's comments, for review and possible acceptance no later than 21 calendar days after the receipt of Canada's comments, or at any time modifications to the WTS Operator Manual also affect the WTU Operator Quick Reference Card.

Response Time: Comments or acceptance of the revised Bilingual WTU Operator Quick Reference Card will be provided by Canada no later than 21 calendar days after receipt of the hard copy submission.

9. DISTRIBUTION and ADDRESSEES

A. ADDRESSEE	B. COPIES			
	DRAFT		FINAL	
	Hard Copy	Soft Copy	Hard Copy	Soft Copy
DND ILSM	1	1	1	1
Issued with each WTS			1	1

A2.20 **CDRL – WTS Maintenance Manual**

CONTRACT DATA REQUIREMENTS LIST		
1. SYSTEM / ITEM Water Treatment System		
2. ITEM NUMBER CDRL WTS-ILS-204	3. TITLE OR DESCRIPTION OF DATA WTS Maintenance Manual	4. AUTHORITY (Data Item Number) DID WTS-ILS-204
5. CONTRACT REFERENCE SOW **Para. 8.3.1.3.1 (pg. 44)** DID: **App. A3.20 (pg. 196)**	6. FREQUENCY ONE/R	7. REQUIRING OFFICE DND ILS Manager

8. SUBMISSION SCHEDULE

First Submission (English): The Contractor must provide a draft English WTS Maintenance Manual for review by Canada no later than 126 days following Design Acceptance.

Response Time: Comments on the draft English WTS Maintenance Manual will be provided by Canada no later than 70 days after receipt of the hard copy submission.

Subsequent Submission(s) (English): The Contractor must provide a revised English WTS Maintenance Manual, addressing Canada's comments, for review and possible acceptance no later than 70 days after the receipt of Canada's comments.

Response Time: Comments or acceptance of the revised English WTS Maintenance Manual will be provided by Canada no later than 35 days after receipt of the hard copy submission.

First Submission (Bilingual): The Contractor must provide a draft Bilingual WTS Maintenance Manual for review by Canada no later than 102 days after the acceptance of the English WTS Maintenance Manual.

Response Time: Comments on the draft Bilingual WTS Maintenance Manual will be provided by Canada no later than 42 days after receipt of the hard copy submission.

Subsequent Submission(s) (Bilingual): The Contractor must provide a revised Bilingual WTS Maintenance Manual, addressing Canada's comments, for review and possible acceptance no later than 28 days after the receipt of Canada's comments.

Response Time: Comments or acceptance of the revised Bilingual WTS Maintenance Manual will be provided by Canada no later than 21 days after receipt of the hard copy submission.

9. DISTRIBUTION and ADDRESSEES

A. ADDRESSEE	B. COPIES			
	DRAFT		FINAL	
	Hard Copy	Soft Copy	Hard Copy	Soft Copy
DND ILSM	1	1	1	1
Issued with each WTS			1	1

A2.21 CDRL – WTS Permissive Repair Schedule and Standard Repair Times

CONTRACT DATA REQUIREMENTS LIST		
1. SYSTEM / ITEM Water Treatment System		
2. ITEM NUMBER CDRL WTS-ILS-205	3. TITLE OR DESCRIPTION OF DATA WTS Permissive Repair Schedule and Standard Repair Times	4. AUTHORITY (Data Item Number) DID WTS-ILS-205
5. CONTRACT REFERENCE SOW **Para. 8.3.1.4.1 (pg. 44)** DID: **App. A3.21 (pg. 198)**	6. FREQUENCY ONE/R	7. REQUIRING OFFICE DND ILS Manager

8. SUBMISSION SCHEDULE

First Submission (English): The Contractor must provide a draft English WTS Permissive Repair Schedule and Standard Repair Times for review by Canada no later than 28 days following the acceptance of the English WTS Maintenance Manual.

Response Time: Comments on the draft English WTS Permissive Repair Schedule and Standard Repair Times will be provided by Canada no later than 21 days after receipt of the hard copy submission.

Subsequent Submission(s) English: The Contractor must provide a revised English WTS Permissive Repair Schedule and Standard Repair Times, addressing Canada's comments, for review and possible acceptance no later than 14 days after the receipt of Canada's comments.

Response Time: Comments or acceptance of the revised English WTS Permissive Repair Schedule and Standard Repair Times will be provided by Canada no later than 14 days after receipt of the hard copy submission.

First Submission (Bilingual): The Contractor must provide a draft Bilingual WTS Permissive Repair Schedule and Standard Repair Times for review by Canada no later than 28 days following the acceptance of the Bilingual WTS Maintenance Manual.

Response Time: Comments on the draft Bilingual WTS Permissive Repair Schedule and Standard Repair Times will be provided by Canada no later than 21 days after receipt of the hard copy submission.

Subsequent Submission(s) (Bilingual): The Contractor must provide a revised Bilingual WTS Permissive Repair Schedule and Standard Repair Times, addressing Canada's comments, for review and possible acceptance no later than 14 days after the receipt of Canada's comments, or at any time modifications are required to the WTS Permissive Repair Schedule and Standard Repair Times due to changes made to the WTS Maintenance Manual that also affect the former.

Response Time: Comments or acceptance of the revised Bilingual WTS Permissive Repair Schedule and Standard Repair Times will be provided by Canada no later than 14 calendar days after receipt of the hard copy submission.

9. DISTRIBUTION and ADDRESSEES

A. ADDRESSEE	B. COPIES			
	DRAFT		FINAL	
	Hard Copy	Soft Copy	Hard Copy	Soft Copy
DND ILSM	1	1	1	1

A2.22 **CDRL – WTS Illustrated Parts Manual**

CONTRACT DATA REQUIREMENTS LIST		
1. SYSTEM / ITEM Water Treatment System		
2. ITEM NUMBER CDRL WTS-ILS-206	3. TITLE OR DESCRIPTION OF DATA WTS Illustrated Parts Manual	4. AUTHORITY (Data Item Number) DID WTS-ILS-206
5. CONTRACT REFERENCE SOW **Para. 8.3.1.5.1 (pg. 45)** DID: **App. A3.22 (pg. 199)**	6. FREQUENCY ONE/R	7. REQUIRING OFFICE DND ILS Manager

8. SUBMISSION SCHEDULE

First Submission: The Contractor must provide a draft WTS Illustrated Parts Manual for review by Canada no later than 126 days following Design Acceptance.

Response Time: Comments on the draft WTS Illustrated Parts Manual will be provided by Canada no later than 91 days after receipt of the hard copy submission.

Subsequent Submission(s): The Contractor must provide a revised WTS Illustrated Parts Manual, addressing Canada's comments, for review and possible acceptance no later than 84 calendar days after the receipt of Canada's comments.

Resonse Time: Comments or acceptance of the revised WTS Illustrated Parts Manual will be provided by Canada no later than 42 calendar days after receipt of the hard copy submission.

Note: The Contractor must provide a subsequent submission of the WTS Illustrated Parts Manual if additional revisions or additions are required after completion of the IPC.

9. DISTRIBUTION and ADDRESSEES

A. ADDRESSEE	B. COPIES			
	DRAFT		FINAL	
	Hard Copy	Soft Copy	Hard Copy	Soft Copy
DND ILSM	1	1	3	1

A2.23 CDRL – WTS Operator Training Package

CONTRACT DATA REQUIREMENTS LIST

1. SYSTEM / ITEM
Water Treatment System

2. ITEM NUMBER	3. TITLE OR DESCRIPTION OF DATA	4. AUTHORITY (Data Item Number)
CDRL WTS-ILS-207	WTS Operator Training Package	DID WTS-ILS-207
5. CONTRACT REFERENCE	**6. FREQUENCY**	**7. REQUIRING OFFICE**
SOW: **Para. 8.3.1.6.1 (pg. 45)** DID: **App. A3.23 (pg. 201)**	ONE/R	DND ILS Manager

8. SUBMISSION SCHEDULE

First Submission (English): The Contractor must provide a draft English WTS Operator Training Package for review by Canada at the same time as the submission of the second version of the English WTS Operator Manual.

Response Time: Comments on the draft English WTS Operator Training Package will be provided by Canada no later than 49 days after receipt of the hard copy submission.

Subsequent Submission(s) (English): The Contractor must provide a revised English WTS Operator Training Package, addressing Canada's comments, for review and possible acceptance no later than 35 days after the receipt of Canada's comments.

Response Time: Comments or acceptance of the revised English WTS Operator Training Package will be provided by Canada no later than 28 calendar days after receipt of the hard copy submission.

First Submission (Bilingual): The Contractor must provide a draft Bilingual WTS Operator Training Package for review by Canada no later than 70 days after the acceptance of the English WTS Operator Training Package.

Response Time: Comments on the draft Bilingual WTS Operator Training Package will be provided by Canada no later than 35 days after receipt of both the second version of the Bilingual WTS Operator Manual hard copy submission and the first version of the Bilingual WTS Operator Training Package hard copy submission.

Subsequent Submission(s) (Bilingual): The Contractor must provide a revised Bilingual WTS Operator Training Package, addressing Canada's comments, for review and possible acceptance no later than 28 calendar days after the receipt of Canada's comments, or at any time changes made to the WTS Operator Manual affect the former.

Response Time: Comments or acceptance of the revised Bilingual WTS Operator Training Package will be provided by Canada no later than 14 calendar days after receipt of the hard copy submission.

9. DISTRIBUTION and ADDRESSEES

A. ADDRESS	B. COPIES			
	DRAFT		FINAL	
	Hard Copy	Soft Copy	Hard Copy	Soft Copy
DND ILSM	1	1	1	1
Issued to Students at the Training Session(s)			1 – Student Handout only	1 – CD of the WTS Operator Training Package

A2.24 CDRL – WTU and ASU Technician Training Package

CONTRACT DATA REQUIREMENTS LIST

1. SYSTEM / ITEM
Water Treatment System

2. ITEM NUMBER	3. TITLE OR DESCRIPTION OF DATA	4. AUTHORITY (Data Item Number)
CDRL WTS-ILS-208	WTU and ASU Technician Training Package	DID WTS-ILS-208
5. CONTRACT REFERENCE SOW: **Para. 8.3.1.7.1 (pg. 45)** DID: **App. A3.24 (pg. 203)**	6. FREQUENCY ONE/R	7. REQUIRING OFFICE DND ILS Manager

8. SUBMISSION SCHEDULE

First Submission (English): The Contractor must provide a draft English WTU and ASU Technician Training Package for review by Canada at the same time as the submission of the second version of the English WTS Maintenance Manual.

Response Time: Comments on the draft English WTU and ASU Technician Training Package will be provided by Canada no later than 49 days after receipt of the hard copy submission.

Subsequent Submission(s) (English): The Contractor must provide a revised English WTU and ASU Technician Training Package, addressing Canada's comments, for review and possible acceptance no later than 35 days after the receipt of Canada's comments.

Response Time: Comments or acceptance of the revised English WTU and ASU Technician Training Package will be provided by Canada no later than 28 calendar days after receipt of the hard copy submission.

First Submission (Bilingual): The Contractor must provide a draft Bilingual WTU and ASU Technician Training Package for review by Canada no later than 70 days after the acceptance of the English WTU and ASU Technician Training Package.

Response Time: Comments on the draft Bilingual WTU and ASU Technician Training Package will be provided by Canada no later than 35 days after receipt of both the second version of the Bilingual WTS Maintenance Manual hard copy submission and the second version of the Bilingual WTU and ASU Technician Training Package hard copy submission.

Subsequent Submission(s) (Bilingual): The Contractor must provide a revised Bilingual WTU and ASU Technician Training Package, addressing Canada's comments, for review and possible acceptance no later than 28 calendar days after the receipt of Canada's comments, or at any time modifications are required to the WTU and ASU Technician Training Package due to changes made to the WTS Maintenance Manual that also affect the former.

Response Time: Comments or acceptance of the revised Bilingual WTU and ASU Technician Training Package will be provided by Canada no later than 14 calendar days after receipt of the hard copy submission.

9. DISTRIBUTION and ADDRESSEES

A. ADDRESS	B. COPIES			
	DRAFT		FINAL	
	Hard Copy	Soft Copy	Hard Copy	Soft Copy
DND ILSM	1	1	1	1
Issued to Students at the Training Session(s)			1 – Student Handout only	1 – CD of the WTU and ASU Technician

A2.25 CDRL – WTS Preservation, Storage and Reactivation Instructions

CONTRACT DATA REQUIREMENTS LIST		
1. SYSTEM / ITEM Water Treatment System		
2. ITEM NUMBER CDRL WTS-ILS-209	3. TITLE OR DESCRIPTION OF DATA WTS Preservation, Storage and Reactivation Instructions	4. AUTHORITY (Data Item Number) DID WTS-ILS-209
5. CONTRACT REFERENCE SOW: **Para. 8.3.1.8.1 (pg. 45)** DID: **App. A3.25 (pg. 205)**	6. FREQUENCY ONE/R	7. REQUIRING OFFICE DND ILS Manager

8. SUBMISSION SCHEDULE

First Submission (English): The Contractor must provide a draft English WTS Preservation, Storage and Reactivation Instructions for review by Canada at the same time as the first draft English WTS Maintenance Manual.

Response Time: Comments on the draft English WTS Preservation, Storage and Reactivation Instructions will be provided by Canada no later than 56 days after receipt of the hard copy submission.

Subsequent Submission(s) (English): The Contractor must provide a revised English WTS Preservation, Storage and Reactivation Instructions, addressing Canada's comments, for review and possible acceptance no later than 28 days after the receipt of Canada's comments.

Response Time: Comments or acceptance of the revised English WTS Preservation, Storage and Reactivation Instructions will be provided by Canada no later than 21 days after receipt of the hard copy submission.

First Submission (Bilingual): The Contractor must provide a draft Bilingual WTS Preservation, Storage and Reactivation Instructions for review by Canada no later than 84 days after the acceptance of the English WTS Preservation, Storage and Reactivation Instructions.

Response Time: Comments on the draft Bilingual WTS Preservation, Storage and Reactivation Instructions will be provided by Canada no later than 35 days after receipt of the hard copy submission.

Subsequent Submission(s) (Bilingual): The Contractor must provide a revised Bilingual WTS Preservation, Storage and Reactivation Instructions, addressing Canada's comments, for review and possible acceptance no later than 28 days after the receipt of Canada's comments.

Response Time: Comments or acceptance of the revised Bilingual WTS Preservation, Storage and Reactivation Instructions will be provided by Canada no later than 21 days after receipt of the hard copy submission.

9. DISTRIBUTION and ADDRESSEES

A. ADDRESSEE	B. COPIES			
	DRAFT		FINAL	
	Hard Copy	Soft Copy	Hard Copy	Soft Copy
DND ILSM	1	1	1	1

A2.26 CDRL – WTS Stowage, Shipping and Handling Instructions

CONTRACT DATA REQUIREMENTS LIST		
1. SYSTEM / ITEM Water Treatment System		
2. ITEM NUMBER CDRL WTS-ILS-210	3. TITLE OR DESCRIPTION OF DATA WTS Stowage, Shipping and Handling Instructions	4. AUTHORITY (Data Item Number) DID WTS-ILS-210
5. CONTRACT REFERENCE SOW: **Para. 8.3.1.9.1 (pg. 45)** DID: **App. A3.26 (pg. 207)**	6. FREQUENCY ONE/R	7. REQUIRING OFFICE DND ILS Manager

8. SUBMISSION SCHEDULE

First Submission (English): The Contractor must provide a draft English WTS Stowage, Shipping and Handling Instructions for review by Canada no later than 98 days following Design Acceptance.

Response Time: Comments on the draft English WTS Stowage, Shipping and Handling Instructions will be provided by Canada no later than 42 days after receipt of the hard copy submission.

Subsequent Submission(s) (English): The Contractor must provide a revised English WTS Stowage, Shipping and Handling Instructions, addressing Canada's comments, for review and possible acceptance no later than 35 days after the receipt of Canada's comments.

Response Time: Comments or acceptance of the revised English WTS Stowage, Shipping and Handling Instructions will be provided by Canada no later than 21 days after receipt of the hard copy submission.

First Submission (Bilingual): The Contractor must provide a draft Bilingual WTS Stowage, Shipping and Handling Instructions for review by Canada no later than 63 days after the acceptance of the English WTS Preservation, Storage and Reactivation Instructions.

Response Time: Comments on the draft Bilingual WTS Stowage, Shipping and Handling Instructions will be provided by Canada no later than 28 days after receipt of the hard copy submission.

Subsequent Submission(s) (Bilingual): The Contractor must provide a revised Bilingual WTS Stowage, Shipping and Handling Instructions, addressing Canada's comments, for review and possible acceptance no later than 28 days after the receipt of Canada's comments.

Response Time: Comments or acceptance of the revised Bilingual WTS Stowage, Shipping and Handling Instructions will be provided by Canada no later than 21 days after receipt of the hard copy submission.

9. DISTRIBUTION and ADDRESSEES

A. ADDRESSEE	B. COPIES			
	DRAFT		FINAL	
	Hard Copy	Soft Copy	Hard Copy	Soft Copy
DND ILSM	1	1	1	1

A2.27 **CDRL – WTS Data Summary**

CONTRACT DATA REQUIREMENTS LIST		
1. SYSTEM / ITEM Water Treatment System		
2. ITEM NUMBER CDRL WTS-ILS-211	3. TITLE OR DESCRIPTION OF DATA WTS Data Summary	4. AUTHORITY (Data Item Number) DID WTS-ILS-211
5. CONTRACT REFERENCE SOW: **Para. 8.3.1.10.1 (pg.45)** DID: **App. A3.27 (pg. 209)**	6. FREQUENCY ONE/R	7. REQUIRING OFFICE DND ILS Manager

8. SUBMISSION SCHEDULE

First Submission (English): The Contractor must provide a draft English WTS Data Summary for review by Canada at the same time as the first draft English WTS Stowage, Shipping and Handling Instructions.

Response Time: Comments on the draft English WTS Data Summary will be provided by Canada at the same time as those against the first draft English WTS Stowage, Shipping and Handling Instructions.

Subsequent Submission(s) (English): The Contractor must provide a revised English WTS Data Summary, addressing Canada's comments, for review and possible acceptance at the same time as subsequent versions of the English WTS Stowage, Shipping and Handling Instructions are submitted, or no later than 21 days from the receipt of Canada's comments if it has already been accepted.

Response Time: Comments or acceptance of the revised English WTS Data Summary will be provided by Canada at the same time as those against subsequent versions of the English WTS Stowage, Shipping and Handling Instructions are submitted, or no later than 21 days from the receipt the hardcopy submission if it has already been accepted.

First Submission (Bilingual): The Contractor must provide a draft Bilingual WTS Data Summary for review by Canada no later than 35 days after the acceptance of the English WTS Data Summary.

Response Time: Comments on the draft Bilingual WTS Data Summary will be provided by Canada no later than 21 days after receipt of the hard copy submission.

Subsequent Submission(s) (Bilingual): The Contractor must provide a revised Bilingual WTS Data Summary, addressing Canada's comments, for review and possible acceptance no later than 21 days after the receipt of Canada's comments.

Response Time: Comments or acceptance of the revised Bilingual WTS Data Summary will be provided by Canada no later than 14 calendar days after receipt of the hard copy submission.

9. DISTRIBUTION and ADDRESSEES

A. ADDRESSEE	B. COPIES			
	DRAFT		FINAL	
	Hard Copy	Soft Copy	Hard Copy	Soft Copy
DND ILSM	1	1	1	1

A2.28 **CDRL – MEU, ASU and WSU Stowage Maps**

CONTRACT DATA REQUIREMENTS LIST		
1. SYSTEM / ITEM Water Treatment System		
2. ITEM NUMBER CDRL WTS-ILS-212	3. TITLE OR DESCRIPTION OF DATA MEU, ASU and WSU Stowage Maps	4. AUTHORITY (Data Item Number) DID WTS-ILS-212
5. CONTRACT REFERENCE SOW: **Para. 8.3.1.11.1 (pg.46)** DID: **App. A3.28 (pg. 211)**	6. FREQUENCY ONE/R	7. REQUIRING OFFICE DND ILS Manager

8. SUBMISSION SCHEDULE

First Submission: The Contractor must provide draft MEU, ASU and WSU Stowage Maps for review by Canada at the same time as the first draft of the Illustrated Parts Manual.

Response Time: Comments on the draft MEU, ASU and WSU Stowage Maps will be provided by Canada no later than 28 days after receipt of the soft copy submission.

Subsequent Submission(s): The Contractor must provide a revised MEU, ASU and WSU Stowage Maps, addressing Canada's comments, for review and possible acceptance no later than 21 days after receipt of Canada's comments.

Response Time: As the NATO codification of stowed items progresses, Canada will provide the NATO stock numbers to the Contractor via email to then be included in the MEU, ASU and WSU Stowage Maps. Once all other aspects of the MEU, ASU and WSU Stowage Maps have been addressed, the Contractor need only supply the final Posters, with NSNs included, no later than 14 days after notification by Canada that the NATO codification is complete. If codification is unreasonably delayed by a third party, Canada may agree to accept an incomplete submission.

9. DISTRIBUTION and ADDRESSEES

A. ADDRESSEE	B. COPIES			
	DRAFT		FINAL	
	Hard Copy	Soft Copy	Hard Copy	Soft Copy
DND ILSM	1	1	1	1
MEU Map with each MEU			1	
ASU Map with each ASU			1	
WSU Map with each WSU			1	

A2.29 **CDRL – WTU Process and Flow Diagrams**

CONTRACT DATA REQUIREMENTS LIST		
1. SYSTEM / ITEM Water Treatment System		
2. ITEM NUMBER CDRL WTS-ILS-213	3. TITLE OR DESCRIPTION OF DATA WTU Process and Flow Diagrams	4. AUTHORITY (Data Item Number) DID WTS-ILS-213
5. CONTRACT REFERENCE SOW: **Para. 8.3.1.12.1 (pg.46)** DID: **App. A3.29 (pg. 212)**	6. FREQUENCY ONE/R	7. REQUIRING OFFICE DND ILS Manager

8. SUBMISSION SCHEDULE

First Submission: The Contractor must provide draft WTU Process and Flow Diagrams for review by Canada at the same time as the first draft of the English WTS Maintenance Manual.

Response Time: Comments on the draft WTU Process and Flow Diagrams will be provided by Canada no later than 42 days after receipt of the soft copy submission.

Subsequent Submission(s): The Contractor must provide revised WTU Process and Flow Diagrams, addressing Canada's comments, for review and possible acceptance no later than 28 days after receipt of Canada's comments.

Response Time: Comments or acceptance of the revised WTU Process and Flow Diagrams will be provided by Canada no later than 21 days after receipt of the soft copy submission.

9. DISTRIBUTION and ADDRESSEES

A. ADDRESSEE	B. COPIES			
	DRAFT		FINAL	
	Hard Copy	Soft Copy	Hard Copy	Soft Copy
DND ILSM	1	1	1	1
With each WTU			1	

A2.30 **CDRL – WSU Operation, Maintenance and Parts Handbook**

CONTRACT DATA REQUIREMENTS LIST

1. SYSTEM / ITEM
Water Treatment System

2. ITEM NUMBER	3. TITLE OR DESCRIPTION OF DATA	4. AUTHORITY (Data Item Number)
CDRL WTS-ILS-214	WSU Operation, Maintenance and Parts Handbook	DID WTS-ILS-214

5. CONTRACT REFERENCE	6. FREQUENCY	7. REQUIRING OFFICE
SOW: **Para. 8.3.1.13.1 (pg. 46)** DID: **App. A3.30 (pg. 214)**	ONE/R	DND ILS Manager

8. SUBMISSION SCHEDULE

First Submission: The Contractor must provide draft WSU Operation, Maintenance and Parks Handbook (OMPH) for review by Canada no later than 63 days following Design Acceptance.

Response Time: Comments on the draft WSU OMPH will be provided by Canada no later than 42 days after receipt of the soft copy submission.

Subsequent Submission(s): The Contractor must provide revised WSU OMPH, addressing Canada's comments, for review and possible acceptance no later than 28 days after receipt of Canada's comments.

Response Time: Comments or acceptance of the revised WSU OMPH will be provided by Canada no later than 21 days after receipt of the soft copy submission.

First Submission (Bilingual): The Contractor must provide a draft Bilingual WSU OMPH for review by Canada no later than 42 days after the acceptance of the English WSU OMPH.

Response Time: Comments on the draft Bilingual WSU OMPH will be provided by Canada no later than 21 days after receipt of the hard copy submission.

Subsequent Submission(s) (Bilingual): The Contractor must provide a revised Bilingual WSU OMPH, addressing Canada's comments, for review and possible acceptance no later than 21 days after the receipt of Canada's comments.

Response Time: Comments or acceptance of the revised Bilingual WSU OMPH will be provided by Canada no later than 14 calendar days after receipt of the hard copy submission.

9. DISTRIBUTION and ADDRESSEES

A. ADDRESSEE	B. COPIES			
	DRAFT		FINAL	
	Hard Copy	Soft Copy	Hard Copy	Soft Copy
DND ILSM	1	1	1	1
With each WSU			1	

A2.31 **CDRL – Provisioning Parts Breakdown**

CONTRACT DATA REQUIREMENTS LIST		
1. SYSTEM / ITEM Water Treatment System		
2. ITEM NUMBER CDRL WTS-ILS-215	3. TITLE OR DESCRIPTION OF DATA Provisioning Parts Breakdown	4. AUTHORITY (Data Item Number) DID WTS-ILS-215
5. CONTRACT REFERENCE SOW: **Para. 8.4.4.1.1 (pg. 48)** DID: **App. A3.31 (pg. 216)**	6. FREQUENCY ONE/R	7. REQUIRING OFFICE DND ILS Manager

8. SUBMISSION SCHEDULE

First Submission: The Contractor must provide a draft Provisioning Parts Breakdown for review by Canada at the same time as the first WTS Illustrated Parts Manual draft submission.

Response Time: Comments on the draft Provisioning Parts Breakdown will be provided by Canada at the same time as those for the draft WTS Illustrated Parts Manual.

Subsequent Submission(s): The Contractor must provide a revised Provisioning Parts Breakdown, addressing Canada's comments, for review and possible acceptance along with the second and any subsequent submission of the Illustrated Parts Manual, as required.

Response Time: Comments or acceptance of the revised Provisioning Parts Breakdown will be provided by Canada no later than 21 days after receipt of the soft copy submission.

Note: The Contractor must provide a subsequent submission of the Provisioning Parts Breakdown if additional revisions or additions are required after completion of the IPC.

9. DISTRIBUTION and ADDRESSEES

A. ADDRESSEE	B. COPIES			
	DRAFT		FINAL	
	Hard Copy	Soft Copy	Hard Copy	Soft Copy
DND ILSM		1		1

A2.32 CDRL – Supplementary Provisioning Technical Documentation

CONTRACT DATA REQUIREMENTS LIST		
1. SYSTEM / ITEM Water Treatment System		
2. ITEM NUMBER CDRL WTS-ILS-216	3. TITLE OR DESCRIPTION OF DATA Supplementary Provisioning Technical Documentation	4. AUTHORITY (Data Item Number) DID WTS-ILS-216
5. CONTRACT REFERENCE SOW: **Para. 8.4.4.2.1 (pg. 49)** DID: **App. A3.32 (pg. 218)**	6. FREQUENCY ONE/R	7. REQUIRING OFFICE DND ILS Manager

8. SUBMISSION SCHEDULE

First Submission: The Contractor must provide a draft Supplementary Provisioning Technical Documentation for review by Canada at the same time as the draft Provisioning Parts Breakdown submission.

Response Time: Comments on the draft Supplementary Provisioning Technical Documentation will be provided by Canada no later than 28 calendar days after receipt of the soft copy submission.

The Contractor must revise the draft Supplementary Provisioning Technical Documentation, addressing Canada's comments, and bring the revised Supplementary Provisioning Technical Documentation to the Initial Provisioning Conference.

Subsequent Submission(s) The Contractor must provide a revised Supplementary Provisioning Technical Documentation, addressing Canada's comments and changes resulting from decisions taken during the Initial Provisioning Conference, for review and possible acceptance no later than 21 calendar days from the end date of the Initial Provisioning Conference.

Response Time: Comments or acceptance of the revised Supplementary Provisioning Technical Documentation will be provided by Canada no later than 14 calendar days after receipt of the soft copy submission.

9. DISTRIBUTION and ADDRESSEES

A. ADDRESSEE	B. COPIES			
	DRAFT		FINAL	
	Hard Copy	Soft Copy	Hard Copy	Soft Copy
DND ILSM		1		1

A2.33 CDRL – Special Tools and Test Equipment List

CONTRACT DATA REQUIREMENTS LIST		
1. SYSTEM / ITEM Water Treatment System		
2. ITEM NUMBER CDRL WTS-ILS-217	3. TITLE OR DESCRIPTION OF DATA Special Tools and Test Equipment List	4. AUTHORITY (Data Item Number) DID WTS-ILS-217
5. CONTRACT REFERENCE SOW: **Para. 8.4.4.3.1 (pg. 49)** DID: **App. A3.33 (pg. 219)**	6. FREQUENCY ONE/R	7. REQUIRING OFFICE DND ILS Manager

8. SUBMISSION SCHEDULE

First Submission: The Contractor must provide a draft Special Tools and Test Equipment List for review by Canada no later than 49 days following Design Acceptance.

Response Time: Comments on the draft Special Tools and Test Equipment List will be provided by Canada no later than 28 days after receipt of the soft copy submission.

Subsequent Submission(s): The Contractor must provide a revised Special Tools and Test Equipment List, addressing Canada's comments, for review and possible acceptance no later than 21 days after receipt of Canada's comments.

Response Time: Comments or acceptance of the revised Special Tools and Test Equipment List will be provided by Canada no later than 14 calendar days after receipt of the soft copy submission.

9. DISTRIBUTION and ADDRESSEES

A. ADDRESSEE	B. COPIES			
	DRAFT		FINAL	
	Hard Copy	Soft Copy	Hard Copy	Soft Copy
DND ILSM		1		1

A2.34 **CDRL – Equipment Delivery Status Report**

CONTRACT DATA REQUIREMENTS LIST		
1. SYSTEM / ITEM Water Treatment System		
2. ITEM NUMBER CDRL WTS-ILS-218	3. TITLE OR DESCRIPTION OF DATA Equipment Delivery Status Report	4. AUTHORITY (Data Item Number) DID WTS-ILS-218
5. CONTRACT REFERENCE SOW: **Para. 8.4.4.4.1 (pg. 49)** DID: **App. A3.34 (pg. 221)**	6. FREQUENCY MNTHY	7. REQUIRING OFFICE DND ILS Manager

8. SUBMISSION SCHEDULE

First Submission: The Contractor must provide a Equipment Delivery Status Report (EDSR) for review by Canada no later than thirty (30) calendar days following the beginning of WTS production.

Response Time: Comments on the EDSR will be provided by Canada no later than five (5) business days after receipt of the soft copy submission.

Subsequent Submission(s): The Contractor must provide a revised EDSR, addressing Canada's comments, for review no later than five (5) business days after receipt of Canada's comments. The Contractor must provide updated EDSRs every thirty (30) days until every WTS is delivered to Canada.

Response Time: Comments or acceptance of the revised EDSR will be provided by Canada no later than five (5) business days after receipt of the soft copy submission.

9. DISTRIBUTION and ADDRESSEES

A. ADDRESSEE	B. COPIES	
	Hard Copy	Soft Copy
DND ILSM		1
PSPC CA		1
DND PA		1
DND TA		1

A2.35 **CDRL – Material Identification Data Set**

CONTRACT DATA REQUIREMENTS LIST		
1. SYSTEM / ITEM Water Treatment System		
2. ITEM NUMBER CDRL WTS-ILS-219	3. TITLE OR DESCRIPTION OF DATA Material Identification Data Set	4. AUTHORITY (Data Item Number) DID WTS-ILS-219
5. CONTRACT REFERENCE SOW: **Para. 8.4.4.5 (pg. 49)** DID: **App. A3.35 (pg. 223)**	6. FREQUENCY ONE/R	7. REQUIRING OFFICE DND ILS Manager

8. SUBMISSION SCHEDULE

First Submission: The Contractor must provide a Material Identification Data Set (MIDS) for review by Canada no later than twenty-eight (28) days following Design Acceptance, or in the case of new options purchases, no later than twenty-eight (28) days following the signing by Canada of the order(s).

Response Time: Comments on the MIDS will be provided by Canada no later than fourteen (14) days after receipt of the soft copy submission.

Subsequent Submission(s): The Contractor must provide a revised MIDS, addressing Canada's comments, for review no later than sevn (14) days after receipt of Canada's comments.

Response Time: Comments or acceptance of the revised EDSR will be provided by Canada no later than seven (7) days after receipt of the soft copy submission.

9. DISTRIBUTION and ADDRESSEES

A. ADDRESSEE	B. COPIES	
	DRAFT	FINAL
	Soft Copy	Soft Copy
DND ILSM	1	1
DND TA	1	1
DND PA	1	1

A2.36 CDRL – Identification Plates – Design Template & Populated Designs

CONTRACT DATA REQUIREMENTS LIST

1. SYSTEM / ITEM
Water Treatment System

2. ITEM NUMBER	3. TITLE OR DESCRIPTION OF DATA	4. AUTHORITY (Data Item Number)
CDRL WTS-ILS-220	Identification Plates – Design Template & Populated Designs	DID WTS-ILS-220

5. CONTRACT REFERENCE	6. FREQUENCY	7. REQUIRING OFFICE
SOW: **Para. 8.7.1 (pg. 50)** DID: **App. A3.36 (pg. 224)**	ONE/R	DND ILS Manager

8. SUBMISSION SCHEDULE

First Submission (Design Template): The Contractor must provide a draft Identification Plates design template for review by Canada no later than 112 days after the Kick off Meeting date.

Response Time: Comments on the draft Identification Plates design template will be provided by Canada no later than 35 days after receipt of the hard copy submission.

Subsequent Submission(s) (Design Template): The Contractor must provide a revised Identification Plates design template, addressing Canada's comments, for review and possible acceptance no later than 28 days after the receipt of Canada's comments.

Response Time: Comments or acceptance of the revised Identification Plates design template will be provided by Canada no later than 21 days after receipt of the hard copy submission.

First Submission (Populated Designs): The Contractor must provide all draft populated Identification Plate designs for review by Canada no later than 35 days after Design Acceptance.

Response Time: Comments on the draft populated Identification Plate designs will be provided by Canada no later than 21 days after receipt of the hard copy submission.

Subsequent Submission(s) (Populated Designs): The Contractor must provide revised populated Identification Plate designs, addressing Canada's comments, for review and possible acceptance no later than 14 days after the receipt of Canada's comments.

Response Time: Comments or acceptance of the revised populated Identification Plate designs will be provided by Canada no later than 14 days after receipt of the hard copy submission.

9. DISTRIBUTION and ADDRESSEES

A. ADDRESSEE	B. COPIES			
	DRAFT		FINAL	
	Hard Copy	Soft Copy	Hard Copy	Soft Copy
DND ILSM	1	1	1	1

A2.37 **CDRL – Controlled & Non-Controlled Goods List**

CONTRACT DATA REQUIREMENTS LIST		
1. SYSTEM / ITEM Water Treatment System		
2. ITEM NUMBER CDRL WTS-ILS-221	3. TITLE OR DESCRIPTION OF DATA Controlled & Non-Controlled Goods List (CNCGL)	4. AUTHORITY (Data Item Number) DID WTS-ILS-221
5. CONTRACT REFERENCE SOW: **Para. 8.8.1 (pg. 50)** DID: **App. A3.37 (pg. 225)**	6. FREQUENCY ONE/R	7. REQUIRING OFFICE DND ILS Manager

8. SUBMISSION SCHEDULE

First Submission: The Contractor must provide a draft CNCGL for review by Canada at the same time as the draft Provisioning Parts Breakdown submission.

Response Time: Comments on the draft CNCGL will be provided by Canada no later than 21 days after receipt of the soft copy submission.

Subsequent Submission(s) The Contractor must provide a revised CNCGL, addressing Canada's comments, for review and possible acceptance no later than 21 days after receipt of Canada's comments.

Response Time: Comments or acceptance of the revised CNCGL will be provided by Canada no later than 14 calendar days after receipt of the soft copy submission.

9. DISTRIBUTION and ADDRESSEES

A. ADDRESSEE	B. COPIES			
	DRAFT		FINAL	
	Hard Copy	Soft Copy	Hard Copy	Soft Copy
DND ILSM		1	1	1

A2.38 CDRL – Identification Labels for Storage and Shipment and Packaging Codes

CONTRACT DATA REQUIREMENTS LIST

1. SYSTEM / ITEM
Water Treatment System

2. ITEM NUMBER	3. TITLE OR DESCRIPTION OF DATA	4. AUTHORITY (Data Item Number)
CDRL WTS-ILS-222	Identification Labels for Storage and Shipment and Packaging Codes	DID WTS-ILS-222

5. CONTRACT REFERENCE	6. FREQUENCY	7. REQUIRING OFFICE
SOW: **Para. 8.9.3 (pg. 51)** DID: **App. A3.38 (pg. 227)**	ONE/R	DND ILS Manager

8. SUBMISSION SCHEDULE

Identification Labels for Storage and Shipment (ILSS) Template

First Submission:
The Contractor must provide draft ILSS Template(s) for review by Canada no later than 28 days following the close of the Initial Provisioning Conference.

Response Time: Comments on the draft ILSS Template(s) will be provided by Canada no later than 14 calendar days after receipt of the soft copy submission.

Subsequent Submission(s): The Contractor must provide revised ILSS Template(s), addressing Canada's comments, for review and possible acceptance no later than 14 calendar days after receipt of Canada's comments.

Response Time: Comments or acceptance of the ILSS Template(s) will be provided by Canada no later than 14 calendar days after receipt of the soft copy submission.

Packaging Codes (CF271 forms)
First Submission (WTS Main Equipment):
The Contractor must provide draft CF271 forms for review by Canada no later than 28 days after Canada provides to the Contractor the item(s)'s NATO Stock Number.

First Submission (Spare parts and consumables):
The Contractor must provide draft CF271 forms for review by Canada as prescribed in the Additional Work Request for the purchase of Initial Spares.

Response Time: Comments on the draft CF271 forms will be provided by Canada no later than 21 calendar days after receipt of the soft copy submission.

Subsequent Submission(s): The Contractor must provide revised CF271 forms, addressing Canada's comments, for review and possible acceptance no later than 14 calendar days after receipt of Canada's comments.

Response Time: Comments or acceptance of the revised CF271 forms will be provided by Canada no later than 14 calendar days after receipt of the soft copy submission.

9. DISTRIBUTION and ADDRESSEES

A. ADDRESSEE	B. COPIES			
	DRAFT		FINAL	
	Hard Copy	Soft Copy	Hard Copy	Soft Copy
DND ILSM (ILSS Template)		1		1
DND ILSM (CF271)		1		1

A2.39 **CDRL – List of Items to be Supported**

CONTRACT DATA REQUIREMENTS LIST		
1. SYSTEM / ITEM Water Treatment System		
2. ITEM NUMBER CDRL WTS-ILS-223	3. TITLE OR DESCRIPTION OF DATA List of Items to be Supported	4. AUTHORITY (Data Item Number) DID WTS-ILS-223
5. CONTRACT REFERENCE SOW: **Para. 8.10.1 (pg. 51)** DID: **App. A3.39 (pg. 229)**	6. FREQUENCY ONE/R	7. REQUIRING OFFICE DND ILS Manager

8. SUBMISSION SCHEDULE

First Submission: The Contractor must provide a draft List of Items to be Supported for review by Canada no later than 35 days following the final acceptance of the WTS Illustrated Parts Manual, PPB and SPTD.

Response Time: Comments on the draft List of Items to be Supported will be provided by Canada no later than 21 days after receipt of the soft copy submission.

Subsequent Submission(s): The Contractor must provide a revised List of Items to be Supported, addressing Canada's comments, for review and possible acceptance no later than 21 days after receipt of Canada's comments.

Response Time: Comments or acceptance of the revised List of Items to be Supported will be provided by Canada no later than 14 days after receipt of the soft copy submission.

9. DISTRIBUTION and ADDRESSEES

A. ADDRESSEE	B. COPIES			
	DRAFT		FINAL	
	Hard Copy	Soft Copy	Hard Copy	Soft Copy
DND ILSM		1		1

A2.40 **CDRL – Warranty Support Plan**

CONTRACT DATA REQUIREMENTS LIST		
1. SYSTEM / ITEM Water Treatment System		
2. ITEM NUMBER CDRL WTS-ILS-224	3. TITLE OR DESCRIPTION OF DATA Warranty Support Plan	4. AUTHORITY (Data Item Number) DID WTS-ILS-224
5. CONTRACT REFERENCE SOW: **Para. 8.12.1 (pg. 52)** DID: **App. A3.40 (pg. 236)**	6. FREQUENCY ONE/R	7. REQUIRING OFFICE DND ILS Manager

8. SUBMISSION SCHEDULE

First Submission: The Contractor must provide a draft Warranty Support Plan for review by Canada no later than 84 days following the kick-off meeting.

Response Time: Comments on the draft Warranty Support Plan will be provided by Canada no later than 28 days after receipt of the soft copy submission.

Subsequent Submission(s): The Contractor must provide a revised Warranty Support Plan, addressing Canada's comments, for review and possible acceptance no later than 28 days after receipt of Canada's comments.

Response Time: Comments or acceptance of the revised Warranty Support Plan will be provided by Canada no later than 21 days after receipt of the soft copy submission.

9. DISTRIBUTION and ADDRESSEES

A. ADDRESSEE	B. COPIES			
	DRAFT		FINAL	
	Hard Copy	Soft Copy	Hard Copy	Soft Copy
DND ILSM		1	1	1

A2.41 **CDRL – Equipment Environmental Assessment**

CONTRACT DATA REQUIREMENTS LIST		
1. SYSTEM / ITEM Water Treatment System		
2. ITEM NUMBER CDRL WTS-ILS-225	3. TITLE OR DESCRIPTION OF DATA Equipment Environmental Assessment	4. AUTHORITY (Data Item Number) DID WTS-ILS-225
5. CONTRACT REFERENCE SOW: **Para.** Error! Reference source not found. **(pg.** Error! Bookmark not defined.**)** DID: **App. A3.41 (pg. 238)**	6. FREQUENCY ONE/R	7. REQUIRING OFFICE DND ILS Manager

8. SUBMISSION SCHEDULE

First Submission: The Contractor must provide a draft Equipment Environmental Assessment for review by Canada no later than 84 days following the Design Acceptance.

Response Time: Comments on the draft Equipment Environmental Assessment will be provided by Canada no later than 56 days after receipt of the soft copy submission.

Subsequent Submission(s): The Contractor must provide a revised Equipment Environmental Assessment, addressing Canada's comments, for review and possible acceptance no later than 28 days after receipt of Canada's comments.

Response Time: Comments or acceptance of the revised Equipment Environmental Assessment will be provided by Canada no later than 14 days after receipt of the soft copy submission.

9. DISTRIBUTION and ADDRESSEES

A. ADDRESSEE	B. COPIES			
	DRAFT		FINAL	
	Hard Copy	Soft Copy	Hard Copy	Soft Copy
DND TA		1		1

A3.0 APPENDIX: DATA ITEM DESCRIPTION

A3.1 DID Item List

DID #	Title	CDRL #
WTS-PM-001	Project Management Plan	WTS-PM-001
WTS-PM-002	Contract Master Schedule	WTS-PM-002
WTS-PM-003	Contract Work Breakdown Structure	WTS-PM-003
WTS-PM-004	Contract Status Report	WTS-PM-004
WTS-PM-005	Meeting Agenda	WTS-PM-005
WTS-PM-006	Meeting Minutes	WTS-PM-006
WTS-SE-101	Systems Engineering Management Plan (SEMP)	WTS-SE-101
WTS-SE-102	Mandated System Review Package	WTS-SE-102
WTS-SE-103	Requirements Traceability Verification Matrix	WTS-SE-103
WTS-SE-104	Engineering Drawings & Associated Lists	WTS-SE-104
WTS-SE-105	Engineering Change Proposals	WTS-SE-105
WTS-SE-106	Configuration Status Accounting Report	WTS-SE-106
WTS-SE-107	Acceptance Test Plan and Procedures	WTS-SE-107
WTS-SE-108	Acceptance Test Reports	WTS-SE-108
WTS-ILS-201	Top Level Assembly Drawing	WTS-ILS-201
WTS-ILS-202	WTS Operator Manual	WTS-ILS-202
WTS-ILS-203	WTU Operator Quick Reference Card	WTS-ILS-203
WTS-ILS-204	WTS Maintenance Manual	WTS-ILS-204
WTS-ILS-205	WTS Permissive Repair Schedule and Standard Repair Times	WTS-ILS-205
WTS-ILS-206	WTS Illustrated Parts Manual	WTS-ILS-206
WTS-ILS-207	WTS Operator Training Package	WTS-ILS-207
WTS-ILS-208	WTU and ASU Technician Training Package	WTS-ILS-208
WTS-ILS-209	WTS Preservation, Storage and Reactivation Instructions	WTS-ILS-209
WTS-ILS-210	WTS Stowage, Shipping and Handling Instructions	WTS-ILS-210
WTS-ILS-211	WTS Data Summary	WTS-ILS-211
WTS-ILS-212	MEU, ASU and WSU Stowage Maps	WTS-ILS-212
WTS-ILS-213	WTU Process and Flow Diagrams	WTS-ILS-213
WTS-ILS-214	WSU Operation, Maintenance and Parts Handbook	WTS-ILS-214
WTS-ILS-215	Provisioning Parts Breakdown	WTS-ILS-215
WTS-ILS-216	Supplementary Provisioning Technical Documentation	WTS-ILS-216
WTS-ILS-217	Special Tools and Test Equipment List	WTS-ILS-217
WTS-ILS-218	Equipment Delivery Status Report	WTS-ILS-218

WTS-ILS-219	Material Identification Data Set	WTS-ILS-219
WTS-ILS-220	Identification Plates	WTS-ILS-220
WTS-ILS-221	Controlled & Non-Controlled Goods List	WTS-ILS-221
WTS-ILS-222	Identification Labels for Storage and Shipment and Packaging Codes	WTS-ILS-222
WTS-ILS-223	List of Items to be Supported	WTS-ILS-223
WTS-ILS-224	Warranty Support Plan	WTS-ILS-224
WTS-ILS-225	Equipment Environmental Assessment	WTS-ILS-225

A3.2 DID Table Definitions

The following section defines the various blocks of information found on the Data Item Description (DID) forms:

BLOCK 1 – TITLE
The title of the data item for the DID.

BLOCK 2 - IDENTIFICATION NUMBER
The Data Item Description (DID) number, consisting of a sequential three-digit number and prefixed with an abbreviation code, to uniquely identify the DID. Note that the 001-099 series is reserved to Project Management (PM) DIDs, the 101-199 series is reserved to Systems Engineering (SE) DIDs and the 201-299 series is reserved to Integrated Logistics Support (ILS) DIDs. The abbreviation codes used for the prefix are:

"PM" for Project Management
"SE" for Systems Engineering
"ILS" for Integrated Logistics Support

BLOCK 3 - DESCRIPTION
Provides a general description of the data content requirements.

BLOCK 4 – RELATED DOCUMENT(S)
Provides a listing of the related documents and specifications associated with and required to produce this DID.

BLOCK 5 - CONTRACT REFERENCE
The specific paragraph numbers from the Contract Statement of Work and CDRL to assist in identifying the work effort associated with the data item.

BLOCK 6 - PREPARATION INSTRUCTIONS
Provides the preparation instructions for the content and format requirements for the DID.

A3.3 DID – Project Management Plan

DATA ITEM DESCRIPTION	
1. TITLE **Project Management Plan (PMP)**	2. IDENTIFICATION NUMBER DID WTS-PM-001
3. DESCRIPTION The Project Management Plan (PMP) is the top-level plan that describes the Contractor's strategy, plans, methodologies and processes for meeting the requirements of the Contract.	
4. RELATED DOCUMENTS	5. CONTRACT REFERENCE SOW: **Para. 3.2.1 (pg. 17)** CDRL: **App. A2.3 (pg.118)**

6. PREPARATION INSTRUCTIONS

6.1. **CONTENT**

6.1.1. The PMP must describe the management processes, administrative procedures and organizational structure that will be used to manage the work of the Contractor.

6.1.2. The PMP must further detail the practices and procedures for project scheduling, planning, organizing, directing, executing, communicating, reporting, managing risk, managing environmental health and safety issues and impacts, managing information, and closing of action items for all Work required by the Contract.

6.1.3. The PMP must address in detail the above points through the following:

6.1.3.1. Overview:

6.1.3.1.1. Purpose, Background, Scope and Objectives;

6.1.3.1.2. Assumptions, Constraints and Risks;

6.1.3.1.3. All Project Deliverables;

6.1.3.1.4. Organization Summary; and

6.1.3.1.5. Schedule Summary.

6.1.3.2. Organization:

6.1.3.2.1. Project Management Organizational Chart, consisting of internal and external organizations as it pertains to this Contract;

6.1.3.3. Management Processes:

6.1.3.3.1. Project Management Approach and Procedures;

6.1.3.3.2. Schedule Control;

6.1.3.3.3. Quality Assurance;

6.1.3.3.4. Reporting;

6.1.3.3.5. Communications;

6.1.3.3.6. Risk Management (RM);

6.1.3.3.7. Environmental, Health and Safety Issues Management;

6.1.3.3.8. Information Management (IM); and

6.1.3.3.9. Change Control Processes.

6.2. **SOFT COPY FORMAT**

6.2.1. The PMP must be submitted as a PDF file type.

6.2.2. **Soft Copy format submission size below 7MB** – The PMP PDF may be submitted via email as follows:

6.2.2.1. To Field: As per the related CDRL section 9.A. Addressee, as identified in the contract.

6.2.2.2. Subject Field: WTS-PM-001 – PMP – [Rev #] – [Date of Issue]

6.2.3. **Soft Copy format submission size at or above 7MB** - The PMP PDF must be submitted on CD or DVD media and be labelled as follows:

6.2.3.1. Water Treatment System

6.2.3.2. PMP;

6.2.3.3. WTS-PM-001;

6.2.3.4. The Revision number, and

6.2.3.5. The date of issue.

A3.4 DID – Contract Master Schedule

DATA ITEM DESCRIPTION	
1. TITLE **Contract Master Schedule (CMS)**	2. IDENTIFICATION NUMBER DID WTS-PM-002
3. DESCRIPTION The CMS describes the Contractor's planned sequence of activities, milestones and decision points to enable the objectives of the Contract to be met. Additionally, the CMS defines the current Contract schedule status, comparing the current schedule to the contracted schedule. The CMS also compares the current schedule status with any applicable baseline schedule.	
4. RELATED DOCUMENTS The CMS inter-relates with the following data items: • Project Management Plan (PMP); and • Contract Work Breakdown Structure (CWBS).	5. CONTRACT REFERENCE SOW: **Para. 3.3.1 (pg. 17)** CDRL: **App. A2.4 (pg.119)**

6. PREPARATION INSTRUCTIONS

6.1. **CONTENT**

6.1.1. **Data to be Included**

6.1.1.1. The CMS must graphically depict the contract schedule and progress at the activity level.

6.1.1.2. The CMS must graphically present or otherwise identify:

6.1.1.2.1. activities and their estimated durations;

6.1.1.2.2. milestones, including milestones in the contract;

6.1.1.2.3. the relationships and dependencies between activities and milestones to be accomplished by or for the Contractor in the performance of its obligations under the contract;

6.1.1.2.4. earliest and latest start and finish dates for all activities and milestones;

6.1.1.2.5. critical and non-critical paths;

6.1.1.2.6. floats available on all activities and milestones;

6.1.1.2.7. allocated resources for each activity; and

6.1.1.2.8. notes on the use of the CMS, including a glossary of terms and symbols used.

6.1.1.3. The CMS must include:

6.1.1.3.1. all other schedules required under the contract (eg, the Systems Engineering schedule);

6.1.1.3.2. Subcontractor schedules, to a level of detail that is consistent with the level of detail for the Contractor's own schedule;

6.1.1.3.3. other major events, as agreed between the Contractor and DND;

6.1.1.3.4. DND tasks, where such tasks interface with, and may affect, Contractor tasks; and

6.1.1.3.5. significant reviews, such as Mandated System Reviews.

6.1.2. **Integration with Other Management Information**

6.1.2.1. The CMS must be traceable to the CWBS and to milestones in the contract.

6.1.3. **Narrative Analysis**

6.1.3.1. Each submission of the CMS must contain an explanation of the cause of each milestone's rescheduled forecast date that is later than the milestone's current approved scheduled baseline date for the issue of the CMS in which the rescheduled forecast date was first reported.

6.1.3.2. Subsequent issues of the CMS need only address changes from previously reported dates. The narrative analysis for the CMS must address possible impact on other milestones and activities, and must describe work-around plans to minimise the impact

6.2. **SOFT COPY FORMAT**

6.2.1. The CMS must be the primary schedule for the contract, and all other schedules must be subordinate to the CMS.

6.2.2. The CMS must be submitted as a PDF file type.

6.2.3. The CMS must be displayed in a variety of formats, including:

6.2.3.1. a Gantt chart;

6.2.3.2. a list of all tasks, together with their planned and actual start and completion dates; and

6.2.3.3. a listing of milestones (including Milestones in the contract), together with their original, rescheduled, forecast and actual completion dates.

6.2.4. **Soft Copy format submission size below 7MB** – The CMS PDF may be submitted via email as follows:

6.2.4.1. To Field: As per the related CDRL section 9.A. Addressee, as identified in the contract.

6.2.4.2. Subject Field: WTS-PM-002 – CMS – [Rev #] – [Date of Issue]

6.2.5. **Soft Copy format submission size at or above 7MB** - The CMS PDF must be submitted on CD or DVD media and be labelled as follows:

6.2.5.1. Water Treatment System

6.2.5.2. CMS;

6.2.5.3. WTS-PM-002;

6.2.5.4. The Revision number, and

6.2.5.5. The date of issue.

A3.5 DID – Contract Work Breakdown Structure

DATA ITEM DESCRIPTION	
1. TITLE **Contract Work Breakdown Structure (CWBS)**	2. IDENTIFICATION NUMBER DID WTS-PM-003
3. DESCRIPTION The CWBS forms the framework for Contract planning, management and status reporting and for estimating costs, schedule, resource requirements and technical achievements at completion.	
4. RELATED DOCUMENTS The CWBS is related to, and must be consistent with, the CMS.	5. CONTRACT REFERENCE SOW: **Para. 3.4.1 (pg. 17)** CDRL: **App. A2.5 (pg.120)**

6. PREPARATION INSTRUCTIONS

6.1. **CONTENT**

6.1.1. The CWBS must include a Work Breakdown Structure (WBS) index, a WBS graphic, and a WBS dictionary.

6.1.2. **WBS Index**

6.1.2.1. The CWBS must include a WBS index delivered in a tool that has an Outline Mode (specifically Microsoft Word), such that it can be reviewed at any level of expansion.

6.1.2.2. The WBS index must be derived from the WBS dictionary and each record in the WBS index must include:

6.1.2.2.1. WBS element number;

6.1.2.2.2. WBS element title;

6.1.2.2.3. WBS element revision date and revision number;

6.1.2.2.4. Task agency; and

6.1.2.2.5. Cross references to the conditions of contract and Statement of Work.

6.1.3. **WBS Graphic**

6.1.3.1. The CWBS must include a WBS graphic, which contains the same information as the WBS index, but shown in a graphical form, usually a tree structure.

6.2. **SOFT COPY FORMAT**

6.2.1. The CWBS must be submitted as a Microsoft Word file type.

6.2.2. **Soft Copy format submission size below 7MB** – The CWBS Microsoft Word file may be submitted via email as follows:

6.2.2.1. To Field: As per the related CDRL section 9.A. Addressee, as identified in the contract.

6.2.2.2. Subject Field: WTS-PM-003 – CWBS – [Rev #] – [Date of Issue]

6.2.3. **Soft Copy format submission size at or above 7MB** - The CWBS Microsoft Word file must be submitted on CD or DVD media and be labelled as follows:

6.2.3.1. Water Treatment System

6.2.3.2. CWBS;

6.2.3.3. WTS-PM-003;

6.2.3.4. The Revision number, and

6.2.3.5. The date of issue.

A3.6 DID – Contract Status Report

DATA ITEM DESCRIPTION	
1. TITLE **Contract Status Report (CSR)**	2. IDENTIFICATION NUMBER DID WTS-PM-004
3. DESCRIPTION The Contract Status Report (CSR) is the principal statement and explanation of the status of the contract at the end of each reporting period.	
4. RELATED DOCUMENTS	5. CONTRACT REFERENCE SOW: **Para. 3.5.1 (pg. 18)** CDRL: **App. A2.6 (pg.121)**

6. PREPARATION INSTRUCTIONS

6.1. **CONTENT**

6.1.1. The CSR must identify the date at which the CSR is valid, and the time period since the status date of the previous CSR (the 'reporting period').

6.1.2. The CSR must include the following information:

6.1.2.1. A summary of significant work activities (including those undertaken by major Subcontractors) undertaken during the reporting period;

6.1.2.2. A summary of significant work activities (including those undertaken by major Subcontractors) expected to be undertaken in the next reporting period.

6.1.2.3. A summary of progress (including progress by major Subcontractors) against the CMS.

6.1.2.4. A narrative detailing progress against milestones, expected date of completion of near milestones, problem areas and work-around plans where required;

6.1.2.5. A status report on contract data deliverable end items as called up in the CDRLs;

6.1.2.6. An engineering report, giving the status of engineering activity;

6.1.2.7. An Integrated Logistic Support (ILS) report, giving the status of ILS activity;

6.1.2.8. A list of correspondence that requires a response from the DND/PSPC, but for which no response has been received; and

6.1.2.9. A list of DND/PSPC correspondence to the Contractor for which a response is outstanding, and an estimate of the response date.

6.1.3. **Risk Register**

6.1.3.1. The CSR must include a Risk Register that reflects the current status of risk for the contract;

6.1.3.2. The Risk Register information provided must include:

6.1.3.2.1. Identification of each risk (sequence number, name and description);

6.1.3.2.2. Its likelihood and potential severity;

6.1.3.2.3. Who is assigned to manage the risk;

6.1.3.2.4. The planned risk response should the event occur; and

6.1.3.2.5. The risk mitigation (actions taken in advance to reduce probability/impact.

6.1.3.2.6. Once individual identified risks have been resolved, they can be removed from the active Risk Register.

6.1.4. **Configuration Change Register**

6.1.4.1. The CSR must include a Configuration Change Register (CCR), which records all activities relating to Contract Change Proposals (CCP), Engineering Change Proposals (ECPs) and Deviations during the reporting period. The first section of the CCR must contain active items, and the second section must contain brief details of closed and completed items.

6.1.4.2. The active items section of the CCR must include information such as reference number, title, abstract, date raised, date approved, affected section of the contract, responsible party, cost/savings involved, date of last action, status at last action, target date for completion of next action, target status at completion of next action, and target date for completion of the CCP, ECP, or Deviation.

6.1.4.3. The closed and completed section of the CCR must include information such as reference number, title, abstract, affected section of the contract, cost/savings involved, and closure/completion date.

6.2. **SOFT COPY FORMAT**

6.2.1. The CSR must be submitted as a PDF file type.

6.2.2. The CSR PDF must be submitted via email (submission size not to exceed 7MB) as follows:

6.2.2.1. To Field: As per the related CDRL section 9.A. Addressee, as identified in the contract.

6.2.2.2. Subject Field: WTS-PM-004 – CSR – [Rev #] – [Date of Issue]

A3.7 DID – Meeting Agenda

DATA ITEM DESCRIPTION	
1. TITLE **Meeting Agenda**	2. IDENTIFICATION NUMBER DID WTS-PM-005
3. DESCRIPTION The Meeting Agenda contains the venue information and identifies the discussion items to be covered at meetings.	
4. RELATED DOCUMENTS	5. CONTRACT REFERENCE SOW: **Para. 3.6.6.1.1 (pg. 19)** CDRL: **App. A2.7 (pg.122)**

6. PREPARATION INSTRUCTIONS

6.1. **CONTENT**

6.1.1. The Meeting Agenda must set forth the venue, identify all requirements and list the discussion items to be covered at the meeting.

6.1.2. Venue. The Meeting Agenda must address the venue as follows:

6.1.2.1. Meeting Identification Number;
6.1.2.2. Purpose;
6.1.2.3. Date, time and location; and
6.1.2.4. Attendees.

6.1.3. Discussion items. The Meeting Agenda must address the discussion items through the following sections:

6.1.3.1. Opening Remarks;
6.1.3.2. Agenda Review;
6.1.3.3. Review of Previous Minutes;
6.1.3.4. Opened Discussion Items;
6.1.3.5. New Discussion Items;
6.1.3.6. Review of Action Items;
6.1.3.7. Next Venue; and
6.1.3.8. Closing Remarks.

6.2. **HARD COPY FORMAT**

6.2.1. The Meeting Agenda must be printed on paper with these characteristics:

6.2.1.1. Weight of no less than 90 gsm;
6.2.1.2. Brightness of no less than 92 ISO brightness;

6.3. **SOFT COPY FORMAT**

6.3.1. The Meeting Agenda must be submitted as a MS Word file type.

6.3.2. The Meeting Agenda MS Word document must be submitted via email (submission size not to exceed 7MB) as follows:

6.3.2.1. To Field: As per the related CDRL section 9.A. Addressee, as identified in the contract.

6.3.2.2. Subject Field: WTS-PM-005 – Meeting Agenda – [Rev #] – [Date of Issue]

A3.8 DID – Meeting Minutes

DATA ITEM DESCRIPTION	
1. TITLE **Meeting Minutes**	2. IDENTIFICATION NUMBER DID WTS-PM-006
3. DESCRIPTION The Meeting Minutes contains the detailed records of proceedings, discussions, decisions and action items from meetings.	
4. RELATED DOCUMENTS	5. CONTRACT REFERENCE SOW: **Para. 3.6.6.1.1 (pg. 19)** CDRL: **App. A2.8 (pg.123)**

6. PREPARATION INSTRUCTIONS

6.1. **CONTENT**

6.1.1. The Meeting Minutes must contain the detailed records of proceedings, discussions, decisions and action items from the meeting and be presented through the following sections:

6.1.1.1. General – consisting of meeting identification number, purpose, date, time and location;

6.1.1.2. Attendees, consisting of the organization each person represents, and the identification of the Chairperson(s);

6.1.1.3. Opening Remarks;

6.1.1.4. **Action Item Report** - used to monitor issues, assign responsibility, direct action and track status, history, and progress, and must consisting of:

6.1.1.4.1. Item #; date initiated; required action; assigned actionee; target completion date; cross-reference to all related action items.

6.1.1.4.2. Action Item Report must be **updated** with each meeting and must consisting of:

6.1.1.4.2.1. Action Item current status and the actual date completed;

6.1.1.5. Next Venue;

6.1.1.6. Closing Remarks;

6.2. **SOFT COPY FORMAT**

6.2.1. The Meeting Minutes must be submitted as a PDF file type.

6.2.2. The Meeting Minutes PDF must be submitted via email (submission size not to exceed 7MB) as follows:

6.2.2.1. To Field: As per the related CDRL section 9.A. Addressee, as identified in the contract.

6.2.2.2. Subject Field: WTS-PM-006 – Meeting Minutes – [Rev #] – [Date of Issue]

A3.9 DID – Systems Engineering Management Plan

DATA ITEM DESCRIPTION	
1. TITLE **Systems Engineering Management Plan (SEMP)**	2. IDENTIFICATION NUMBER DID WTS-SE-101
3. DESCRIPTION The SEMP describes the Contractor's strategy, plans, methodologies and processes for the management of a fully integrated engineering program IAW the contract. The SEMP describes the relationships between concurrent activities as well as between sequential activities to demonstrate that a fully integrated engineering program has been achieved.	
4. RELATED DOCUMENTS **IEEE 15288.1**, *IEEE Standard for Application of Systems Engineering on Defense Programs* **IEEE 15288.2**, *IEEE Standard for Technical Reviews and Audits on Defense Programs* **ANSI/EIA-649-C**, *Configuration Management Standard*	5. CONTRACT REFERENCE SOW: **Para. 4.2.2.1 (pg. 20)** CDRL: **App. A2.9 (pg. 124)**

6. PREPARATION INSTRUCTIONS

6.1. **CONTENT**

6.1.1. **Engineering Management**

6.1.1.1. The SEMP must define the engineering organisation for the contract, including the key engineering positions, and the partitioning of engineering effort between the various Contractor and Subcontractor organisations.

6.1.1.2. The SEMP must describe how technical effort will be coordinated to meet cost, schedule, and performance objectives.

6.1.1.3. The SEMP must summarise planned personnel needs, applicable to the various phases of the contract, by discipline and level of expertise.

6.1.1.4. The SEMP must identify the standards (eg, IEEE 15288 and ANSI/EIA-649-C) to be utilised by the Contractor and Subcontractors to undertake the Systems Engineering, software, Configuration Management (CM) and Verification activities, including the proposed tailoring of those standards to meet requirements of the contract.

6.1.1.5. The SEMP Management/Organization portion must describe the Contractor's systems engineering organization, responsibilities, terms of reference, internal operating relationships within the company, external operating relationships with subcontractors, management relationships, management procedures and supporting and tracking system.

6.1.2. **Systems Engineering Process**

6.1.2.1. The SEMP must define the tailored application of the Contractor's Systems Engineering process to the activities of the contract, including:

6.1.2.1.1. the major products and/or increments to be delivered;

6.1.2.1.2. the major outcomes to be achieved;

6.1.2.1.3. the major Systems Engineering tools that will be used for the Contract;

6.1.2.1.4. the methods for documentation and control of engineering and technical information, including expected specifications and Configuration Baselines;

6.1.2.1.5. the methods and tools for analysis and validation of system requirements;

6.1.2.1.6. the required implementation tasks, including the integration and assembly of the system; and

6.1.2.1.7. the approach, methods, procedures, and tools to be used for systems analysis and control, including establishing and maintaining requirements traceability.

6.1.3. **Technical Risk Management**

6.1.3.1. The SEMP must describe the risk-management strategies associated with any global, engineering-related risks.

6.1.4. **Software Development and Management**

6.1.4.1. The SEMP must define the tailored application of the Contractor's software processes to the activities of the Contract, including:

6.1.4.1.1. the management of software development activities undertaken by Subcontractors; and

6.1.4.1.2. the development of software being undertaken by the Contractor.

6.1.5. **System Reviews**

6.1.5.1. The SEMP must describe the approach planned to establish and conduct all System Reviews (i.e. Mandated System Reviews and Internal System Reviews) required under the contract.

6.1.5.2. The SEMP must describe, for each engineering related System Review, the relationship between the System Review and other engineering program activities.

6.1.5.3. Based on the SOW requirements for System Reviews and the Contractor's internal processes, the SEMP must detail the following information for each of the engineering related System Reviews:

6.1.5.3.1. organisations and individuals involved in the review and their specific review responsibilities;

6.1.5.3.2. proposed review venue;

6.1.5.3.3. review objectives;

6.1.5.3.4. pre-requisites for the conduct of the review (i.e. entry criteria);

6.1.5.3.5. actions to be addressed during the System Review, including the documentation to be reviewed;

6.1.5.3.6. essential review completion criteria (i.e. exit criteria); and

6.1.5.3.7. applicable Milestone criteria specified in the contract.

6.1.6. **Growth, Evolution and Obsolescence**

6.1.6.1. The SEMP must, for the Contractor's growth, evolution and Obsolescence program:

6.1.6.1.1. describe the technical measures and methods to be used to identify and assess candidate elements, including hardware and software items, and the primary candidate elements to be addressed under by program;

6.1.6.1.2. describe the application of design aspects (e.g. modularity and 'open architectures') to improve system growth, facilitate evolution, and to counter Obsolescence;

6.1.6.1.3. identify the steps to be undertaken during the acquisition phase to balance technological maturity and Obsolescence risks, and solutions to minimise the complexity (and cost) of through-life upgrades; and

6.1.6.1.4. identify the steps to be undertaken during the support phase to maintain effective and supportable equipment configurations and the expected need for upgrades.

6.1.7. **Human Engineering**

6.1.7.1. The SEMP must, for the Contractor's Human Engineering program:

6.1.7.1.1. identify the standards to be used, and that have been used for COTS / MOTS items, and describe the application of those standards to meet the Human Engineering requirements of the system;

6.1.7.1.2. the activities, including system functional requirements analysis, equipment design and procedures development activities, to be undertaken in order to meet the Human Engineering required under the contract; and

6.1.7.1.3. the Verification methods to be applied for the Human Engineering program.

6.1.8. **Configuration Management**

6.1.8.1. The SEMP must describe the Contractor's CM methodology, processes and activities for meeting the CM requirements of the contract, including:

6.1.8.1.1. the approach planned to establish and maintain Configuration Control and audit of identified system products and processes;

6.1.8.1.2. the requirements for establishing Configuration Baselines and the documentation to be used to define each baseline; and

6.1.8.1.3. the approach planned to establish and maintain control of external and internal interfaces.

6.1.8.2. Configuration Identification

6.1.8.2.1. Selection of Configuration Items

6.1.8.2.1.1. The SEMP must define the procedures for the selection of CIs, and detail the criteria used for their selection. The SEMP must, by inclusion or reference, define the list of CIs and their respective specifications and other defining top-level documentation.

6.1.8.2.2. Configuration Baselines

6.1.8.2.2.1. The SEMP must define the requirements for establishing Configuration Baselines, and include:

6.1.8.2.2.1.1. the procedures for the establishment of, at least, the Functional, Allocated and Product Baselines; and

6.1.8.2.2.1.2. the documentation to be used to define each Configuration Baseline.

6.1.8.2.3. Engineering Release

6.1.8.2.3.1. The SEMP must define the procedures for issuing approved configuration documentation, and amendments to this documentation, to functional activities (e.g. manufacturing, logistics, and acquisition) within the Contractor's organisation.

6.1.8.2.4. Configuration Control

6.1.8.2.4.1. The SEMP must define the procedures, including DND involvement, and associated documentation for processing the following:

6.1.8.2.4.1.1. classification of changes, and the level of authority for change approval / concurrence;

6.1.8.2.4.1.2. Contractual change requests;

6.1.8.2.4.1.3. Major Changes;

6.1.8.2.4.1.4. Minor Changes;

6.1.8.2.4.1.5. requests for Deviations/Waivers; and

6.1.8.2.4.1.6. Specification Change Notices.

6.1.8.3. Configuration Status Accounting (CSA)

6.1.8.3.1. The SEMP must define the procedures for CSA, including:

6.1.8.3.1.1. methods for collecting, recording, processing and maintaining the data required to provide the status of accounting information through reports on the CSA database.

6.1.8.3.1.2. a complete description of the CSA database with respect to the areas related to:

6.1.8.3.1.2.1. the identification of the currently approved configuration documentation and configuration identifiers associated with each CI;

6.1.8.3.1.2.2. the status of proposed engineering changes from initiation to implementation;

6.1.8.3.1.2.3. the results of configuration audits, and the status and disposition of discrepancies;

6.1.8.3.1.2.4. the status of requests for deviations;

6.1.8.3.1.2.5. the ability to trace changes from the baseline documentation of each CI; and

6.1.8.3.1.2.6. the effectiveness and installation status of configuration changes to all Cis.

6.1.8.4. Configuration Audits

6.1.8.4.1. The SEMP must:

6.1.8.4.1.1. describe the Contractor's methodology and processes to establish and conduct Physical Configuration Audits (PCAs);

6.1.8.4.1.2. describe the plans, procedures, documentation, and schedules for the audits; and

6.1.8.4.1.3. describe the format for reporting results of in-process audits.

6.1.8.5. Subcontractor Control

6.1.8.5.1. The SEMP must define the methods used to ensure that Subcontractors comply with the Configuration Management requirements of the contract.

6.1.9. **Verification**

6.1.9.1. The SEMP must, for the Contractor's Verification program:

6.1.9.1.1. describe the overall Verification program objectives, activities and schedule;

6.1.9.1.2. describe the use of the RTVM and the extent to which previous Verification results are proposed to be used for Acceptance Verification purposes;

6.1.9.1.3. describe the process for recording Failure reporting and analysis, and the approach to regression testing; and

6.1.9.1.4. identify the requirements for DND Personnel and other resources in order to conduct the Verification program.

6.1.9.2. Verification Activities

6.1.9.2.1. The SEMP must describe the verification activities to be conducted to demonstrate that the system offered for acceptance complies with the requirements of the contract.

6.1.9.2.2. The SEMP must describe all test activities to be included in the verification of the system.

6.1.9.2.3. The SEMP must detail requirements and procedures for the DND provision of resources for, and involvement in, or witnessing of, verification activities.

6.1.9.2.4. Where the Contractor proposes to claim previous verification results as precluding the need for specific verification activities within the Verification program, the SEMP must summarise:

6.1.9.2.4.1. the scope and context of the previous verification activities;

6.1.9.2.4.2. the reasons why the previous results preclude the need for specific verification activities including how the previous results are valid for the configuration of the system, and the intended operational role and environment; and

6.1.9.2.4.3. how the previous verification results will be integrated into the planned verification activities and the RTVM.

6.1.9.3. Flow Diagram

6.1.9.3.1. The SEMP must include an overall flow diagram of the verification program for the system, this flow must be sequentially arranged to include:

6.1.9.3.1.1. all significant verification milestones and efforts in the development phase associated with each class of verification;

6.1.9.3.1.2. hardware and software integration schedules;

6.1.9.3.1.3. requirements for concurrency of verification activities;

6.1.9.3.1.4. the Contractor/Subcontractor or group responsible for each verification event; and

6.1.9.3.1.5. any additional information that clarifies the description of the test program.

6.1.9.3.2. The flow diagram must reflect predicted dates for significant milestones.

6.1.9.4. Verification Objectives

6.1.9.4.1. The SEMP must specify the broad objective for each verification phase for the system, and objectives must be specified in terms of verifying part or all of system or lower level specifications (e.g. subsystem specifications).

6.1.9.5. Test Readiness Reviews

6.1.9.5.1. The SEMP must outline the procedures for conducting Test Readiness Reviews (TRRs).

6.1.9.6. Failure and Corrective Action Management

6.1.9.6.1. The SEMP must describe the Problem Resolution System used for the collection of Failure data for the system and must identify when it will be established.

6.1.9.6.2. The SEMP must identify the process used to analyse failures and track the corrective action taken as a result of a failure, and the interaction with the engineering development groups, logistic organisation, Subcontractors and the DND.

6.1.9.6.3. The SEMP must identify how regression testing for the system will be managed following test failure or design change throughout the Verification program.

6.2. **SOFT COPY FORMAT**

6.2.1. The SEMP must be submitted as a PDF file type.

6.2.2. **Soft Copy format submission size below 7MB** – The SEMP PDF may be submitted via email as follows:

6.2.2.1. To Field: As per the related CDRL section 9.A. Addressee, as identified in the contract.

6.2.2.2. Subject Field: WTS-SE-101– SEMP – [Rev #] – [Date of Issue]

6.2.3. **Soft Copy format submission size at or above 7MB** - The SEMP PDF must be submitted on CD or DVD media and be labelled as follows:

6.2.3.1. Water Treatment System;

6.2.3.2. SEMP;

6.2.3.3. WTS-SE-101;

6.2.3.4. The Revision number, and

6.2.3.5. The date of issue.

A3.10 DID – Mandated System Review Package

DATA ITEM DESCRIPTION	
1. TITLE **Mandated System Review Package (MSR) Package**	2. IDENTIFICATION NUMBER DID WTS-SE-102
3. DESCRIPTION The purpose of MSR Package is to allow the Contractor and DND Representatives to prepare for MSRs in order to gain maximum value from the reviews.	
4. RELATED DOCUMENTS	5. CONTRACT REFERENCE SOW: **Para. 4.2.4.4 (pg. 21)** CDRL: **App.A2.10 (pg.125)**

6. PREPARATION INSTRUCTIONS

6.1. **CONTENT**

6.1.1. The MSR Package must include information to be reviewed and discussed at the specific MSR, including:

6.1.1.1. documentation that is necessary to show that the objectives of the MSR have been satisfied;

6.1.1.2. presentation material on the topics of discussion as described in the SOW;

6.1.1.3. all relevant documents not previously delivered and needed to meet the objectives and entry criteria of the MSR;

6.1.1.4. where applicable to the MSR, status of technical performance measures against expectations; and

6.1.1.5. where applicable to the MSR, current configuration status along with any identified discrepancies in Configuration Baselines.

6.2. **SOFT COPY FORMAT**

6.2.1. The MSR Package must be submitted as a PDF file type.

6.2.2. **Soft Copy format submission size below 7MB** – The MSR Package PDF may be submitted via email as follows:

6.2.2.1. To Field: As per the related CDRL section 9.A. Addressee, as identified in the contract.

6.2.2.2. Subject Field: WTS-SE-102– MSR Package – [Rev #] – [Date of Issue]

6.2.3. **Soft Copy format submission size at or above 7MB** - The MSR Package PDF must be submitted on CD or DVD media and be labelled as follows:

6.2.3.1. Water Treatment System;

6.2.3.2. MSR Package;

6.2.3.3. WTS-SE-102;

6.2.3.4. The Revision number, and

6.2.3.5. The date of issue.

A3.11 DID – Requirements Traceability Verification Matrix

DATA ITEM DESCRIPTION	
1. TITLE **Requirements Traceability Verification Matrix (RTVM)**	2. IDENTIFICATION NUMBER DID WTS-SE-103
3. DESCRIPTION The RTVM provides bidirectional traceability from high-level system performance requirements, to the lowest-level requirements. The RTVM shows the traceability and allocation of the requirements contained in the specification tree (i.e. performance specification, detailed specification, subsystem specification, software requirements specification, interface specification and design documentation). The RTVM is also used to verify how each requirement is verified.	
4. RELATED DOCUMENTS Technical Specification at Appendix A1.0 to ANNEX A1	5. CONTRACT REFERENCE SOW: **Para. 4.2.5.1 (pg. 22)** CDRL: **App. A2.11 (pg.126)**

6. PREPARATION INSTRUCTIONS

6.1. **CONTENT**

6.1.1. The RTVM must provide backwards and forward traceability through multiple levels of design hierarchy (i.e. the RTVM must document each requirement from its source through analysis, design, testing, and acceptance), to assess the impact of potential specification changes.

6.1.2. The RTVM must include the verification criteria for each requirement for testing purposes.

6.1.3. For the PDR and CDR, the RTVM must contain the following:

6.1.3.1. **Architecture Description Page**: Include a detailed description of the RTVM, show relationships and define all the terms, acronyms used in the RTVM fields.

6.1.3.2. **Unique Identification:** A unique identifier for each requirement;

6.1.3.3. **Requirement Source & Reference:** The paragraph number and requirement statement (or brief summary of the requirement to provide context);

6.1.3.4. **Requirement Allocation**: Enter the specific system, subsystem, hardware item, component, Computer Software Configuration Item, Computer Software Component and Computer Software Unit that each requirement has been allocated. System level requirements must be allocated to all Configuration Items defined for the system.

6.1.3.5. **Form of End Product**: Enter the form and maturity level of the end product used for verification. For example the form can be the system, subsystem, unit level, software configuration Item and the maturity level can be the prototype, first production article, or final configuration item.

6.1.3.6. **Verification Method**: For each requirement, enter the verification method as follows:

6.1.3.6.1. “Certification” – Two forms of Certification are possible: - the first would be from a 3rd party recognized association of technical knowledge and expertise in the applicable area being sought, and the second from an "in house" qualified expert that would certify that the standards are met IAW their own testing or investigation and is attesting to their professional opinion.

6.1.3.6.2. “Analysis” – An element of verification that uses established technical or mathematical models or simulations, algorithms, charts, graphs, circuit diagrams, or other scientific principles and procedures to provide evidence that stated requirements were met.

6.1.3.6.3. “Inspection” – An element of verification that is generally non-destructive and typically includes the use of sight, hearing, smell, touch, and taste; simple physical manipulation; and mechanical and electrical gauging and measurement.

6.1.3.6.4. "Demonstration" – An element of verification that involves the actual operation of an item to provide evidence that the required functions were accomplished under specific scenarios. The items may be instrumented and performance monitored.

6.1.3.6.5. "Test" – An element of verification in which scientific principles and procedures are applied to determine the properties or functional capabilities of items.

6.1.3.7. **Description of Verification:** A brief description of the verification method, intended as a vehicle for early agreement by both parties to define the scope of the verification activities.

6.1.3.8. **Comments:** Enter explanatory notes as required.

6.1.4. For the TRR and after completion of the Acceptance Verification (and ATRs), the RTVM must contain the following:

6.1.4.1. **Verification Document**: Enter the document number, title, and date of the verification document that contains the verification method.

6.1.4.2. **Verification Document Paragraph**: Enter the verification document paragraph number that provides the verification method.

6.1.4.3. **Verification Procedure**: Enter the verification procedure section, and verification procedure step(s) that provides the verification method for each requirement.

6.1.4.4. **Other Tests**: Enter the names of other tests conducted, prior to verification of the requirement, where the requirement is being tested.

6.1.4.5. **Verification Results**: Enter the results of the verification for each requirement. Did system under test conform to the requirement? (Yes, No).

6.1.4.6. **Corrective Actions**: Enter all corrective actions taken and the results of the corrective actions.

6.1.4.7. **Comments**: Enter explanatory notes as required.

6.2. **SOFT COPY FORMAT**

6.2.1. The RTVM must be in an Excel Spreadsheet (MS Office Professional Plus 2013) / electronic relational database (DOORS 9.5 or Access Database (MS Office Professional Plus 2013)) format that can be manipulated to show bidirectional requirements traceability and track the verification of each requirement.

6.2.2. **Soft Copy format submission size below 7MB** – The RTVM may be submitted via email as follows:

6.2.2.1. To Field: As per the related CDRL section 9.A. Addressee, as identified in the contract.

6.2.2.2. Subject Field: WTS-SE-103 – RTVM – [Rev #] – [Date of Issue]

6.2.3. **Soft Copy format submission size at or above 7MB -** The RTVM must be submitted on CD or DVD media and be labelled as follows:

6.2.3.1. Water Treatment System

6.2.3.2. RTVM;

6.2.3.3. WTS-SE-103;

6.2.3.4. The Revision number, and

6.2.3.5. The date of issue.

A3.12 DID – Engineering Drawings and Associated Lists

DATA ITEM DESCRIPTION	
1. TITLE **Engineering Drawings and Associated Lists**	2. IDENTIFICATION NUMBER DID WTS-SE-104
3. DESCRIPTION The Engineering Drawings and Associated Lists will accurately define the interface to external systems and will enable the system to be maintained and supported over its life.	
4. RELATED DOCUMENTS **APPENDIX A4.0:** APPENDIX: COMMERCIAL (OEM) ENGINEERING DRAWINGS AND ASSOCIATED LISTS	5. CONTRACT REFERENCE SOW: **Para. 4.3.3.1 (pg. 25)** CDRL: **App. A2.12 (pg.127)**

6. PREPARATION INSTRUCTIONS

6.1. **CONTENT**

6.1.1. The Engineering Drawings and Associated Lists must be provided IAW the requirements described in Appendix A4.0.

6.2. **SOFT COPY FORMAT**

6.2.1. The Engineering Drawings, Associated Lists, Reference Data, and the associated Metadata must be submitted as soft copy deliverables as described in Appendix A4.0.

6.2.2. **Soft Copy format submission size below 7MB** – The Engineering Drawings and Associated Lists may be submitted via email as follows:

6.2.2.1. To Field: As per the related CDRL section 9.A. Addressee, as identified in the contract.

6.2.2.2. Subject Field: WTS-SE-104 – Engineering Drawings and Associated Lists – [Rev #] – [Date of Issue]

6.2.3. **Soft Copy format submission size at or above 7MB** - The Engineering Drawings and Associated Lists must be submitted on CD or DVD media and be labelled as follows:

6.2.3.1. Water Treatment System

6.2.3.2. Engineering Drawings and Associated Lists;

6.2.3.3. WTS-SE-104;

6.2.3.4. The Revision number, and

6.2.3.5. The date of issue.

A3.13 DID – Engineering Change Proposal

DATA ITEM DESCRIPTION	
1. TITLE **Engineering Change Proposal (ECP)**	2. IDENTIFICATION NUMBER DID WTS-SE-105
3. DESCRIPTION An ECP is a request for authorization to make changes to an approved baseline. An ECP includes the documentation both to describe and to substantiate the engineering change.	
4. RELATED DOCUMENTS **ACMP-2009** – *Guidance on Configuration Management*	5. CONTRACT REFERENCE SOW: **Para. 5.4.2 (pg. 27)** CDRL: **App. A2.13 (pg.128)**

6. PREPARATION INSTRUCTIONS

6.1. **CONTENT**

6.1.1. The following refers to the ECP form following this DID.

6.1.2. **Block 1**. The Contractor must enter the submittal date of the ECP.

6.1.3. **Block 2**. The Contractor must enter the originating organization's name, address and contact information.

6.1.4. **Block 3**. The Contractor must classify the ECP IAW ACMP-2009, and enter the class of ECP as either "Class I" or "Class II".

6.1.5. **Block 4**. The Contractor must use at least one of the following codes to classify the ECP:

6.1.5.1. B – Functional Baseline, Allocated Baseline or Product Baseline changed from established baseline;

6.1.5.2. C – Compatibility with interfacing items;

6.1.5.3. D – Delivered operational or maintenance manuals require change;

6.1.5.4. G – Government Furnished Equipment affected;

6.1.5.5. I – Interchangeability or replaceabililty affected;

6.1.5.6. O – Operational or logistics support change;

6.1.5.7. P – Personnel skills, manning, training or human factors engineering consideration;

6.1.5.8. S – Safety or security; or

6.1.5.9. Z – Contractual item such as cost or schedule.

6.1.6. **Block 5**. The Contractor must recommend the a priority for processing the ECP from the following:

6.1.6.1. E - Emergency. Vital modification required to rectify a condition which may result in a serious hazard to personnel or equipment or may seriously compromise national security. ECP to be actioned within 24 hours.

6.1.6.2. U - Urgent. Urgent modification required to rectify a condition that results in degraded mission effectiveness. ECP to be actioned within 5 days.

6.1.6.3. R - Routine. ECP to be actioned within 30 days.

6.1.7. **Block 6**. The Contractor must describe the ECP with the following:

6.1.7.1. No. A unique number consisting of "ECP-Y-NNN", where:

6.1.7.1.1. Y – C (Contractor) or P (Project Office – DND) indicating ECP originator, and

6.1.7.1.2. NNN - Unique serial number for the ECP;

6.1.7.2. Type – P (Preliminary) or F (Final);

6.1.7.3. Revision – Enter revision indicator to identify version; and

6.1.7.4. SYSTEM DESIGNATION – Identify and describe the system/sub-system affected by the ECP. Include reference to affected configuration identifier(s).

6.1.8. **Block 7.**

6.1.8.1. The Contractor must list all specifications affected by the ECP.

6.1.8.2. The Contractor must list all documents affected by the ECP.

6.1.8.3. The Contractor must submit copes of the affected specifications and documents with the ECP.

6.1.9. **Block 8.**

6.1.9.1. The Contractor must list all drawings affected by the change.

6.1.9.2. The Contractor must submit copes of the affected drawings with the ECP.

6.1.10. **Block 9.** The Contractor must enter a brief title that identifies the ECP.

6.1.11. **Block 10.**

6.1.11.1. The Contractor must describe the engineering change.

6.1.11.2. Supplementary information may be attached to the ECP to describe the proposed change.

6.1.12. **Block 11.**

6.1.12.1. The Contractor must explain the need for the engineering change.

6.1.12.2. The Contractor must explain the benefit to Canada such as enhanced performance, range, reliability or maintainability.

6.1.13. **Block 12.**

6.1.13.1. The Contractor must state the contract number affected by the ECP.

6.1.13.2. The Contractor must identify the contract line item number affected by the proposed engineering change.

6.1.14. **Block 13.**

6.1.14.1. The Contractor must indicate the estimated date when change can be incorporated into production.

6.1.14.2. The Contractor must indicate the planned serial number or lot number upon which the change will be implemented.

6.1.15. **Block 14.**

6.1.15.1. The Contractor must provide the delivery schedule of items incorporating the engineering change.

6.1.15.2. The Contractor must identify if the change is a variance from the current established production and delivery schedule.

6.1.16. **Block 15.**

6.1.16.1. Block 15a. The Contractor must indicate the lot numbers or serial numbers to be retrofitted as a result of the change.

6.1.16.2. Block 15b. The Contractor must enter details of delivery schedule, quantities and locations for completing the retrofit as a result of the change.

6.1.17. **Block 16.** The Contractor must estimate the total cost or savings that results if the ECP is approved.

6.1.18. **Block 17.** The Contractor must identify which configuration items (CI) will change as a result of the ECP's approval.

6.1.19. **Block 18.** The Contractor must indicate which other CI will be affected by the ECP's approval.

6.1.20. **Block 19.** The Contractor must state whether other contractors or Government activities will be affected by the ECP.

6.1.21. **Block 20.**

6.1.21.1. The Contractor must describe the performance change that results if the ECP is approved.

6.1.21.2. The Contractor must describe the impact upon performance specifications, including the defined functional and physical interfaces, which would be affected by the ECP.

6.1.22. **Block 21.** The Contractor must describe other effects, such as the effect upon health and safety, if the ECP is approved.

6.1.23. **Block 22.** The Contractor must describe effects of the proposed change upon performance in quantitative terms as it relates to the defence system and CI specifications.

6.1.24. **Block 23.**

6.1.24.1. The Contractor must print the name of the individual authorized to submit the ECP.

6.1.24.2. The Contractors' authorized individual must sign and date the ECP.

6.1.25. **Block 24.**

6.1.25.1. The Contractor must indicate the effects of the proposed engineering change upon configuration identification and contract reference by checking the corresponding box at 24a through 24e.

6.1.25.2. The Contractor must describe the effects upon the product configuration identification and contract specifications with reference to Specification Change Notices, Notices of Revision (NORs) or other enclosure(s).

6.1.25.3. The Contractor must identify the enclosures and their relevant paragraph numbers within the space adjacent to blocks 24a through 24e.

6.1.26. **Block 25.**

6.1.26.1. The Contractor must indicate the effects of the proposed engineering change upon operational employment by checking the corresponding boxes at blocks 25a through 26j.

6.1.26.2. The Contractor must explain these effects within enclosures.

6.1.26.3. The Contractor must identify the enclosures and their relevant paragraph numbers within the space adjacent to blocks 25a through 25j.

6.1.26.4. The Contractor must use quantitative values when reliability and service life are affected. Survivability includes nuclear survivability.

6.1.27. **Block 26.**

6.1.27.1. The Contractor must indicate the effects of the proposed engineering change upon Integrated Logistics Support (ILS) by checking the corresponding boxes at blocks 26a through 26n.

6.1.27.2. The Contractor must explain these effects within enclosures.

6.1.27.3. The Contractor must identify the enclosures and their relevant paragraph numbers within the space adjacent to blocks 26a through 26n.

6.1.27.4. The Contractor must indicate the method used to determine ILS plans and items required for the support of the new configuration.

6.1.28. **Block 27.**

6.1.28.1. The Contractor must indicate other considerations of the proposed engineering change by checking the boxes at blocks 27a through 27i.

6.1.28.2. The Contractor must explain the effects within enclosures.

6.1.28.3. The Contractor must identify the enclosures and their relevant paragraph numbers within the space adjacent to blocks 27a through 27i.

6.1.29. **Block 28.**

6.1.29.1. The Contractor must summarize the alternative solutions considered such as revisions of operation, maintenance procedures, inspections, servicing requirements or part replacement schedules.

6.1.29.2. The Contractor must provide an analysis of the alternatives, identify the advantages and disadvantages inherent to each alternative.

6.1.29.3. The Contractor must present supporting data with the proposal to authenticate the trade-off analysis if the analysis addresses new concepts or new technology.

6.1.29.4. The Contractor shows the reasons for adopting the alternative proposed by the ECP.

6.1.30. **Block 29.**

6.1.30.1. The Contractor must recommend additional tests, trials, installations, prototypes, fit checks, or other verification that prove the proposed engineering change performs as expected.

6.1.30.2. The Contractor must recommend the test objective, test vehicle(s) and GFE to be used for the verification.

6.1.31. **Block 30.**

6.1.31.1. The Contractor must recommend whether or not to retrofit the engineering change into accepted items.

6.1.31.2. The Contractor must substantiate the retrofit recommendation with data and a brief description of the action required.

6.1.32. **Block 31.** The Contractor must show the work-hours, material costs and subcontract costs to retrofit the defence system.

6.1.33. **Block 32**. The Contractor must show the work-hours required to test the defence system following retrofit.

6.1.34. **Block 33.** The Contractor must state whether to incorporate the proposed change before, after or concurrently with other approved engineering changes.

6.1.35. **Block 34.**

6.1.35.1. The Contractor must indicate whether one or more Contractor field service representatives (FSR) are required for the retrofit.

6.1.35.2. If “yes” to FSR, then the Contractor must attach a proposed program for Contractor participation.

6.1.36. **Block 35.** The Contractor must estimate the total time period a defence system must be removed from operational service for the retrofit.

6.1.37. **Block 36.**

6.1.37.1. The Contractor must summarize the cumulative effect upon performance of this ECP and previously approved ECPs when design limitations are being approached or exceeded.

6.1.37.2. Consequences of ECP disapproval may be stated within Block 36 or within a referenced enclosure.

6.1.38. **Block 37.** The Contractor must request a date for approval by the contracting authority to implement the change.

6.2. **SOFT COPY FORMAT**

6.2.1. The ECP must be submitted as a PDF file type.

6.2.2. The ECP PDF must be submitted via email (submission size not to exceed 7MB) as follows:

6.2.2.1. To Field: As per the related CDRL section 9.A. Addressee, as identified in the contract.

6.2.2.2. Subject Field: WTS-SE-105 – ECP – [Rev #] – [Date of Issue]

ENGINEERING CHANGE PROPOSAL (ECP)

1. DATE (*YY/MM/DD*)

2. ORIGINATOR NAME AND ADDRESS

3. CLASS OF ECP (I or II)	4. CLASSIFICATION CODE (Applicable to Class I Only)	5. PRIORITY

6. ECP DESIGNATION

No.	Type	Revision

SYSTEM DESIGNATION:

7. SPECIFICATIONS / DOCUMENTS AFFECTED			8. DRAWINGS AFFECTED		
Spec/Doc No.	Title	Rev	Dwg No.	Title	REV

9. TITLE OF CHANGE

10. DESCRIPTION OF CHANGE

11. NEED FOR CHANGE

12. CONTRACT NUMBER AND LINE ITEMS

13. PRODUCTION EFFECTIVITY	14. EFFECT UPON PRODUCTION DELIVERY SCHEDULE

15. RETROFIT

15a. RECOMMENDED ITEM EFFECTIVITY	15b. ESTIMATED KIT DELIVERY SCHEDULE / LOCATIONS

16. ESTIMATED COSTS / SAVINGS UNDER CONTRACT

IMPACT ANALYSIS / EFFECTS
17. ITEMS / SYSTEMS DIRECTLY AFFECTED
18. OTHER SYSTEMS AFFECTED
19. OTHER CONTRACTORS / ACTIVITIES AFFECTED
20. EFFECTS UPON PERFORMANCE / SYSTEM SPECIFICATIONS
21. EFFECTS UPON EMPLOYMENT, INTEGRATED LOGISTICS SUPPORT, TRAINING, OPERATIONAL EFFECTIVENESS, ENVIRONMENT, HEALTH & SAFETY (EHS) OR SOFTWARE
22. EFFECTS UPON ITEM SPECIFICATIONS
23. SUBMITTING ACTIVITY – Authorized Signature (Print Name and Sign) Date

`EFFECTS UPON PRODUCT CONFIGURATION IDENTIFICATION, LOGISTICS AND OPERATIONS							
(X)	FACTOR	ENCL	PAR	(X)	FACTOR	ENCL	PAR
	24. EFFECT UPON PRODUCT CONFIGURATION IDENTIFICATION OR CONTRACT				**25. EFFECT UPON OPERATIONAL EMPLOYMENT**		
	a. PERFORMANCE				a. SAFETY		
	b. WEIGHT BALANCE STABILITY (*Aircraft*)				b. SURVIVABILITY		
	c. WEIGHT-MOMENT (*Other Equipment*)				c. RELIABILITY		
	d. CDRL, TECHNICAL DATA				d. MAINTAINABILITY		
	e. NOMENCLATURE				e. SERVICE LIFE		
					f. OPERATING PROCEDURES		
	26. EFFECT UPON INTEGRATED LOGISTICS SUPPORT (ILS) ELEMENTS				g. ELECTROMAGNETIC INTERFERENCE		
					h. ACTIVATION SCHEDULE		
	a. ILS PLANS				i CRITICAL SINGLE POINT FAILURE ITEMS		
	b. MAINTENANCE CONCEPT, PLANS AND PROCEDURES				j. INTEROPERABILITY		
	c. LOGISTICS SUPPORT ANALYSIS						
	d. INTERIM SUPPORT PROGRAMS						
	e. SPARES AND REPAIR PARTS				**27. OTHER CONSIDERATIONS**		
	f. TECH MANUALS/PROGRAMMING TAPES				a. INTERFACE		
	g. FACILITIES				b. OTHER AFFECTED EQUIPMENT/GFE/ GFI		
	h. SUPPORT EQUIPMENT				c. PHYSICAL CONSTRAINTS		
	i. OPERATOR TRAINING				d. COMPUTER PROGRAMS AND RESOURCES		
	j. OPERATOR TRAINING EQUIPMENT				e. REWORK OF OTHER EQUIPMENT		
	k. MAINTENANCE TRAINING				f. SYSTEM TEST PROCEDURES		
	l. MAINTENANCE TRAINING EQUIPMENT				g. WARRANTY/GUARANTEE		
	m. CONTRACT MAINTENANCE				h. PARTS CONTROL		
	n. PACKAGING, HANDLING, STORAGE, TRANSPORTABILITY				i. LIFE CYCLE COSTS		

28. ALTERNATE SOLUTIONS

29. DEVELOPMENTAL STATUS

30. RECOMMENDATIONS FOR RETROFIT

31. WORK-HOURS, MATERIAL COSTS AND SUBCONTRACT COSTS PER UNIT TO INSTALL RETROFIT KITS

a. WORK HOURS	b. MATERIAL COSTS	c. SUBCONTRACT COSTS

32. WORK-HOURS TO CONDUCT SYSTEM TESTS AFTER RETROFIT

33. THIS CHANGE MUST BE ACCOMPLISHED

☐ BEFORE ☐ WITH ☐ AFTER THE FOLLOWING CHANGES

34. IS CONTRACTOR FIELD SERVICE REPRESENATIVE REQUIRED?

☐ YES ☐ NO

35. OUT OF SERVICE TIME

36. EFFECT OF THIS ECP AND PREVIOUSLY APPROVED ECPs UPON ITEM

37. DATE CONTRACTUAL AUTHORITY NEEDED

A3.14 DID – Configuration Status Accounting Report

DATA ITEM DESCRIPTION	
1. TITLE **Configuration Status Accounting (CSA) Report**	2. IDENTIFICATION NUMBER DID WTS-SE-106
3. DESCRIPTION The CSA Report provides details about the current Configuration Items (CIs), including existing CIs and those being developed under the Contract; documentation and identification numbers relating to those CIs, and changes to the items and their configuration documentation	
4. RELATED DOCUMENTS **ANSI/EIA-649-C** – *Configuration Management Standard*	5. CONTRACT REFERENCE SOW: **Para. 5.5.2 (pg. 28)** CDRL: **App. A2.14 (pg.129)**

6. PREPARATION INSTRUCTIONS

6.1. **CONTENT**

6.1.1. The CSA Report must include data from the CSA system, including:

6.1.1.1. the identification of the currently approved configuration documentation and configuration identifiers associated with each CI;

6.1.1.2. the status of proposed engineering changes from initiation to implementation;

6.1.1.3. the status and disposition of discrepancies from configuration audits;

6.1.1.4. the status of applications / requests for deviations and waivers;

6.1.1.5. the ability to trace changes from the baseline documentation of each CI; and

6.1.1.6. the effectiveness and installation status of configuration changes to all CIs at all locations.

6.1.2. **Indentured Item List**

6.1.2.1. For each CI, the CSA Report must include an Indentured Item List that illustrates the breakdown structure of subordinate CIs, parts, assemblies, sub-assemblies and Software, such that the relationships (e.g. where used, next higher assembly) within the product breakdown structure can be clearly understood.

6.1.2.2. The Indentured Item List must, for each item in the product breakdown structure, include:

6.1.2.2.1. the configuration identifier / product identifier / Unique Item Identifier (UII);

6.1.2.2.2. the nature of the CI (i.e. system, hardware, software);

6.1.2.2.3. the manufacturer's Enterprise Identifier (e.g. Commercial and Government Entity (CAGE) code);

6.1.2.2.4. the manufacturer's reference number / part number for the item;

6.1.2.2.5. an Effectivity identifier, such as a version number, useable on code or other, used to designate that a CI is useable on one or more higher-level CIs or end items; and

6.1.2.2.6. the name of the CI, part, component, assembly or Software item, as applicable.

6.1.2.3. The product hierarchy in the Indentured Item List must be described to a level of detail that provides the DND with sufficient understanding of the evolving solution and to meet life cycle support concepts, supportability and other goals under the Contact.

6.1.3. **Functional Baseline Report**

6.1.3.1. The CSA Report must include Functional Baseline Reports that list the configuration documentation used to define the FBL for each CI including:

6.1.3.1.1. requirements specifications (functional, interoperability and interface characteristics and design constraints);

6.1.3.1.2. external interface definition documentation; and

6.1.3.1.3. agreed Verification documentation required to demonstrate the CI's characteristics.

6.1.4. **Product Baseline Report**

6.1.4.1. The CSA Report must include Product Baseline Reports that list the configuration documentation or other information artefacts used to define the PBL for each CI, and which include the following types of documentation:

6.1.4.1.1. specifications for the system and subordinate CIs including both hardware and software CIs;

6.1.4.1.2. interface control documents;

6.1.4.1.3. engineering and manufacturing drawings and associated lists (e.g. bill of materials, wiring lists, assembly drawings, item quantities);

6.1.4.1.4. design documentation (including, as applicable, software and firmware source code, and system, hardware, software and firmware design documentation);

6.1.4.1.5. computer aided design, simulation and modelling files;

6.1.4.1.6. Verification plans, procedures and reports;

6.1.4.1.7. audit reports, certifications and associated action items;

6.1.4.1.8. Engineering Change Proposals (ECPs) and requests for deviations/waivers ;

6.1.4.1.9. operation and maintenance manuals;

6.1.4.1.10. recommended spares and support and test equipment; and

6.1.4.1.11. associated Training materials.

6.1.4.2. Configuration documentation for the Product Baseline Report must be identified to a level of detail commensurate with the expected Defence activities and support strategy for the product.

6.2. **SOFT COPY FORMAT**

6.2.1. The CSA Report must be submitted as a PDF file type.

6.2.2. **Soft Copy format submission size below 7MB** – The CSA Report may be submitted via email as follows:

6.2.2.1. To Field: As per the related CDRL section 9.A. Addressee, as identified in the contract.

6.2.2.2. Subject Field: WTS-SE-106 – CSA Report – [Rev #] – [Date of Issue]

6.2.3. **Soft Copy format submission size at or above 7MB** - The CSA Report must be submitted on CD or DVD media and be labelled as follows:

6.2.3.1. Water Treatment System

6.2.3.2. CSA Report;

6.2.3.3. WTS-SE-106;

6.2.3.4. The Revision number, and

6.2.3.5. The date of issue.

A3.15 DID – Acceptance Test Plan and Procedures

DATA ITEM DESCRIPTION	
1. TITLE **Acceptance Test Plan and Procedures (ATP&P)**	2. IDENTIFICATION NUMBER DID WTS-SE-107
3. DESCRIPTION The ATP&P describes the organisations, schedule, responsibilities, procedures and other details that are necessary for the conduct of the test program, as required under the contract and the approved governing plan for Verification. The activities defined by the ATP&P are used to confirm the quality of the Supplies and that the Contract requirements have been met.	
4. RELATED DOCUMENTS	5. CONTRACT REFERENCE SOW: **Para.6.1.1.2 (pg. 30)** CDRL: **App. A2.15 (pg. 130)**

6. PREPARATION INSTRUCTIONS

6.1. **CONTENT**

6.1.1. **Detailed Requirements – Plan**

6.1.1.1. The ATP&P must separately identify each requirement, and in respect of each requirement:

6.1.1.1.1. provide a summary description of the test, including the organisation(s) involved in the test and the responsibilities of key individuals;

6.1.1.1.2. reference the RTVM entries that detail which requirements are being tested, and whether Verification of a requirement will be established by the test;

6.1.1.1.3. provide a description of the test article, including test configuration identification;

6.1.1.1.4. detail system configuration and initial conditions for test;

6.1.1.1.5. identify any limitations, assumptions and constraints associated with the Verification activity, including any measurements that need to be taken at the time of the Verification activity to record uncontrollable conditions (e.g. ambient temperature);

6.1.1.1.6. identify any location or environmental considerations for the conduct of the Verification activities;

6.1.1.1.7. state the means, or combination of means, which will be used to Verify compliance with the requirement, for example, stand-alone system, integration test;

6.1.1.1.8. identify, with respect to the means stated in 6.1.1.1.7 above, whether the Verification of the requirement will be fully established by either a discrete test, as part of a test of the complete functioning system, or both;

6.1.1.1.9. identify the precursor test activities and the immediate successor test activities covered by a separate ATP&P, as applicable;

6.1.1.1.10. identify the subordinate test procedures that describe the test steps for each test case listed in the ATP&P; and

6.1.1.1.11. include details of the test organisation and the significant test equipment, documentation and facilities required for the conduct of the Verification activity, with cross-references to the applicable test procedures for additional detail.

6.1.1.2. The ATP&P must define the procedures to be undertaken when a test result indicates that the test article has failed, and to provide traceability of any investigation or technical follow-up, corrective actions, and retest / regression testing, to maintain the integrity of the final results and reports.

6.1.1.3. The ATP&P must list those Acceptance Test Reports (ATRs) that are generated by the ATP&P.

6.1.1.4. The ATP&P must reference the RTVM that provides traceability of each requirement to test item and test procedures that will verify satisfactory compliance.

6.1.2. **Detailed Requirements – Procedures**

6.1.2.1. For each test procedure identified under 6.1.1.1.10 above, the ATP&P must include, using separate annexes for each procedure:

6.1.2.1.1. a description of the scope of the test, including a test method, which must provide a general description of the test activity;

6.1.2.1.2. a description of the configuration of the item(s) under test and initial conditions for test, including any preparatory requirements or other pre-test activities;

6.1.2.1.3. a description of the test equipment (including the configuration of test equipment), documentation (including details of calibration and certification of test equipment if required), venue and personnel required for the conduct of the test;

6.1.2.1.4. all safety precautions necessary for the performance of the test procedure;

6.1.2.1.5. a description of any data inputs or data files required for the conduct of the test; and

6.1.2.1.6. step-by-step procedures for the performance of the test, in sufficient detail to identify every action necessary for the conduct of the test, including:

6.1.2.1.6.1. pre-test actions;

6.1.2.1.6.2. any notes, cautions or warnings that are necessary at each stage of the test procedure;

6.1.2.1.6.3. required operator test input;

6.1.2.1.6.4. expected outcomes or results;

6.1.2.1.6.5. space for recording actual results;

6.1.2.1.6.6. space for comments;

6.1.2.1.6.7. a block for sign-off signatures for all parties present at the test;

6.1.2.1.6.8. a space for recording the configuration of the item(s) under test, including all major hardware and software Configuration Items;

6.1.2.1.6.9. a space for recording all test equipment utilised and the calibration date of the equipment;

6.1.2.1.6.10. if applicable, a space for recording details of test-recording media that will support test analysis; and

6.1.2.1.6.11. a space for recording any post-test actions.

6.1.2.2. In conjunction with each test step, the test procedure must define what measurements, readings, or observations are required for a correct response.

6.1.2.3. As part of the test assessment data, PASS/FAIL criteria or the expected qualitative or quantitative result must also be defined.

6.1.2.4. Where a quantitative result is declared, this must include the allowable tolerance.

6.1.2.5. Where a qualitative result is declared, this must include a description of the expected results of the test.

6.2. **SOFT COPY FORMAT**

6.2.1. The ATP&P must be submitted as a PDF file type.

6.2.2. **Soft Copy format submission size below 7MB** – The ATP&P may be submitted via email as follows:

6.2.2.1. To Field: As per the related CDRL section 9.A. Addressee, as identified in the contract.

6.2.2.2. Subject Field: WTS-SE-107 – ATP&P – [Rev #] – [Date of Issue]

6.2.3. **Soft Copy format submission size at or above 7MB** - The ATP&P must be submitted on CD or DVD media and be labelled as follows:

6.2.3.1. Water Treatment System

6.2.3.2. ATP&P;

6.2.3.3. WTS-SE-107;

6.2.3.4. The Revision number, and

6.2.3.5. The date of issue.

A3.16 DID – Acceptance Test Report

DATA ITEM DESCRIPTION	
1. TITLE **Acceptance Test Report (ATR)**	2. IDENTIFICATION NUMBER DID WTS-SE-108
3. DESCRIPTION The ATR is used to document the results of the system test activity. In particular, the ATR formally documents the results, conclusions and recommendations of testing conducted according to the governing plan for Verification (e.g. SEMP) and associated Acceptance Test Plan and Procedures (ATP&Ps).	
4. RELATED DOCUMENTS	5. CONTRACT REFERENCE SOW: **Para. 6.2.1.4 (pg. 34)** CDRL: **App. A2.16 (pg.131)**

6. PREPARATION INSTRUCTIONS

6.1. **CONTENT**

6.1.1. The ATR must include:

6.1.1.1. data to uniquely identify the Supplies being Verified, which may include:

6.1.1.1.1. item names;

6.1.1.1.2. stock numbers;

6.1.1.1.3. part numbers;

6.1.1.1.4. item quantity;

6.1.1.1.5. serial numbers; and

6.1.1.1.6. configuration status;

6.1.2. references to relevant ATP&P and details of any differences between the ATP&P and the 'as run' test procedure;

6.1.3. reports of the relevant verification results, supported by the applicable raw results / measurement data, calculations, etc., as attachments;

6.1.4. reports on any corrective action found necessary as a result of verification activities, and of any subsequent re-verification activities required; and

6.1.5. names of the DND representative(s) who witnessed the verification activities, or reference to the authority given to conduct the verification activities without a DND presence.

6.2. **SOFT COPY FORMAT**

6.2.1. The ATR must be submitted as a PDF file type.

6.2.2. **Soft Copy format submission size below 7MB** – The ATR may be submitted via email as follows:

6.2.2.1. To Field: As per the related CDRL section 9.A. Addressee, as identified in the contract.

6.2.2.2. Subject Field: WTS-SE-108 – ATR – [Rev #] – [Date of Issue]

6.2.3. **Soft Copy format submission size at or above 7MB -** The ATR must be submitted on CD or DVD media and be labelled as follows:

6.2.3.1. Water Treatment System

6.2.3.2. ATR;

6.2.3.3. WTS-SE-108;

6.2.3.4. The Revision number, and

6.2.3.5. The date of issue.

A3.17 **DID – Top Level Assembly Drawing**

DATA ITEM DESCRIPTION	
1. TITLE **Top Level Assembly Drawing**	2. IDENTIFICATION NUMBER DID WTS-ILS-201
3. DESCRIPTION The Top Level Assembly Drawing (TLAD) describes the assembled relationship of all the parts of the system.	
4. RELATED DOCUMENTS **D-01-400-001/SG-000** *Standard - Engineering Drawing Practices* **D-01-400-002/SF-000** *Specification - Levels of Engineering Drawings*	5. CONTRACT REFERENCE SOW: **Para. 3.6.2.2 (pg. 18)** CDRL: **App.A2.17 (pg.132)**

6. PREPARATION INSTRUCTIONS

6.1. **CONTENT**

6.1.1. The TLAD must contain all information necessary to identify all the components of the WTS.

6.2. **GENERAL FORMAT**

6.2.1. The TLAD must be prepared IAW D-01-400-001/SG-000, Engineering Drawing Practices, para 7.4, and D-01-400-002/SF-000: Levels of Engineering Drawings, para 3.3.2 (Level 2).

6.3. **HARD COPY FORMAT**

6.3.1. The TLAD must be printed on paper with these characteristics:

6.3.1.1. Standard US Ledger size (432 mm x 279 mm)

6.3.1.2. Weight of no less than 90 gsm;

6.3.1.3. Brightness of no less than 92 ISO brightness;

6.4. **SOFT COPY FORMAT**

6.4.1. The TLAD must be submitted as a PDF file type, and match the printed format and layout.

6.4.2. Viewing the PDF version: pages, regardless of size, containing text and illustrations in landscape, must be rotated for electronic viewing and reading in landscape.

6.4.3. **Soft Copy format submission size below 7MB** – The TLAD PDF may be submitted via email as follows:

6.4.3.1. To Field: As per the related CDRL section 9.A. Addressee, as identified in the contract.

6.4.3.2. Subject Field: WTS-ILS-201 – TLAD – [Rev #] – [Date of Issue]

6.4.4. **Soft Copy format submission size at or above 7MB -** The TLAD PDF must be submitted on CD or DVD media and be labelled as follows:

6.4.4.1. Water Treatment System

6.4.4.2. TLAD;

6.4.4.3. WTS-ILS-201;

6.4.4.4. The Revision number, and

6.4.4.5. The date of issue.

A3.18 DID – WTS Operator Manual

DATA ITEM DESCRIPTION	
1. TITLE **WTS Operator Manual**	2. IDENTIFICATION NUMBER DID WTS-ILS-202
3. DESCRIPTION The WTS Operator Manual contains all the essential information required to describe the safe and correct operative procedures and operator maintenance associated with the equipment.	
4. RELATED DOCUMENTS **C-01-100-100/AG-008** *Writer's Guide for Technical Documentation*	5. CONTRACT REFERENCE SOW: **Para 8.3.1.1.1 (pg. 44)** CDRL: **App. A2.18 (pg. 133)**

6 PREPARATION INSTRUCTIONS

6.1 **CONTENT**

6.1.1 The WTS Operator Manual must cover the following topics, and others judged pertinent by the Contractor:

6.1.1.1 General Description/Equipment Overview, divided by CI;

6.1.1.2 Pre-use testing/inspection;

6.1.1.3 Preparation and set up for use, assuming a start state of a towing Prime Mover arriving at a staging site;

6.1.1.4 Use and operation to cover the following scenarios:

6.1.1.4.1 The WTU mounted on the Trailer;

6.1.1.4.2 The WTU at ground level;

6.1.1.4.3 The WTU and the ASU equipment in both of the above scenarios; and,

6.1.1.4.4 The WTS Trailer used as a general purpose Trailer (loading and lashing limitations, etc.) in a separate section.

6.1.1.5 Equipment stowage and preparation for travel, from an operating state to the towing Prime mover being ready to leave the area.

6.1.1.6 Operator fault-finding and maintenance, IAW the Maintenance Concept paragraph 8.1 (pg. 43);

6.1.1.7 Shut-down and post-shut-down actions and precautions;

6.1.1.8 Safety/Hazardous material issues;

6.1.2 The WTS Operator Manual material covered in 6.1.1 above, must be amplified by illustrations, line drawings, and high quality colour pictures.

6.1.3 As the ASU will be used only occasionally, where applicable and practicable, the Operator Manual's text must contain references to allow the User to quickly skip information and instructions specific to the ASU as they are moving through the manual (example: "If not using the ASU, go to paragraph 4.5.3"). The intent is to prevent the User from moving back and forth within the manual, instead allowing the User to proceed forward more quickly in the manual when not using the ASU.

6.2 **GENERAL FORMAT**

6.2.1 The WTS Operator Manual must be prepared in the Contractor's format while being in full conformance with the above-stated issue of C-01-100-100/AG-008.

6.2.2 The WTS Operator Manual must include the National Defence Index of Documentation (NDID) number (provided to the Contractor by DND) that must be placed on the top right corner of all the pages of the manual.

6.3 **HARD COPY FORMAT**

6.3.1 The accepted WTS Operator Manual hard copies must be:

6.3.1.1 Printed on paper with these characteristics:

6.3.1.1.1 Standard US Letter Size (270 mm x 216 mm);

6.3.1.1.2 Covers: 320-370 gsm polyester film (such as Pico Film), matt surface and white;

6.3.1.1.3 Pages: 90-150 gsm polyester film (such as Pico Film), matt surface and white.

6.3.1.2 Bound using white or black spiral Polyvinylchloride (PVC) coil.

6.4 **SOFT COPY FORMAT**

6.4.1 The WTS Operator Manual must be provided as both MS Word and PDF file formats with searchable text that matches the printed publication's format and layout. Links, bookmarks and thumbnails are to be included in the PDF file. All references made to a specific paragraph, figure, appendix must be appropriately linked.

6.4.2 Viewing the WTS Operator Manual PDF: pages, regardless of size, containing text and illustrations in landscape, must be rotated for electronic viewing and reading in landscape.

6.4.3 **Soft Copy format submission size below 7MB** – The WTS Operator Manual PDF and its native file may be submitted via email as follows:

6.4.3.1 To Field: As per the related CDRL section 9.A. Addressee, as identified in the contract.

6.4.3.2 Subject Field: WTS-ILS-202 – WTS Operator Manual – [Rev #] – [Date of Issue]

6.4.4 **Soft Copy format submission size at or above 7MB -** The WTS Operator Manual PDF and its native file must be submitted on CD or DVD media and be labelled as follows:

6.4.4.1 Water Treatment System

6.4.4.2 WTS Operator Manual;

6.4.4.3 WTS-ILS-202;

6.4.4.4 The Revision number, and

6.4.4.5 The date of issue.

A3.19 DID – WTU Operator Quick Reference Card

DATA ITEM DESCRIPTION	
1. TITLE **WTU Operator Quick Reference Card**	2. IDENTIFICATION NUMBER DID WTS-ILS-203
3. DESCRIPTION WTU Operator Quick Reference Card (OQRC) will allow the trained user to quickly unpack, assemble, and safely use the equipment.	
4. RELATED DOCUMENTS	5. CONTRACT REFERENCE SOW: **Para 8.3.1.2.1 (pg.44)** CDRL: **App. A2.19 (pg.134)**

6. PREPARATION INSTRUCTIONS

6.1. **CONTENT**

6.1.1. The OQRC must contain the necessary instructions to allow a trained user to quickly, safely and effectively operate the WTU in any filtration process mode.

6.1.2. The OQRC must assume that the WTU's initial state is: staged, either on or off the WTS Trailer.

6.1.3. The OQRC instructions must be based on pictograms illustrating the sequence of steps required while using only minimal text to assist in the understanding of the document. Desired look and feel would be similar to commercial airline safety pamphlets describing the use of oxygen masks, and emergency exits.

6.1.4. The OQRC must not introduce new information and procedures not also described in the WTS Operator Manual, as the WTS Operator Manual is the master document on how to use the equipment.

6.1.5. The OQRC must contain a Cautionary Advisory with the appropriate safety heading:

6.1.5.1. The OQRC Cautionary Advisory's heading must be determined based on the criteria set out in ANNEX A1 SOW Paragraph 8.3.3.1.

6.1.5.2. The OQRC Cautionary Advisory must read: "**This WTU Operator Quick Reference Card is intended solely for experienced users who have been trained on this equipment, and have read and understood its WTS Operator Manual** (CFTO# to be supplied by DND). **When in doubt, read the WTS Operator Manual before operating this equipment**."

6.1.5.3. The OQRC cautionary advisory must also have, immediately following this text, a brief description of the consequences of misuse of the equipment, linked to the same criteria listed in 6.1.5.1 above.

6.2. **HARD COPY FORMAT**

6.2.1. The accepted OQRC hard copies must:

6.2.1.1. Be printed on paper with pages of 320-370 gsm polyester film (such as Pico Film), matt surface and white colour;

6.2.1.2. Be bound with white or black spiral PVC coil (such as PLASTIKOIL®);

6.2.1.3. Contain no more than six (6) sheets of standard US Letter size (270 mm x 216 mm);

6.2.1.4. Be produced and printed exclusively in black and white (for legibility in black-out mode).

6.3. **SOFT COPY FORMAT**

6.3.1. The OQRC must be provided as a PDF file with searchable text that matches the printed publication's format and layout. Links, bookmarks and thumbnails are to be included in the PDF file.

6.3.2. Viewing the OQRC PDF: pages, regardless of size, containing text and illustrations in landscape, must be rotated for electronic viewing and reading in landscape.

6.3.3. **Soft Copy format submission size below 7MB** – The OQRC PDF and its native file may be submitted via email as follows:

6.3.3.1. To Field: As per the related CDRL section 9.A. Addressee, as identified in the contract.
6.3.3.2. Subject Field: WTS-ILS-203 – OQRC – [Rev #] – [Date of Issue]

6.3.4. **Soft Copy format submission size at or above 7MB -** The OQRC PDF and its native file must be submitted on CD or DVD media and be labelled as follows:

6.3.4.1. Water Treatment System
6.3.4.2. OQRC;
6.3.4.3. WTS-ILS-203;
6.3.4.4. The Revision number, and
6.3.4.5. The date of issue.

A3.20 **DID – WTS Maintenance Manual**

DATA ITEM DESCRIPTION	
1. TITLE **WTS Maintenance Manual**	2. IDENTIFICATION NUMBER DID WTS-ILS-204
3. DESCRIPTION The WTS Maintenance Manual contains all the information required by the Technician to perform preventative and corrective maintenance procedures and troubleshooting of the equipment.	
4. RELATED DOCUMENTS **D-01-100-204/SF-000** *Preparation of Preventive Maintenance Instructions* **D-01-100-205/SF-000** *Preparation of Corrective Maintenance Instructions* **C-01-100-100/AG-008** *Writer's Guide for Technical Documentation*	5. CONTRACT REFERENCE SOW: **Para 8.3.1.3.1 (pg. 44)** CDRL: **App. A2.20 (pg.135)**

6. PREPARATION INSTRUCTIONS

6.1. **CONTENT**

6.1.1. The WTS Maintenance Manual must provide descriptive essential, preventive and corrective maintenance information on all components, groups of equipment and systems IAW the Maintenance Concept, Paragraph 8.1.2.2 (pg. 43).

6.1.2. Information generated from 6.1.1 above must be sorted and divided by main assembly (WTU, Trailer, MEU and ASU), and then IAW D-01-100-204/SF-001 and IAW D-01-100-205/SF-001 within the main assembly's section.

6.1.3. The WTS Maintenance Manual text must be amplified by comprehensive system or component illustrations, good quality color pictures, pictograms and schematics.

6.2. **GENERAL FORMAT**

6.2.1. The WTS Maintenance Manual must be prepared in the Contractor's format and be in full conformance with the current issue of C-01-100-100/AG-008, D-01-100-204/SF-000 and D-01-100-205/SF-000.

6.2.2. The WTS Maintenance Manual must include the National Defence Index of Documentation (NDID) number (provided to the Contractor by DND) that must be placed on the right top corner of all the pages of the manual.

6.2.3. The WTS Maintenance Manual must use illustrations, good quality color pictures and pictograms as appropriate to enable Technicians.

6.3. **HARD COPY FORMAT**

6.3.1. The accepted WTS Maintenance Manual hard copies must be:

6.3.1.1. Printed on paper with these characteristics:

6.3.1.1.1. Standard US Letter Size (216 mm x 270 mm);

6.3.1.1.2. Covers: 320-370 gsm polyester film (such as Pico Film), matt surface and white;

6.3.1.1.3. Pages: 90-150 gsm polyester film (such as Pico Film), matt surface and white;

6.3.1.2. Bound with white or black spiral PVC coil (such as such as PLASTIKOIL®)

6.4. **SOFT COPY FORMAT**

6.4.1. The WTS Maintenance Manual soft copy format must meet the following:

6.4.1.1. Be submitted as PDF and its native file and match the printed publication's format and layout. Links, bookmarks, and thumbnails are to be included in the PDF file.

6.4.1.2. All references made to a specific paragraph, figure, appendix must be appropriately linked.

6.4.1.3. Viewing the files: pages, regardless of size, containing text and illustrations in landscape, must be rotated for electronic viewing and reading in landscape.

6.4.2. **Soft Copy format submission size below 7MB** – The WTS Maintenance Manual PDF and its native file may be submitted via email as follows:

6.4.2.1. To Field: As per the related CDRL section 9.A. Addressee, as identified in the contract.

6.4.2.2. Subject Field: WTS-ILS-204 – WTS Maintenance Manual – [Rev #] – [Date of Issue]

6.4.3. **Soft Copy format submission size at or above 7MB** - The WTS Maintenance Manual PDF and its native file must be submitted on CD or DVD media and be labelled as follows:

6.4.3.1. Water Treatment System

6.4.3.2. WTS Maintenance Manual;

6.4.3.3. WTS-ILS-204;

6.4.3.4. The Revision number, and

6.4.3.5. The date of issue.

A3.21 DID – WTS Permissive Repair Schedule and Standard Repair Times

DATA ITEM DESCRIPTION	
1. TITLE **WTS Permissive Repair Schedule and Standard Repair Times**	2. IDENTIFICATION NUMBER DID WTS-ILS-205
3. DESCRIPTION The WTS Permissive Repair Schedule and Standard Repair Times (PRS & SRT) provides information for maintenance support and planning of the equipment.	
4. RELATED DOCUMENTS **C-04-010-002/AM-000** *Permissive Repair Schedules (PRSs) and Standard Repair Times (SRTs);* **C-04-006-001/AM-001** *Land Maintenance System Lines of Maintenance and Levels of Repair*	5. CONTRACT REFERENCE SOW: **Para 8.3.1.4.1 (pg. 44)** CDRL: **App. A2.21 (pg.136)**

6. PREPARATION INSTRUCTIONS

6.1. **CONTENT**

6.1.1. The PRS & SRT must include a breakdown of all maintenance tasks for Operators and Technicians, IAW the Maintenance Concept (see ANNEX A1, Paragraph 8.1 (pg. 43).

6.1.2. The Levels of Repair and Lines of Maintenance for the PRS & SRT must be determined using the definitions provided in C-04-006-001/AM-001 and in discussions with DND ILS personnel.

6.2. **GENERAL FORMAT**

6.2.1. The PRS & SRT must be prepared in full conformance with C-04-010-002/AM-000;

6.2.2. The PRS & SRT must have the National Defence Index of Documentation (NDID) number (provided to the Contractor by DND) that must be placed on the top right corner of each page.

6.3. **HARD COPY FORMAT**

6.3.1. The PRS & SRT hard copies must be:

6.3.1.1. Printed on paper with these characteristics:

6.3.1.1.1. Standard US Letter Size (270 mm x 216 mm)

6.3.1.1.2. Covers: 320-370 gsm polyester film (such as Pico Film), matt surface and white colour

6.3.1.1.3. Pages: 90-150 gsm polyester film (such as Pico Film), matt surface and white colour

6.3.1.2. Bound with white or black spiral PVC coil (such as PLASTIKOIL®)

6.4. **SOFT COPY FORMAT**

6.4.1. The PRS & SRT must be provided as PDF and native file formats with searchable text that matches the printed publication's format and layout. Links, bookmarks and thumbnails are to be included in the PDF file. All references made to a specific paragraph, figure, appendix must be appropriately linked.

6.4.2. **Soft Copy format submission size below 7MB** – The PRS & SRT PDF and its native file may be submitted via email as follows:

6.4.2.1. To Field: As per the related CDRL section 9.A. Addressee, as identified in the contract.

6.4.2.2. Subject Field: WTS-ILS-205 – PRS & SRT – [Rev #] – [Date of Issue]

6.4.3. **Soft Copy format submission size at or above 7MB** - The PRS & SRT PDF and its native file must be submitted on CD or DVD media and be labelled as follows:

6.4.3.1. Water Treatment System

6.4.3.2. PRS & SRT;

6.4.3.3. WTS-ILS-205;

6.4.3.4. The Revision number, and

6.4.3.5. The date of issue.

A3.22 DID – WTS Illustrated Parts Manual

DATA ITEM DESCRIPTION	
1. TITLE **WTS Illustrated Parts Manual**	2. IDENTIFICATION NUMBER DID WTS-ILS-206
3. DESCRIPTION The WTS Illustrated Parts Manual contains all the necessary information to positively identify all parts of the equipment.	
4. RELATED DOCUMENTS **D-01-100-207/SF-002** *Preparation of Interim WTS Illustrated Parts Manuals for Land Equipment***.**	5. CONTRACT REFERENCE SOW: **Para 8.3.1.5.1 (pg. 45)** CDRL: **App. A2.22 (pg.137)**

6 PREPARATION INSTRUCTIONS

6.1 **CONTENT**

6.1.1 The WTS Illustrated Parts Manual content must be IAW D-01-100-207/SF-002, and the drawings must be sequenced as per the PPB breakdown of assemblies, by level. That is, an illustration showing a B-level assembly must have have all C-level parts identified in that drawing, as practicable. All of the C-level parts from that list that have D-level parts must have their illustrations sequenced as per the PPB, drilling completely through the assemblies before showing the next. See Fig 1 below.

PPB Indention	Serial
A	*1*
B	*2*
C	*3*
C	*4*
D	*5*
D	*6*
C	*7*
D	*8*
D	*9*
B	*10*
C	*11*
C	*12*

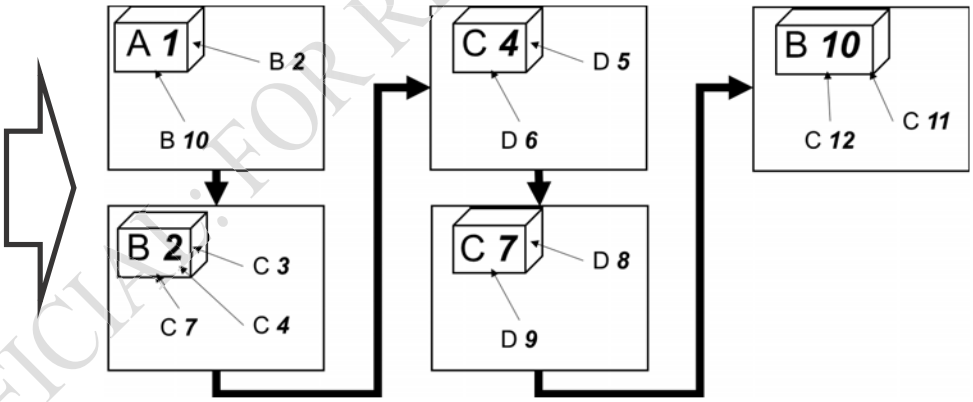

Figure 1. IPM Breakdown Sequence

6.1.2 The WTS Illustrated Parts Manual must contain illustrations, exploded views, and drawings and associated lists necessary for the proper identification of all parts, assemblies, and special equipment to the Lowest Replaceable Unit (LRU).

6.1.3 The exploded views contained in the WTS Illustrated Parts Manual must amplify the relationship between all parts and assemblies to facilitate repair of the equipment and the replacement of parts and assemblies down to the LRU.

6.1.4 The WTS Illustrated Parts Manual must include the National Defence Index of Documentation (NDID) number, provided to the Contractor by DND, which must be placed on the top right corner of each page of the manual.

6.2 **GENERAL FORMAT**

6.2.1 The format of the WTS Illustrated Parts Manual must be IAW D-01-100-207/SF-002, with the exception that “NCAGE” must be used instead of “NSCM” (see DID WTT-ILS-211).

6.2.2 The WTS Illustrated Parts Manual must **not** use photographs as illustrations.

6.3 **HARD COPY FORMAT**

6.3.1 The accepted WTS Illustrated Parts Manual hard copies must be:

6.3.1.1 Printed on paper with these characteristics:

6.3.1.1.1 Standard US Letter Size (216 mm x 270 mm);

6.3.1.1.2 Covers: 320-370 gsm Polyester film, matt surface and white;

6.3.1.1.3 Pages: 90-150 gsm Polyester film, matt surface and white;

6.3.1.2 Bound with white or black spiral PVC coil (such as PLASTIKOIL®).

6.4 **SOFT COPY FORMAT**

6.4.1 The WTS Illustrated Parts Manual soft copy format must be PDF, with searchable text, with pages rotated as needed for normal viewing on screen.

6.4.2 **Soft Copy format submission size below 7MB** – The WTS Illustrated Parts Manual PDF may be submitted via email as follows:

6.4.2.1 To Field: As per the related CDRL section 9.A. Addressee, as identified in the contract.

6.4.2.2 Subject Field: WTS-ILS-206 – WTS Illustrated Parts Manual – Rev [#] – [Date of Issue]

6.4.3 **Soft Copy format submission size at or above 7MB** - The WTS Illustrated Parts Manual PDF and its native file must be submitted on CD or DVD media and be labelled as follows:

6.4.3.1 Water Treatment System

6.4.3.2 WTS Illustrated Parts Manual;

6.4.3.3 WTS-ILS-206;

6.4.3.4 The Revision number, and

6.4.3.5 The date of issue.

A3.23 DID – WTS Operator Training Package

DATA ITEM DESCRIPTION	
1. TITLE **WTS Operator Training Package**	2. IDENTIFICATION NUMBER DID WTS-ILS-207
3. DESCRIPTION The WTS Operator Training Package will be used as the reference material during the Training Sessions, and to facilitate future lesson plan preparation on the operation, Operator maintenance and storage of the equipment.	
4. RELATED DOCUMENTS **C-01-100-100/AG-008** *Writer's Guide for Technical Documentation*	5. CONTRACT REFERENCE SOW: **Para 8.3.1.6.1 (pg.45)** CDRL: **App. A2.23 (pg.138)**

6. PREPARATION INSTRUCTIONS

6.1. **CONTENT**

6.1.1. The WTS Operator Training Package course material must include, in the order judged most appropriate by the Contractor, the following subjects:

6.1.1.1. General Description/Equipment Overview;

6.1.1.2. Pre-use testing/inspection;

6.1.1.3. Preparation and set up for use;

6.1.1.4. Use and operation, including operation under emergency, adverse, or abnormal conditions, when applicable;

6.1.1.5. Preparation for travel and handling;

6.1.1.6. Storage, preservation, exercising, and reactivation procedures;

6.1.1.7. Safety and Hazardous material issues;

6.1.1.8. Operator Troubleshooting and testing;

6.1.1.9. Basic diagnosis and fault finding; and,

6.1.1.10. Operator Maintenance IAW the Maintenance Concept Paragraph 8.1 (pg. 43).

6.1.2. The Operator Training Package course material must be amplified by colour illustrations, line drawings, and good quality colour pictures.

6.1.3. The WTS Operator Training Package course material subjects must be approached from the perspective of a user trained in basic water purification concepts.

6.1.4. The WTS Operator Training Package course material must not present any information that cannot also be found in the Technical Publication Package documents; those documents remain the primary reference for the equipment.

6.1.5. The WTS Operator Training Package must include a **Student Handout** that includes the course material described above.

6.1.6. The WTS Operator Training Package must include an **Instructor Lesson Plan** that includes the course material described above, speaker's notes, and outlines the following:

6.1.6.1. Classroom's physical and functional requirements;

6.1.6.2. Field area's physical and functional requirements;

6.1.6.3. Training Session schedule, divided by course material subjects;

6.1.6.4. Instructor/Student ratio for the course material subjects;

6.1.6.5. Training materiel to be supplied by the Contractor;

6.1.6.6. Training material to be supplied by Canada.

6.2. **GENERAL FORMAT**

6.2.1. The WTS Operator Training Package can be prepared in the Contractor's format while using C-01-100-100/AG-008 as guidance.

6.2.2. No Contractor or sub-contractor logo, name, trademark, or other wording or device that may be interpreted as advertising must appear in the publication.

6.2.3. The WTS Operator Training Package **Student Handout** must have no more than three (3) slides per page of the course material, and have additional space and lines for note taking.

6.2.4. The WTS Operator Training Package **Instructor Lesson Plan** must have one (1) slide per page of the course material, with the speaker's notes below it.

6.3. **HARD COPY FORMAT**

6.3.1. The WTS Operator Training Package must be furnished in a three (3) ring binder(s) and printed on paper with these characteristics:

6.3.1.1. Weight of no less than 90 gsm;

6.3.1.2. Brightness of no less than 92 ISO brightness;

6.4. **SOFT COPY FORMAT**

6.4.1. The WTS Operator Training Package soft copy format must be MS PowerPoint.

6.4.2. **Soft Copy format submission size below 7MB** – The WTS Operator Training Package may be submitted via email as follows:

6.4.2.1. To Field: As per the related CDRL section 9.A. Addressee, as identified in the contract.

6.4.2.2. Subject Field: WTS-ILS-207 – WTS Operator Training Package – [Rev #] – [Date of Issue]

6.4.3. **Soft Copy format submission size at or above 7MB** - The WTS Operator Training Package file must be submitted on CD or DVD media and be labelled as follows:

6.4.3.1. Water Treatment System

6.4.3.2. WTS Operator Training Package;

6.4.3.3. WTS-ILS-207;

6.4.3.4. The Revision number, and

6.4.3.5. The date of issue.

A3.24 DID – WTU and ASU Technician Training Package

DATA ITEM DESCRIPTION	
1. TITLE **WTU and ASU Technician Training Package**	2. IDENTIFICATION NUMBER DID WTS-ILS-208
3. DESCRIPTION The WTU and ASU Technician Training Package will be used as the reference material during the Training Sessions, and to facilitate future lesson plan preparation on the operation, Technician maintenance and storage of the equipment.	
4. RELATED DOCUMENTS **C-01-100-100/AG-008** *Writer's Guide for Technical Documentation*	5. CONTRACT REFERENCE SOW: **Para 8.3.1.7.1 (pg. 45)** CDRL: **App. A2.24 (pg.139)**

6. PREPARATION INSTRUCTIONS

6.1. **CONTENT**

6.1.1. The WTU and ASU Technician Training Package course material must include, in the order judged most appropriate by the Contractor, the following subjects:

6.1.1.1. General Description/Equipment Overview;

6.1.1.2. Pre-use testing/inspection;

6.1.1.3. Preparation and set up for use;

6.1.1.4. Use and operation, including operation under emergency, adverse, or abnormal conditions, when applicable;

6.1.1.5. Storage, preparation for travel, preservation, and handling procedures;

6.1.1.6. Safety and hazardous material issues;

6.1.1.7. Troubleshooting and testing;

6.1.1.8. Advanced diagnosis and fault finding;

6.1.1.9. Corrective and preventive maintenance procedures that are particular to the equipment versus general mechanical procedures, IAW the Maintenance Concept Paragraph 8.1 (pg. 43).

6.1.2. The Technician Training Package course material must be amplified by colour illustrations, line drawings, and good quality colour pictures.

6.1.3. The WTU and ASU Technician Training Package course material subjects must be approached from the perspective of Technicians who are experienced in general water treatment equipment maintenance.

6.1.4. The WTU and ASU Technician Training Package course material must not present any information that cannot also be found in the Technical Publication Package documents; those documents remain the primary reference for the equipment.

6.1.5. The WTU and ASU Technician Training Package must include a **Student Handout** that includes the course material described above.

6.1.6. The WTU and ASU Technician Training Package must include an **Instructor Lesson Plan** that includes the course material described above, speaker's notes, and outlines the following:

6.1.6.1. Classroom's physical and functional requirements;

6.1.6.2. Field area's physical and functional requirements;

6.1.6.3. Training Session schedule divided by course material subjects;

6.1.6.4. Instructor/Student ratio for the course material subjects;

6.1.6.5. Training materiel to be supplied by the Contractor;

6.1.6.6. Training material to be supplied by Canada.

6.2. **GENERAL FORMAT**

6.2.1. The WTU and ASU Technician Training Package can be prepared in the Contractor's format, using C-01-100-100/AG-008 as guidance.

6.2.2. No Contractor or sub-contractor logo, name, trademark, or other wording or device that may be interpreted as advertising must appear in the publication.

6.2.3. The WTU and ASU Technician Training Package **Student Handout** must have no more than three (3) slides per page of the course material, and have additional space and lines for note taking.

6.2.4. The WTU and ASU Technician Training Package **Instructor Lesson Plan** must have one (1) slide per page of the course material, with the speaker's notes below it.

6.3. **HARD COPY FORMAT**

6.3.1. The WTU and ASU Technician Training Package must be furnished in a three (3) ring binder(s) and printed on paper with these characteristics:

6.3.1.1. Weight of no less than 90 gsm;

6.3.1.2. Brightness of no less than 92 ISO brightness;

6.4. **SOFT COPY FORMAT**

6.4.1. The WTU and ASU Technician Training Package soft copy format must be MS PowerPoint.

6.4.2. **Soft Copy format submission size below 7MB** – The WTU and ASU Technician Training Package may be submitted via email as follows:

6.4.2.1. To Field: As per the related CDRL section 9.A. Addressee, as identified in the contract.

6.4.2.2. Subject Field: WTS-ILS-208 – WTU and ASU Technician Training Package – [Rev #] – [Date of Issue]

6.4.3. **Soft Copy format submission size at or above 7MB** - The WTU and ASU Technician Training Package file must be submitted on CD or DVD media and be labelled as follows:

6.4.3.1. Water Treatment System

6.4.3.2. WTU and ASU Technician Training Package;

6.4.3.3. WTS-ILS-208;

6.4.3.4. The Revision number, and

6.4.3.5. The date of issue.

A3.25 DID – WTS Preservation, Storage and Reactivation Instructions

DATA ITEM DESCRIPTION	
1. TITLE **WTS Preservation, Storage and Reactivation Instructions**	2. IDENTIFICATION NUMBER DID WTS-ILS-209
3. DESCRIPTION The WTS Preservation, Storage and Reactivation Instructions (PSRI) provides guidance for the storage and preservation, in-storage inspections, exercising, and reactivation of equipment.	
4. RELATED DOCUMENTS **D-01-100-211/SF-000** *Preservation, Storage and Handling Instructions* **C-01-100-100/AG-008** *Writer's Guide for Technical Documentation*	5. CONTRACT REFERENCE SOW: **Para 8.3.1.8.1 (pg. 45)** CDRL: **App. A2.25 (pg.140)**

6. PREPARATION INSTRUCTIONS

6.1. **CONTENT**

6.1.1. The WTS PSRI must contain the necessary data as outlined in D-01-100-211/SF-000, *Preservation, Storage and Handling Instructions,* **omitting** Part 4 – Handling and Shipping.

6.1.2. The WTS PSRI must be divided by main assembly (WTU, Trailer, MEU, ASU and WSU).

6.2. **GENERAL FORMAT**

6.2.1. The PSRI must be prepared in the Contractor's format while being in full conformance with the above-stated issue of C-01-100-100/AG-008.

6.2.2. The PSRI must have the National Defence Index of Documentation (NDID) number, provided to the Contractor by DND, on the top right corner of all the pages.

6.3. **HARD COPY FORMAT**

6.3.1. The accepted PSRI hard copies must be:

6.3.1.1. Printed on paper with these characteristics:

6.3.1.1.1. Standard US Letter Size (216 mm x 270 mm);

6.3.1.1.2. Covers: 320-370 gsm polyester film (such as Pico Film), matt surface and white;

6.3.1.1.3. Pages: 90-150 gsm polyester film (such as Pico Film), matt surface and white;

6.3.1.2. Bound with white or black spiral PVC coil (such as PLASTIKOIL®)

6.4. **SOFT COPY FORMAT**

6.4.1. The PSRI must be provided as a PDF file with searchable text that matches the printed publication's format and layout. Links, bookmarks and thumbnails are to be included in the PDF file. All references made to a specific paragraph, figure, appendix must be appropriately linked.

6.4.2. Viewing the PDF version: pages, regardless of size, containing text and illustrations in landscape, must be rotated for electronic viewing and reading in landscape.

6.4.3. **Soft Copy format submission size below 7MB** – The PRSI PDF and its native file may be submitted via email as follows:

6.4.3.1. To Field: As per the related CDRL section 9.A. Addressee, as identified in the contract.

6.4.3.2. Subject Field: WTS-ILS-209 – PRSI – [Rev #] – [Date of Issue]

6.4.4. **Soft Copy format submission size at or above 7MB** - The PRSI PDF and its native file must be submitted on CD or DVD media and be labelled as follows:

6.4.4.1. Water Treatment System

6.4.4.2. PRSI;

6.4.4.3. WTS-ILS-209;

6.4.4.4. The Revision number, and

6.4.4.5. The date of issue.

A3.26 DID – WTS Stowage, Shipping and Handling Instructions

DATA ITEM DESCRIPTION	
1. TITLE **WTS Stowage, Shipping and Handling Instructions**	2. IDENTIFICATION NUMBER DID WTS-ILS-210
3. DESCRIPTION The WTS Stowage, Shipping and Handling Instructions (SSHI) manual provides guidance for the safe stowage, shipping and handling of the equipment.	
4. RELATED DOCUMENTS **D-01-100-211/SF-000** *Preservation, Storage and Handling Instructions* **C-01-100-100/AG-008** *Writer's Guide for Technical Documentation*	5. CONTRACT REFERENCE SOW: **Paragraph 8.3.1.9.1 (pg.45)** CDRL: **App. A2.26 (pg.141)**

6. PREPARATION INSTRUCTIONS

6.1. **CONTENT**

6.1.1. The WTS SSHI must contain the necessary data as outlined in Part 4 – *Handling and Shipping* of D-01-100-211/SF-000, arranged for the following scenarios:

6.1.1.1. The WTS as one unit, consisting of the WTU and the MEU, secured to the Trailer:

6.1.1.1.1. Standard means of conveyance, including:

6.1.1.1.1.1. Towed by SMP vehicle;

6.1.1.1.1.2. Towed by an adequate civilian / commercial vehicle;

6.1.1.1.1.3. Rail transport;

6.1.1.1.1.4. Maritime transport; and,

6.1.1.1.1.5. Air Transport.

6.1.1.1.2. Standard means of handling, including:

6.1.1.1.2.1. Cranes

6.1.1.2. If any of the means of conveyance or handling above require the removal of the WTU and MEU from the Trailer, this removal procedure must be included in the WTS SSHI.

6.1.1.3. The Trailer alone;

6.1.1.3.1. Standard means of conveyance, including:

6.1.1.3.1.1. Towed by SMP vehicle;

6.1.1.3.1.2. Towed by civilian / commercial vehicle;

6.1.1.3.1.3. Stowed on another generic flat trailer;

6.1.1.3.1.4. Rail transport;

6.1.1.3.1.5. Maritime transport; and,

6.1.1.3.1.6. Air Transport.

6.1.1.3.2. All standard means of handling:

6.1.1.3.2.1. Cranes;

6.1.1.3.2.2. Military Mobile Maintenance and Recovery Vehicles (TBD);

6.1.1.4. The WTU and MEU as conjoined and separate containers:

6.1.1.4.1. Standard means of conveyance, including:

6.1.1.4.1.1. Stowed on a generic flat trailer;

6.1.1.4.1.2. Stowed on the WTS Trailer;

6.1.1.4.1.3. Rail transport;

6.1.1.4.1.4. Maritime transport; and,

6.1.1.4.1.5. Air Transport.

6.1.1.4.2. All standard means of handling:

6.1.1.4.2.1. Cranes;

6.1.1.4.2.2. Forklifts;

6.1.2. Data common to all means of conveyance and handling need not be repeated and can be grouped in a general section.

6.2. GENERAL FORMAT

6.2.1. The SSHI must be prepared in the Contractor's format while being in full conformance with the above-stated issue of C-01-100-100/AG-008.

6.2.2. The SSHI must have the National Defence Index of Documentation (NDID) number, provided to the Contractor by DND, on the top right corner of all the pages.

6.3. HARD COPY FORMAT

6.3.1. The accepted SSHI hard copies must be:

6.3.1.1. Printed on paper with these characteristics:

6.3.1.1.1. Standard US Letter Size (216 mm x 270 mm);

6.3.1.1.2. Covers: 320-370 gsm polyester film (such as Pico Film), matt surface and white;

6.3.1.1.3. Pages: 90-150 gsm polyester film (such as Pico Film), matt surface and white;

6.3.1.2. Bound with white or black spiral PVC coil (such as PLASTIKOIL®)

6.4. SOFT COPY FORMAT

6.4.1. The SSHI must be provided as a PDF file with searchable text that matches the printed publication's format and layout. Links, bookmarks and thumbnails are to be included in the PDF file. All references made to a specific paragraph, figure, appendix must be appropriately linked.

6.4.2. Viewing the PDF version: pages, regardless of size, containing text and illustrations in landscape, must be rotated for electronic viewing and reading in landscape.

6.4.3. **Soft Copy format submission size below 7MB** – The SSHI PDF and its native file may be submitted via email as follows:

6.4.3.1. To Field: As per the related CDRL section 9.A. Addressee, as identified in the contract.

6.4.3.2. Subject Field: WTS-ILS-210 – SSHI – [Rev #] – [Date of Issue]

6.4.4. **Soft Copy format submission size at or above 7MB** - The SSHI PDF and its native file must be submitted on CD or DVD media and be labelled as follows:

6.4.4.1. Water Treatment System

6.4.4.2. SSHI;

6.4.4.3. WTS-ILS-210;

6.4.4.4. The Revision number, and

6.4.4.5. The date of issue.

A3.27 DID – WTS Data Summary

DATA ITEM DESCRIPTION	
1. TITLE **WTS Data Summary**	2. IDENTIFICATION NUMBER DID WTS-ILS-211
3. DESCRIPTION The WTS Data Summary provides technical specifications and descriptive identification data for the equipment, in abbreviated form, suitable for management or staff planning.	
4. RELATED DOCUMENTS **D-01-100-200/SF-00**, *Preparation of Equipment Data Summaries; and,* **C-01-100-100/AG-008,** *Writer's Guide for Technical Documentation*	5. CONTRACT REFERENCE SOW: **Para 8.3.1.10.1 (pg. 45)** CDRL: **App. A2.27 (pg. 142)**

6. PREPARATION INSTRUCTIONS

6.1. **CONTENT**

6.1.1. The WTS Data Summary's content must be as outlined in D-01-100-200/SF-015, with the deviation that only line drawings must be used. Only applicable data points need to be included, i.e. the document must not contain "not applicable" or "n/a" markings.

6.1.2. The WTS Data Summary contents must be included for the following system permutations, in the order listed, each in a ready-to-deploy configuration:

6.1.2.1. The WTS complete, with WTU, MEU loaded and secured to the Trailer, ready to deploy

6.1.2.2. The WTU container independently;

6.1.2.3. The MEU container independently; and,

6.1.2.4. The Trailer independently.

6.2. **GENERAL FORMAT**

6.2.1. The WTS Data Summary must be prepared in the Contractor's format while being in full conformance with the above-stated issue of C-01-100-100/AG-008.

6.2.2. The WTS Data Summary must have the National Defence Index of Documentation (NDID) number, provided to the Contractor by DND, on the top right corner of all the pages.

6.3. **HARD COPY FORMAT**

6.3.1. The accepted WTS Data Summary hard copies must be:

6.3.1.1. Printed on paper with these characteristics:

6.3.1.1.1. Standard US Letter Size (216 mm x 270 mm);

6.3.1.1.2. Covers: 320-370 gsm polyester film (such as Pico Film), matt surface and white;

6.3.1.1.3. Pages: 90-150 gsm polyester film (such as Pico Film), matt surface and white;

6.3.1.2. Bound with white or black spiral PVC coil (such as PLASTIKOIL®)

6.4. **SOFT COPY FORMAT**

6.4.1. The WTS Data Summary must be provided as a PDF file with searchable text that matches the printed publication's format and layout. Links, bookmarks and thumbnails are to be included in the PDF file. All references made to a specific paragraph, figure, appendix must be appropriately linked.

6.4.2. **Soft Copy format submission size below 7MB** – The WTS Data Summary PDF and its native file may be submitted via email as follows:

6.4.2.1. To Field: As per the related CDRL section 9.A. Addressee, as identified in the contract.

6.4.2.2. Subject Field: WTS-ILS-211 – WTS Data Summary – [Rev #] – [Date of Issue]

6.4.3. **Soft Copy format submission size at or above 7MB -** The WTS Data Summary PDF and its native file must be submitted on CD or DVD media and be labelled as follows:

6.4.3.1. Water Treatment System

6.4.3.2. WTS Data Summary;

6.4.3.3. WTS-ILS-211;

6.4.3.4. The Revision number, and

6.4.3.5. The date of issue.

A3.28 DID – MEU and ASU Stowage Maps

DATA ITEM DESCRIPTION	
1. TITLE **MEU, ASU and WSU Stowage Maps**	2. IDENTIFICATION NUMBER DID WTS-ILS-212
3. DESCRIPTION The MEU, ASU and WSU Stowage Maps will lay out where items are stored within the MEU Enclosure and the ASU Enclosure in separate documents to allow WTS Users to quickly locate items or identify missing items and aid in the stowage of items when operations are complete.	
4. RELATED DOCUMENTS	5. CONTRACT REFERENCE SOW: **Para 8.3.1.10.1 (pg. 46)** CDRL: **App. A2.28 (pg. 143)**

6. PREPARATION INSTRUCTIONS

6.1. **CONTENT**

6.1.1. The MEU, ASU and WSU Stowage Maps must graphically map out, in separate posters, the locations of all of the items included in:

6.1.1.1. The MEU Enclosure's Ancillary Equipment (A1.2.2.2) and Consumables (A1.2.2.3),
6.1.1.2. The ASU Enclosure's Cold Weather Ancillary Equipment (A1.2.3.2); and
6.1.1.3. The WSU Enclosure's Water Storage Ancillary Equipment (A1.2.4.2)

6.1.2. Items mapped within the Stowage Maps must be identified by item name, MRN, and NATO Stock Number.

6.1.3. If a numbering or other marking scheme is used on shelves or drawers or etc. In the MEU, ASU and WSU Enclosures, this scheme must also be used in the Stowage Maps using the same graphical representation as practical (font, symbology, etc.).

6.2. **GENERAL FORMAT**

6.2.1. The MEU, ASU and WSU Stowage Maps must be prepared as single-sided, single sheet, black and white posters, 11" x 17" (standard US Ledger size).

6.3. **HARD COPY FORMAT**

6.3.1. The MEU, ASU and WSU Stowage Maps must be printed on polyester film (such as Pico Film), 320-370 gsm, matt surface and white.

6.4. **SOFT COPY FORMAT**

6.4.1. The MEU, ASU and WSU Stowage Maps must be provided as PDF or MS Office-compatible files.

6.4.2. **Soft Copy format submission size below 7MB** – MEU, ASU and WSU Stowage Maps may be submitted via email as follows:

6.4.2.1. To Field: As per the related CDRL section 9.A. Addressee, as identified in the contract.

6.4.2.2. Subject Field: WTS-ILS-212 – MEU (or) ASU (or) WSU Stowage Map Poster – [Rev #] – [Date of Issue]

6.4.3. **Soft Copy format submission size at or above 7MB** – The MEU, ASU and WSU Stowage Maps file must be submitted on CD or DVD media and be labelled as follows:

6.4.3.1. Water Treatment System

6.4.3.2. MEU, ASU and WSU Stowage Map Poster

6.4.3.3. WTS-ILS-212;

6.4.3.4. The Revision number, and

6.4.3.5. The date of issue.

A3.29 DID – WTU Process and Flow Diagrams

DATA ITEM DESCRIPTION	
1. TITLE **WTU Process and Flow Diagrams**	2. IDENTIFICATION NUMBER DID WTS-ILS-213
3. DESCRIPTION WTU Process and Flow (P&F) Diagrams show, in poster form, the complete routing of any and all fluids involved in the various water treatment processes through the components of the WTU.	
4. RELATED DOCUMENTS	5. CONTRACT REFERENCE SOW: **Para 8.3.1.12.1 (pg.46)** CDRL: **App. A2.29 (pg.144)**

6. PREPARATION INSTRUCTIONS

6.1. **CONTENT**

6.1.1. The P&F Diagrams must show (as applicable to the process and WTU design) the flow of raw water; concentrate; ultra-filtration filtrate; permeate; backwash, etc. for every process available to the WTU operators and maintainers, such as:

6.1.1.1. First and second passes;

6.1.1.2. Ultra-filtration back flush, clean, forward flush;

6.1.1.3. Reverse Osmosis single and double pass; membrane exercising;

6.1.1.4. WTU Preservation

6.1.2. Each process from 6.1.1 above must have a P&F Diagram on their own page.

6.1.3. Each P&F Diagram must:

6.1.3.1. Show all of the WTU components involved in fluid flow, regardless of their involvement in the process being described, in roughly the same layout and relative location as in the actual WTU as practical;

6.1.3.2. Have the involved fluid flows colour-coded by type. This colour code must be identical between P&F Diagrams;

6.1.3.3. Use simplified symbols for the active components (valves, pumps, gauges), labelled for easy location of the corresponding components within the WTU.

6.1.3.4. Have a symbols legend on each P&F diagram.

6.2. **GENERAL FORMAT**

6.2.1. The WTU Process and Flow Diagrams must be prepared in the Contractor's format in standard US Ledger paper size (11" x 17"), landscape orientation.

6.3. **HARD COPY FORMAT**

6.3.1. The accepted WTU Process and Flow Diagrams hard copies must be:

6.3.1.1. Printed on 320-370 gsm polyester film (such as Pico Film), matt surface and white;

6.3.1.2. Bound with white or black spiral PVC coil (such as such as PLASTIKOIL®) on the long edge, with images oriented so that no booklet rotation is necessary to read both the upper and lower P&F diagrams when the booklet is open.

6.4. **SOFT COPY FORMAT**

6.4.1. The WTU Process and Flow Diagrams must be provided as PDF and native formats.

6.4.2. **Soft Copy format submission size below 7MB** – The WTU Process and Flow Diagrams may be submitted via email as follows:

6.4.2.1. To Field: As per the related CDRL section 9.A. Addressee, as identified in the contract.

6.4.2.2. Subject Field: WTS-ILS-213 – WTU Process and Flow Diagrams – [Rev #] – [Date of Issue]

6.4.3. **Soft Copy format submission size at or above 7MB** – The WTU Process and Flow Diagrams file must be submitted on CD or DVD media and be labelled as follows:

6.4.3.1. Water Treatment System

6.4.3.2. WTU Process and Flow Diagrams

6.4.3.3. WTS-ILS-213;

6.4.3.4. The Revision number, and

6.4.3.5. The date of issue.

A3.30 DID – WSU Operation, Maintenance and Parts Handbook

DATA ITEM DESCRIPTION	
1. TITLE **WSU Operation, Maintenance and Parts Handbook**	2. IDENTIFICATION NUMBER DID WTS-ILS-214
3. DESCRIPTION The WSU Operation, Maintenance and Parts Handbook (OMPH) will allow an operator to effectively operate and maintain the system and identify its parts.	
4. RELATED DOCUMENTS **D-01-100-205/SF-000** *Specification for Preparation of Corrective Maintenance Instruction;* **D-01-100-204/SF-000** *Specification for Preparation of Preventive Maintenance Instructions;* **C-01-100-100/AG-008** *Writer's Guide for Technical Documentation*	5. CONTRACT REFERENCE **SOW**: **Para. 8.3.1.13.1 (pg. 46)** **CDRL**: **App. A2.30 (pg. 145)**

6 PREPARATION INSTRUCTIONS

6.1 **CONTENT**

6.1.1 **Operation**

6.1.1.1 General Description/Equipment Overview;

6.1.1.2 Pre-use testing/inspection;

6.1.1.3 Preparation and set up for use, assuming a start state of a WSU Prime Mover arriving at a staging site, and including all possible configurations of IBC and plumbing;

6.1.1.4 Use and operation of each of those configurations

6.1.1.5 Equipment stowage and preparation for travel

6.1.2 **Maintenance**

6.1.2.1 The maintenance topics must consist of:

6.1.2.1.1 Pre-maintenance procedures to make the equipment safe;

6.1.2.1.2 Troubleshooting and testing;

6.1.2.1.3 Basic diagnosis and fault finding;

6.1.2.1.4 Adjustments, maintenance and repairs grouped IAW the Maintenance Concept para 8.1.2 (pg. 43), and presented IAW D-01-100-205/SF-000 and D-01-100-204/SF-000;

6.1.2.1.5 Safety/Hazardous material issues;

6.1.2.2 The maintenance material must be amplified by colour illustrations, line drawings, and good quality colour pictures.

6.1.3 **Parts Handbook**

6.1.3.1 The Maintenance and Parts Handbook must have an Illustrated Parts List section that contains all the necessary information to positively identify and relate, to each other, all the parts of the equipment that are procurable and those involved in all maintenance tasks outlined in 6.1.2 above.

6.1.3.2 The Illustrated parts List must have drawings of the parts and assemblies: line drawings and exploded views in black and white only; and,

6.1.3.3 The Illustrated parts List must have corresponding table(s) containing:

6.1.3.3.1 Item Number (callout in the drawing(s));

6.1.3.3.2 Item Name;

6.1.3.3.3 Manufacturer's Part Number;

6.1.3.3.4 Manufacturer's NCAGE code;

6.1.3.3.5 Contractor's Part Number (CPN), if the Contractor is not the original Manufacturer;

6.1.3.3.6 NATO Stock Number (NSN), if known; and,

6.1.3.3.7 Quantity per Assembly (QPA).

6.2 **GENERAL FORMAT**

6.2.1 The WSU OMPH must be prepared in the Contractor's format and must be in full conformance with the above-stated issue of C-01-100-100/AG-008.

6.3 **HARD COPY FORMAT**

6.3.1 The accepted WSU OMPH hard copies must be:

6.3.1.1 Printed on paper with these characteristics:

6.3.1.1.1 Standard US Letter Size (216 mm x 270 mm)

6.3.1.1.2 Covers: 320-370 g/m^2 polyester film (such as Pico Film), matt surface and white colour

6.3.1.1.3 Pages: 90-150 g/m^2 polyester film (such as Pico Film), matt surface and white colour

6.3.1.2 Bound with white or black spiral PVC coil (such as PLASTIKOIL®)

6.4 **SOFT COPY FORMAT**

6.4.1 The WSU OMPH must be provided as a PDF file with searchable text that matches the printed publication's format and layout.

6.4.1.1 Links, bookmarks and thumbnails are to be included in the PDF file.

6.4.1.2 All references made to a specific paragraph, figure, appendix must be appropriately linked.

6.4.1.3 Viewing the PDF version: pages, regardless of size, containing text and illustrations in landscape, must be rotated for electronic viewing and reading in landscape.

6.4.2 **Soft Copy format submission size below 7MB** – The WSU OMPH PDF and its native file may be submitted via email as follows:

6.4.2.1 To Field: As per the related CDRL section 9.A. Addressee, as identified in the contract.

6.4.2.2 Subject Field: WTS-ILS-214 – WSU OMPH – [Rev #] – [Date of Issue]

6.4.3 **Copy format submission size at or above 7MB** - The WSU OMPH PDF and its native file must be submitted on CD or DVD media and be labelled as follows:

6.4.3.1 Water Treatment System

6.4.3.2 WSU OMPH;

6.4.3.3 WTS-ILS-214;

6.4.3.4 The Revision number, and

6.4.3.5 The date of issue.

A3.31 DID – Provisioning Parts Breakdown

DATA ITEM DESCRIPTION	
1. TITLE **Provisioning Parts Breakdown**	2. IDENTIFICATION NUMBER DID WTS-ILS-215
3. DESCRIPTION The Provisioning Parts Breakdown (PPB) is a top-down breakdown of the equipment in the configuration in which it is being procured.	
4. RELATED DOCUMENTS **D-01-100-214/SF-000** *Specification for Preparation of Provisioning Documentation for Canadian Forces Equipment*	5. CONTRACT REFERENCE SOW: **Para 8.4.4.1.1 (pg. 48)** CDRL: **App.A2.31 (pg.146)**

6 PREPARATION INSTRUCTIONS

6.1 **CONTENT**

6.1.1 The PPB must be prepared IAW D-01-100-214/SF-000, with modifications listed below.

6.1.2 The following data fields must be added to the PPB:

6.1.2.1 Quantity per End Item (QPEI): Between Fields number 9 and 10, refers to the total number of times the item is used in the whole prime equipment (A-level). This field may contain whatever number of numeric characters needed to show the quantities.

6.1.2.2 SPTD filename: As the last Field, must contain the line item's applicable SPTD filename. This field may be whatever size adequate to fully show the data therein.

6.1.3 Common fasteners and hardware (items with "Y" indention code) must have an Item Name that describes their key characteristics so that equivalents can be identified from alternate sources, as possible within the mandated field size. Example: "Hex Head Screw M8 x 1.25mm, 30mm Lg, 18-8 SS"

6.1.4 For clarity:

6.1.4.1 Original Equipment Manufacturer's Part Number refers only to the Contractor which DND has contracted to supply the equipment; data from sub-contractors for items that they did not manufacture or do not control are not permitted. This field may be left blank if no data is available, or if it is the same as the Manufacturer's Reference Number (MRN).

6.1.4.2 Quantity per Assembly (QPA) refers to the number of times the item is used in the next higher assembly. For example, a C-level item's QPA will show the number of times it is used in its related B-level assembly, without being multiplied by the number of B-level assemblies.

6.1.4.3 NATO Commercial and Government Entity (NCAGE) Codes can be searched and requested through the NATO portal: https://eportal.nspa.nato.int/AC135Public/scage/CageList.aspx.

6.1.5 The Source Maintenance and Recoverability (SMR) Codes are used to communicate maintenance and supply instructions to the various logistic support levels and user organizations for the logistic support of systems, equipment, and end items. The PPB SMR Codes must be chosen from the following list:

SMR Field Position	Code	Application/Explanation
First and Second Position Source Codes	PA	Item procured and stocked for anticipated or known usage. Items are normally considered for replenishment
	PC	Item procured and stocked, but is deteriorative in nature.
	PF	Support equipment which will not be stocked, but which will be centrally procured on demand.
	XA	Item is not procured or stocked because the requirements for the item will result in the replacement of the next higher assembly
	XC	Installation drawing, diagram, instruction sheet, or field Service drawing, that is identified by the manufacturers' part number.
Third Position Maintenance Codes	C	Support item is removed, replaced, used by the operator/crew.
	O	Support item is removed, replaced, or used at the Technician Maintenance level.
	K	Repairable item. Item is removed, replaced, or used at contractor facility.
Fourth Position Repair Codes	C	The lowest maintenance activity capable of complete repair of the support item is the operator/crew.
	O	The lowest maintenance activity capable of complete repair of the support item is the Technician Maintenance level.
	K	Repairable support item. Complete repair capability exists at a designated contractor facility.
	Z	Non-repairable.
Fifth Position Recoverability Codes	C	Repairable item. When uneconomically repairable, condemn and disposed by the operator/crew.
	Z	Non-repairable item. When item becomes unserviceable, condemn and disposed of by authorized activity.
	O	Repairable item. When uneconomically repairable, condemn and dispose at organizational activity.
	K	Repairable item. Condemnation and disposal to be performed at contractor facility.

6.2 **GENERAL FORMAT**

6.2.1 The PPB must be prepared as an MS Excel spreadsheet, formatted IAW D-01-100-214/SF-000, taking into account the modifications listed in para 6.1.2 above.

6.3 **SOFT COPY FORMAT**

6.3.1 **Soft Copy format submission size below 7MB** – The PPB may be submitted via email as follows:

6.3.1.1 To Field: As per the related CDRL section 9.A. Addressee, as identified in the contract.
6.3.1.2 Subject Field: WTS-ILS-215 – PPB – [Rev #] – [Date of Issue]

6.3.2 **Soft Copy format submission size at or above 7MB** - The PPB file must be submitted on CD or DVD media and be labelled as follows:

6.3.2.1 Water Treatment System
6.3.2.2 Provisioning Parts Breakdown;
6.3.2.3 WTS-ILS-215;
6.3.2.4 The Revision number, and
6.3.2.5 The date of issue.

A3.32 DID – Supplementary Provisioning Technical Documentation

DATA ITEM DESCRIPTION	
1. TITLE **Supplementary Provisioning Technical Documentation**	2. IDENTIFICATION NUMBER DID WTS-ILS-216
3. DESCRIPTION The Supplementary Provisioning Technical Documentation (SPTD) fully identifies and describes part(s) that may be catalogued.	
4. RELATED DOCUMENTS **D-01-100-214/SF-000** *Specification for Preparation of Provisioning Documentation for Canadian Forces Equipment*	5. CONTRACT REFERENCE SOW: **Para 8.4.4.2.1 (pg. 49)** CDRL: **App. A2.32 (pg.147)**

6. **PREPARATION INSTRUCTIONS**

6.1. **CONTENT**

6.1.1. The Supplementary Provisioning Technical Documentation (SPTD) must be provided for each item appearing on the Provisioning Documentation, IAW D-01-100-214/SF-000.

6.1.2. The SPTD must include the technical data required for DND to classify and fully describe the item within the NATO codification system, allowing for item identification and cataloguing purposes.

6.2. **SOFT COPY FORMAT**

6.2.1. The SPTD must be submitted with filenames in the following format: (MRN_ (NCAGE) _ (item name).(software extension).

6.2.2. **Soft Copy format submission size below 7MB** – The SPTD may be submitted via email as follows:

6.2.2.1. To Field: As per the related CDRL section 9.A. Addressee, as identified in the contract.

6.2.2.2. Subject Field: WTS-ILS-216 – SPTD – [Rev #] – [Date of Issue]

6.2.3. **Soft Copy format submission size at or above 7MB** – The SPTD must be submitted on CD or DVD media and be labelled as follows:

6.2.3.1. Water Treatment System

6.2.3.2. SPTD;

6.2.3.3. WTS-ILS-216;

6.2.3.4. The Revision number, and

6.2.3.5. The date of issue.

A3.33 DID – Special Tools and Test Equipment

DATA ITEM DESCRIPTION	
1. TITLE **Special Tools and Test Equipment List**	2. IDENTIFICATION NUMBER DID WTS-ILS-217
3. DESCRIPTION The Special Tools and Test Equipment (STTE) provides a list of all special tools and testing equipment required to maintain and operate the equipment.	
4. RELATED DOCUMENTS	5. CONTRACT REFERENCE SOW: **Paragraph 8.4.4.3.1 (pg. 49)** CDRL: **App. A2.33 (pg.148)**

6. PREPARATION INSTRUCTIONS

6.1. **CONTENT**

6.1.1. The STTE must include the following for each item listed:

6.1.1.1. Item Name;

6.1.1.2. Reference (Manufacturer's Part) Number;

6.1.1.3. NSCM/CAGE Code;

6.1.1.4. NSN (if available) or SPTD of item (if NSN is not available);

6.1.1.5. Maintenance Level;

6.1.1.6. Recommended Buy Quantity;

6.1.1.7. Standard Unit Price;

6.1.1.8. Date of First Article Delivery;

6.1.1.9. Picture(s) or Drawing(s) of item; and,

6.1.1.10. Description and Function of STTE

6.1.2. The above STTE item list may be divided into sub-sections such as:

6.1.2.1. Operations Support Equipment;

6.1.2.2. Maintenance Support Equipment;

6.1.2.3. Calibration Equipment;

6.1.2.4. Test, Measurement and Diagnostic Equipment (TMDE):

6.1.2.5. Automatic Test Equipment (ATE) and its Test Program Set (TPS); and

6.1.2.6. Computer Resources Support Requirement.

6.2. **GENERAL FORMAT**

6.2.1. The STTE must be prepared as an MS Excel spreadsheet

6.3. **SOFT COPY FORMAT**

6.3.1. The STTE must be provided as an MS Excel Spreadsheet file.

6.3.2. **Soft Copy format submission size below 7MB** – The STTE may be submitted via email as follows:

6.3.2.1. To Field: As per the related CDRL section 9.A. Addressee, as identified in the contract.

6.3.2.2. Subject Field: WTS-ILS-217 – STTE – [Rev #] – [Date of Issue]

6.3.3. **Soft Copy format submission size at or above 7MB** – The STTE file must be submitted on CD or DVD media and be labelled as follows:

6.3.3.1. Water Treatment System

6.3.3.2. Special Tools and Test Equipment

6.3.3.3. WTS-ILS-217;

6.3.3.4. The Revision number, and

6.3.3.5. The date of issue.

A3.34 DID – Equipment Delivery Status Report

DATA ITEM DESCRIPTION	
1. TITLE **Equipment Delivery Status Report**	2. IDENTIFICATION NUMBER DID WTS-ILS-218
3. DESCRIPTION The Equipment Delivery Status Report (EDSR) will report on the Delivery Status of the WTS and to identify and correct any problems which will adversely affect their timely delivery.	
4. RELATED DOCUMENTS	5. CONTRACT REFERENCE SOW: **Para 8.4.4.4.1 (pg.49)** CDRL: **App. A2.34 (pg.149)**

6. PREPARATION INSTRUCTIONS

6.1. **CONTENT**

6.1.1. The EDSR must contain the data requested through the column headers of Table 1 shown below, and any added by the Contractor (see 6.2.1).

6.2. **GENERAL FORMAT**

6.2.1. The EDSR must be prepared in a Microsoft Excel spreadsheet containing at least the data columns shown in Table 1 below. At their discretion, the Contractor may add relevant data columns for their purposes and any they believe will be useful in monitoring and reporting the delivery status of the equipment.

6.2.2. Line items in the EDSR must be grouped by destination (Canadian Forces Supply Depots).

6.3. **SOFT COPY FORMAT**

6.3.1. The EDSR must be provided as a MS Excel spreadsheet file.

6.3.2. **Soft Copy format submission size below 7MB** – The EDSR may be submitted via email as follows:

6.3.2.1. To Field: As per the related CDRL section 9.A. Addressee, as identified in the contract.

6.3.2.2. Subject Field: WTS-ILS-218 – EDSR – [Rev #] – [Date of Issue]

6.3.3. **Soft Copy format submission size at or above 7MB** – The EDSR file must be submitted on CD or DVD media and be labelled as follows:

6.3.3.1. Water Treatment System

6.3.3.2. EDSR

6.3.3.3. WTS-ILS-218

6.3.3.4. The Report's Date

Table 1

Contract Delivery Status Report - WTT

		Contract Number:	W8476-XXXX		Report Date:	28/05/2018
		WTT NSN:	1000-21-789-7890		Next Report:	26/06/2018

Destination	Line No.	VIN (or S/N)	Status	Anticipated Ship Date:	Actual Ship Date:	Notes
Edmonton (7CFSD)	1	2ASD-100	Shipped	25/05/2018	26/05/2018	Invoice # L1022, 30/05/2018
	2	2ASD-101	Ready to ship	01/06/2018		Invoice # L1024, 09/06/2018
	3	2ASD-102	Ready to ship	01/06/2018		Invoice # L1024, 09/06/2018
	4	2ASD-103	In Production	16/06/2018		
	5	2ASD-104	In Production	16/06/2018		
	6	2ASD-105	In Production	16/06/2018		
	7	2ASD-106	In Production	16/06/2018		
	8	2ASD-107	In QA	10/06/2018		On track to ship
	9	2ASD-108	In QA	10/06/2018		On track to ship
Montreal (25CFSD)	10	2ASD-109	Prod: July 2018	18/08/2018		May be delayed due to part back order
	11	2ASD-110	Prod: July 2018	18/08/2018		May be delayed due to part back order
	12	2ASD-111	Prod: July 2018	18/08/2018		May be delayed due to part back order
	13	2ASD-112	Prod: July 2018	18/08/2018		May be delayed due to part back order
	14	2ASD-113	Prod: Aug 2018	23/09/2018		
	15	2ASD-114	Prod: Aug 2018	23/09/2018		
	16	2ASD-115	Prod: Aug 2018	23/09/2018		
	17	2ASD-116	Prod: Aug 2018	23/09/2018		

A3.35 DID – Material Identification Data Set

DATA ITEM DESCRIPTION	
1. TITLE **Material Identification Data Set**	2. IDENTIFICATION NUMBER **DID WTS-ILS-219**
3. DESCRIPTION To identify the data elements and format required to complete the Materiel Identification Data Set (MIDS) for each serialized item being procured. This data will be used to create the WTS Equipment Master Record.	
4. RELATED DOCUMENTS MIDS Excel sheet template: oem-emr-template.xls	5. CONTRACT REFERENCE **SOW**: **Para. 8.4.4.5 (pg. 49)** **CDRL**: **App. A2.35 (pg. 150)**

6. PREPARATION INSTRUCTIONS

6.1. **CONTENT**

6.1.1. The MIDS must contain the following data:

6.1.1.1. Unique Item Identification

6.1.1.1.1. Item Description (English)

6.1.1.1.2. Item Description (French)

6.1.1.1.3. Manufacturer's NCAGE

6.1.1.1.4. Manufacturer's Part Number (MPN)

6.1.1.1.5. Manufacturer's Serial Number

6.1.1.2. Parent Identification:

6.1.1.2.1. Applicable ERN, or

6.1.1.2.2. Parent Manufacturer's NCAGE

6.1.1.2.3. Parent Manufacturer's Part Number (MPN)

6.1.1.2.4. Parent Manufacturer's Serial Number

6.2. **GENERAL FORMAT**

6.2.1. The MIDS must be presented in accordance with the MIDS Excel Sheet template referenced.

6.3. **SOFT COPY FORMAT**

6.3.1. The MIDS must be delivered as an Excel spreadsheet.

6.3.2. **Soft Copy format submission size below 7MB** – The MIDS may be submitted via email as follows:

6.3.2.1. To Field: As per the related CDRL section 9.A. Addressee, as identified in the contract.

6.3.2.2. Subject Field: WTS-ILS-219 – MIDS – [Rev #] – [Date of Issue]

6.3.3. **Soft Copy format submission size at or above 7MB** – The MIDS file must be submitted on CD or DVD media and be labelled as follows:

6.3.3.1. Water Treatment System

6.3.3.2. Material Identification Data Set

6.3.3.3. WTS-ILS-219;

6.3.3.4. The Revision number, and

6.3.3.5. The date of issue.

A3.36 DID – Identification Plates – Design Template & Populated Designs

DATA ITEM DESCRIPTION	
1. TITLE **Identification Plates – Design Template & Populated Designs**	2. IDENTIFICATION NUMBER DID WTS-ILS-220
3. DESCRIPTION The Identification Plates uniquely identify equipment and components and spares based on the procedures governing the identification marking of Canadian military property.	
4. RELATED DOCUMENTS **D-02-002-001/SG-001** *Canadian Forces Standard Identification Marking of Canadian Military Property* **D-01-400-002/SF-000** *Specification for Levels of Engineering Drawings and Associated Lists*	5. CONTRACT REFERENCE SOW: **Paragraph 8.7.1 (pg. 50)** CDRL: **App. A2.35 (pg.150)**

6. PREPARATION INSTRUCTIONS

6.1. **CONTENT AND GENERAL FORMAT**

6.1.1. IAW D-02-002-001/SG-001, the Identification Plates affixed to each item included in ANNEX A1, SOW paragraph 8.7.1 must be of size, format, and construction appropriate for the item being identified, and contain the data required for those Identification Plate formats in both official languages.

6.1.2. The Identification Plates Design Template & Populated Designs must be prepared as representative Level 2 drawings (see D-01-400-002/SF-000).

6.1.2.1. The Level 2 drawings must include the mounting or installation method for each Identification Plate, with any fasteners described by size, and/or technical standard, and/or NSN, and quantity.

6.2. **HARD COPY FORMAT**

6.2.1. The Identification Plates Design Template & Populated Designs must be:

6.2.1.1. Printed in 1:1 scale;

6.2.1.2. Printed on Standard US Ledger size paper (432 mm x 279 mm), with a:

6.2.1.2.1. Weight of no less than 90 gsm;

6.2.1.2.2. Brightness of no less than 92 ISO brightness;

6.3. **SOFT COPY FORMAT**

6.3.1. The Identification Plates Design Template & Populated Designs must be provided as PDF files, labelled by [Item Name]_[MRN].pdf.

6.3.2. The Identification Plates Design Template and Populated Designs PDFs containing text and illustrations in landscape, must be rotated for electronic viewing and reading in landscape.

6.3.3. **Soft Copy format submission size below 7MB** – The Identification Plates Design Template & Populated Designs may be submitted via email as follows:

6.3.3.1. To Field: As per the related CDRL section 9.A. Addressee, as identified in the contract.

6.3.3.2. Subject Field: WTS-ILS-220 – Identification Plates – [Rev #] – [Date of Issue]

6.3.4. **Soft Copy format submission size at or above 7MB** – The Identification Plates Design Template & Populated Designs file must be submitted on CD or DVD media and be labelled as follows:

6.3.4.1. Water Treatment System

6.3.4.2. Identification Plates

6.3.4.3. WTS-ILS-220;

6.3.4.4. The Revision number, and

6.3.4.5. The date of issue.

A3.37 DID – Controlled & Non-Controlled Goods List

DATA ITEM DESCRIPTION	
1. TITLE **Controlled & Non-Controlled Goods List (CNCGL)**	2. IDENTIFICATION NUMBER DID WTS-ILS-221
3. DESCRIPTION Controlled Goods Items – The CNCGL identifies if the controlled goods end items, components and sub-components of the equipment are specifically designed and modified for military purpose, and provides the Demilitarization Instructions if required. Non-Controlled Goods Items – The CNCGL still includes non-controlled goods end items, components and sub-components of the equipment, as they will still require a DMC code assignment.	
4. RELATED DOCUMENTS **C-02-007-000/AG-001** *Controlled Technology Access and Transfer (CTAT) Manual*	5. CONTRACT REFERENCE SOW: **Para 8.8.1 (pg. 50)** CDRL: **App. A2.37 (pg.152)**

6. PREPARATION INSTRUCTIONS

6.1. **CONTENT**

6.1.1. The CNCGL must identify end items accordingly, IAW C-02-007-000/AG-001:

6.1.1.1. For Canadian origin items, Canada's Export Control List (ECL) articles that apply IAW the Defence Product Act (DPA);

6.1.1.2. For US origin dual use, the Export Control Classification Number (ECCN) of the Commerce Control List that applies;

6.1.1.3. For US origin controlled goods also known as defence articles, the United States Munitions List (USML) Category and paragraph that apply IAW the International Traffic in Arms Regulations (ITAR);and

6.1.1.4. For all other countries other than Canada and the USA, the category and article of the Wassenaar Control List that applies.

6.1.1.5. All items require a Demilitarization Code (DMC).

6.2. **GENERAL FORMAT**

6.2.1. The CNCGL must be in spreadsheet format with 6 columns:

6.2.1.1. Item name;

6.2.1.2. Ref paragraph for Canadian origin items (ECL);

6.2.1.3. Ref paragraph for US origin controlled goods (USML);

6.2.1.4. Demilitarization Code (DMC);

6.2.1.5. Formal Demilitarisation Instructions, if DMC is F;

6.2.1.6. Remarks.

6.3. **HARD COPY FORMAT**

6.3.1. The CNCGL must be printed on paper with these characteristics:

6.3.1.1. Weight of no less than 90 gsm;

6.3.1.2. Brightness of no less than 92 ISO brightness;

6.4. **SOFT COPY FORMAT**

6.4.1. The CNCGL must be provided as an MS Excel Spreadsheet file.

6.4.2. **Soft Copy format submission size below 7MB** – The CNCGL may be submitted via email as follows:

6.4.2.1. To Field: As per the related CDRL section 9.A. Addressee, as identified in the contract.

6.4.2.2. Subject Field: WTS-ILS-221 – CNCGL – [Rev #] – [Date of Issue]

6.4.3. **Soft Copy format submission size at or above 7MB** – The CNCGL file must be submitted on CD or DVD media and be labelled as follows:

6.4.3.1. Water Treatment System

6.4.3.2. CNCGL

6.4.3.3. WTS-ILS-221;

6.4.3.4. The Revision number, and

6.4.3.5. The date of issue.

A3.38 DID – Identification Labels for Storage and Shipment and Packaging Codes

DATA ITEM DESCRIPTION

1. TITLE	2. IDENTIFICATION NUMBER
Identification Labels for Storage and Shipment and Packaging Codes	DID WTS-ILS-222

3. DESCRIPTION

The Identification Labels for Storage and Shipment (ILSS) and Packaging Codes ensures that the labelling used to identify packages for items procured by DND and shipped to and stored at a Canadian facility comply with CAF Specifications. As well, this will allow DND to obtain a complete record of packaging codes for catalogued items of the equipment.

4. RELATED DOCUMENTS	5. CONTRACT REFERENCE
D-LM-008-011/SF-001 *Preparation and Use of Packaging Requirements Codes* **D-LM-008-002/SF-001** *Specification for Marking for Storage and Shipment* **D-01-400-002/SF-000** *Levels of Engineering Drawings and Associated Lists* **CF271** DND Form *Packaging Data*	SOW: **Para 8.9.3 (pg.51)** CDRL: **App. A2.38 (pg.153)**

6. PREPARATION INSTRUCTIONS

6.1. **CONTENT AND GENERAL FORMAT**

6.1.1. The ILSS designs, populated with the appropriate data, must be provided as Level 1 drawings (see D-01-400-002/SF-000) and include dimensions to show the measurements as defined by D-LM-008-002/SF-001 (example: text size, bar code dimensions).

6.1.2. A separate Packaging Code (CF271 Form) must be provided electronically for each item that:

6.1.2.1. Requires special packaging, packing, or preservation considerations to meet the required protection level (see 4.7.1 of the SOW), as per D-LM-008-011/SF-001 (see Table 1 below); and,

6.1.2.2. Has a NATO Stock Number (NSN).

6.1.3. The CF271 forms' file name must correspond to the item listed within, either by its part number or NSN (example: CF271 9422-01-552-8836.xls).

6.2. **HARD COPY FORMAT**

6.2.1. The ILSS designs must be printed on paper with these characteristics:

6.2.1.1. Standard US Ledger size (432 mm x 279 mm)
6.2.1.2. Weight of no less than 90 gsm;
6.2.1.3. Brightness of no less than 92 ISO brightness;

6.3. **SOFT COPY FORMAT**

6.3.1. The ILSS must be provided as PDF files.

6.3.2. The ILSS PDFs containing text and illustrations in landscape, must be rotated for electronic viewing and reading in landscape.

6.3.3. The CF271 Packaging Codes must be provided as an MS Excel Spreadsheet file.

6.3.4. **Soft Copy format submission size below 7MB** – The ILSS and Packaging Codes must be submitted via email as follows:

6.3.4.1. To Field: As per the related CDRL section 9.A. Addressee, as identified in the contract.

6.3.4.2. Subject Field: WTS-ILS-222 – Identification Labels for Storage and Shipment and Packaging Codes – [Rev #] – [Date of Issue]

6.3.5. **Soft Copy format submission size at or above 7MB** – The ILSS and Packaging Codes files must be submitted on CD or DVD media and be labelled as follows:

6.3.5.1. Water Treatment System
6.3.5.2. Identification Labels for Storage and Shipment and Packaging Codes
6.3.5.3. WTS-ILS-222;
6.3.5.4. The Revision number, and
6.3.5.5. The date of issue.

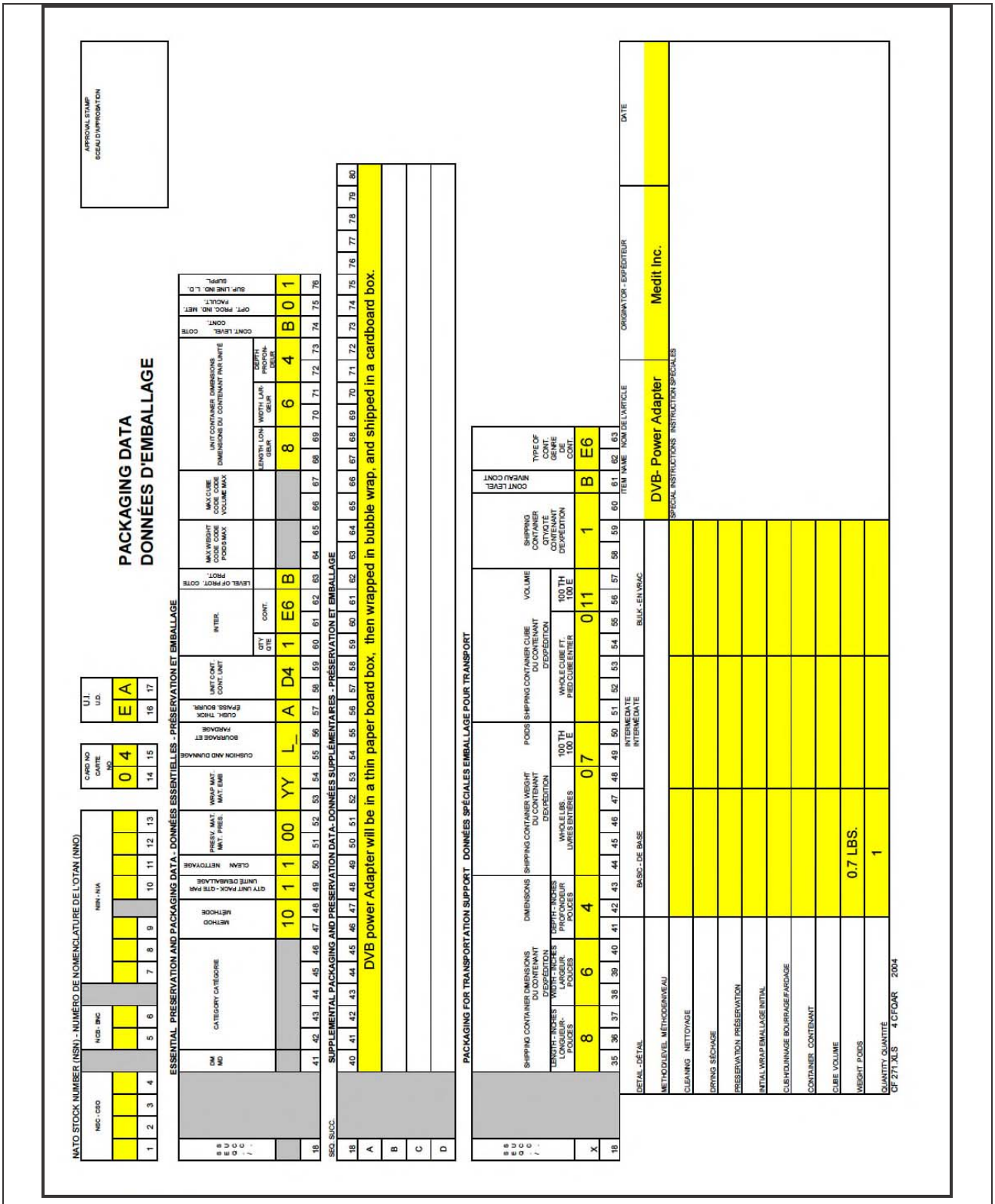

Table 1: Sample CF271 form

A3.39 DID – List of Items to be Supported

DATA ITEM DESCRIPTION	
1. TITLE **List of Items to be Supported**	2. IDENTIFICATION NUMBER DID WTS-ILS-223
3. DESCRIPTION The List of Items to be Supported (LIS) will provide the repairable/consumable item data, software items and technical data, which will be supported once the system is delivered. DND will use this information, along with the provisioning data, to populate the Support SOW Appendix A1.0 tables.	
4. RELATED DOCUMENTS	5. CONTRACT REFERENCE SOW: **Para 8.10.1 (pg.51)** CDRL: **App. A2.39 (pg.154)**

6. PREPARATION INSTRUCTIONS

6.1. **CONTENT**

6.1.1. The LIS must provide an overview and understanding to DND on how the WTS and its associated equipment will be supported once the WTS is delivered; refer to the Support SOW for further information.

6.1.2. The LIS must provide the following completed tables, stemming from the Concept of Operation & Support (IAW the Support SOW), and IAW the **Maintenance Concept** ANNEX A1 paragraph 8.1 (pg. 43):

6.1.2.1. Supported Repairable-Consumable Equipment and Spares Table – This includes the repairable equipment or components of the complete system, STTE, and consumable equipment.

6.1.2.2. Supported Software Items Table – This includes all provided software, such as software resident in the Repairable Items or information systems.

6.1.2.3. Supported Technical Data Table – This includes the Technical Data and publications, and training material for which the Contractor will provide support.

6.2. **GENERAL FORMAT**

6.2.1. The LIS must be prepared as an MS Word document with tables.

6.3. **SOFT COPY FORMAT**

6.3.1. The LIS must be provided as an MS Word file.

6.3.2. **Soft Copy format submission size below 7MB** – The LIS may be submitted via email as follows:

6.3.2.1. To Field: As per the related CDRL section 9.A. Addressee, as identified in the contract.

6.3.2.2. Subject Field: WTS-ILS-223 – LIS – [Rev #] – [Date of Issue]

6.3.3. **Soft Copy format submission size at or above 7MB** – The LIS file must be submitted on CD or DVD media and be labelled as follows:

6.3.3.1. Water Treatment System

6.3.3.2. LIS

6.3.3.3. WTS-ILS-223;

6.3.3.4. The Revision number, and

6.3.3.5. The date of issue.

Supported Repairable-Consumable Equipment and Spares Table

An explanation of each column is detailed below: Note: Column 1 through 5 are standard, and will apply to all Support SOWs; columns 6 through 8 are optional and should be tailored or removed as needed once the Support concept and Support SOW are written.

1. System Identifier MRN/OEM Part No – A unique identifier for the Item, as used in the applicable technical manuals or supply management system.

2. Item Nomenclature – The name of the Item that may include Item class/group categories and functional descriptors.

3. NATO Stock Number (NSN) – The 13-digit identifier used in NATO and allied cataloguing systems. The NSN will be included if the Item is to be ordered by DND.

4. Regular or Free-Flow R&O by Item

   Repair Cost Estimate (RCE) – Identifies that the item will require a cost estimate before repairs or overhaul can begin.

   > This is used for regular R&O when equipment is more complex so the TA requires more visibility on what is being proposed, has not yet reached steady-state and is therefore harder to predict typical repair costs/requirements, and repairs occur infrequently.

   Maximum Repair Cost (MRC) – Identifies the maximum amount authorized that includes all labour and material costs, to be expended to repair an item. Repairs above the MRC must be approved by DND before any repair or overhaul work commences. Standard Selection Notice Observation Message procedures as detailed in A-LM-184-001/JS-001 must apply.

   > This is used for free-flow R&O when equipment repairs are well understood or are less complex, and is used for repairs that occur at a high rate.

5. Repair Turn-Around-Time (TAT) – Identifies the Repair TAT, if different from the general Repair TAT, as defined in Support SOW at para. 4.1.4.1, indicating that this item is of greater importance to the operation of the WTS and therefore requires a faster turn-around. Repair TAT is indicated in calendar days; if left blank, then general Repair TAT is followed.

6. Fleet Support Spares (FSS) quantity to hold – Describes the quantity of each item that the Contractor will hold and maintain, or left blank, if item does NOT have a required sparing level quantity or category isn't applicable.

   FSS are used to support the fleet, both domestically or while on deployment, and can be used by Contractor FSRs during repair tasking, for faster TAT during R&O, and in 'repair by replacement' situations, where the repair can be done in the field or when parts are required so rarely that they would not be stocked in depot, and the cost is minimal compared to the transport cost of shipping equipment back for R&O Maintenance Support at the Contractor's site.

7. Operational Spares Kits – Base Operating Spares Kit (BOSK) – Describes the collection of operational deployment spares, and quantities of each item, held in reserve in pre-positioned storage. If left blank the item is not included in the operational spares kits or category isn't applicable.

   BOSK(s) are held domestically with DART at CFB Trenton, and in operation will be deployed to a base which supports the forward deployments.

8. Detailed Inspection & Maintenance / Detailed Inspection & Equipment Rotation – Indicates which items will require a detailed inspection and maintenance / detailed inspection & equipment rotation, performed by the Contractor, following the manufacturer's instructions for use and inspection.

a. Detailed Inspection & Maintenance (Insp. Maint.)
   i. 'Y – WTS Equip. QTY' = yes, detailed inspection & maintenance required for the listed quantity of WTS Equipment.
b. 'N' or blank = no.

NOTE: INFORMATION IN THIS TABLE WILL BE FINALIZED AFTER DELIVERY AND ACCEPTANCE OF THE PROVISIONING DOCUMENTATION.

Item Identifier MRN/OEM Part No. (1)	Item Nomenclature (2)	NSN (if item can be ordered) (3)	Regular or Free-Flow RCE/MRC (4)	Repair TAT (cal. Days) (5)	Fleet Support Spares (Qty. to hold) (6)	Operational Spares Kits (7) BOSK Qty.	Insp. Maint. (Y – WTS Equip. QTY) (8)
	Water Treatment Unit (WTU)		RCE		2 (GFE - will be provided by DND from existing stock)		Insp. Maint. Y – Qty 26 in: 37 CER, 36 CER, 4 ESR, CFSME ,35 RGC, 5 RGC, 2 AETS, 34 RGC, 33 CER, 2 CER, DART, 32 CER 31 CER, 38 CER, 4 CES, 1 CER, 41 CER, 39 CER and OEM
	Miscellaneous Equipment Unit (MEU)		RCE		2 (GFE - will be provided by DND from existing stock)		Insp. Maint. Y – Qty 26 in: 37 CER, 36 CER, 4 ESR, CFSME ,35 RGC, 5 RGC, 2 AETS, 34 RGC, 33 CER, 2 CER, DART, 32 CER 31 CER, 38 CER, 4 CES, 1 CER, 41 CER, 39 CER and OEM
	Trailer		RCE		2 (GFE - will be provided by DND from existing stock)		Insp. Maint. Y – Qty 24 in: 37 CER, 36 CER, 4 ESR, CFSME ,35 RGC, 5 RGC, 2 AETS, 34 RGC, 33 CER, 2 CER, DART, 32 CER 31 CER, 38 CER, 4 CES, 1 CER, 41 CER, 39 CER and OEM

Item Identifier MRN/OEM Part No. (1)	Item Nomenclature (2)	NSN (if item can be ordered) (3)	Regular or Free-Flow RCE/MRC (4)	Repair TAT (cal. Days) (5)	Fleet Support Spares (Qty. to hold) (6)	Operational Spares Kits (7) BOSK Qty.	Insp. Maint. (Y – WTS Equip. QTY) (8)
	Arctic Sustainment Unit (ASU)		RCE				Insp. Maint. Y – Qty 7 in: CFSME, 4 ESR, 5 RGC, 2 AETS, 2 CER, 4 CES and 1 CER.
	Water Storage Unit (WSU)		RCE				Insp. Maint. Y – Qty 37 in: 37 CER, 36 CER, 4 ESR, CFSME, 5 RGC, 2 AETS, 35 RGC, 34 RGC, 33 CER, 2 CER, 1 Fd Hosp, 1 Wing, CJOC Kingston, DART, 32 CER, 31 CER, 38 CER, 4 CES, 1 CER, 41 CER, 39 CER
Ancillary Equipment:							
	Feed Water Hose				10	4	
	Concentrate Water Hose				10	4	
	Potable Water Hose				10	5	
	Hose spare parts kit, to include cap, o ring, lanyard, repair kit				10	5	
	Water Distribution Nozzle				2	1	
	Feed Pump				5	1	
	Distribution Pump				5	1	
	Water Storage Tank				5	2	
	Spill Kit				2	1	
	Tool kit				2	1	
	Safety equipment, to include goggle, work gloves, latex gloves, mask, hear protector				5	2	
	Rope 3/8'' x 50'				2	1	
	Intake Strainer + floatation Assembly				5	1	
	Exhaust Hose for Generator Set				5	1	
	Life Preserver Vest				2	1	
	Wading Overall				2	1	
	Water Quality Analysis Kit				5	1	

Item Identifier MRN/OEM Part No. (1)	Item Nomenclature (2)	NSN (if item can be ordered) (3)	Regular or Free-Flow RCE/MRC (4)	Repair TAT (cal. Days) (5)	Fleet Support Spares (Qty. to hold) (6)	Operational Spares Kits (7) BOSK Qty.	Insp. Maint. (Y – WTS Equip. QTY) (8)
	Turbidity Verification Kit				3	1	
	Reverse Osmosis (RO) membranes				10	5	
	RO preservation container				5	0	
	Glycerine (gallon)				10	2	
	Filtration element other than RO				5	2	
	Chemicals (30 days deployment)				5	3	
	Replacement Valve (of each kind)				2	1	
	NATO Hose fittings kit				5	1	
	Manuals and Reference card last edition (of each)				2	1	
	Generator set (repair parts for 90 days deployment)				2	1	
	High pressure pump				5	1	
	Repair Valve part kit (of each)				10	1	
	Meter Analyser + harness (of each)				5	1	
	Pressure Gage + Harness (of each)				5	1	
Cold Weather Ancillary Equipment:							
	Electrically-Heated Feed Water Hoses				5	1	
	Electrically-Heated Concentrate Hoses				5	1	
	Electrically-Heated Potable Water Hoses				5	2	
	Feed Water Pump Electrically-Heated Blanket				5	2	
	Distribution Pump Electrically-Heated Blanket				5	2	
Trailer Electrical Components:							
	Front Harness				10	1	
	Mid Main Harness				5	1	
	Rear Harness				5	1	
	LED Markers				10	1	
	LED SMP Taillight				10	1	
	LED Licence Plate Lamp				10	1	
Trailer Axle Components:							
	Axle Assembly				3	0	

Item Identifier MRN/OEM Part No. (1)	Item Nomenclature (2)	NSN (if item can be ordered) (3)	Regular or Free-Flow RCE/MRC (4)	Repair TAT (cal. Days) (5)	Fleet Support Spares (Qty. to hold) (6)	Operational Spares Kits (7) BOSK Qty.	Insp. Maint. (Y – WTS Equip. QTY) (8)
	Wheel Assembly				10	0	
	Tire				20	0	
	Wheel Bearings				20	0	
Trailer Brake Components:							
	Brake Drum				5	1	
	Brake Shoe				5	1	
	Air Chamber				2	1	
	Air Reservoir				2	1	
	Coiled Air Hose				2	1	
	Function Valve				2	1	
	Brake Adjusters				2	1	
Trailer Suspension Components:							
	Spring Assembly				5	1	
Trailer Structural Frame:							
	Landing Gear				10	1	
	Drawbar Assembly				5	1	

Supported Software Items Table

An explanation of each column is detailed below: Note: Column 1 through 3 are standard, and will apply if there is software to support, columns 4 through 5 are optional and should be tailored or removed as needed once the Support concept and Support SOW is written.

1. Identifier MRN/OEM Part No – A unique identifier for the Item of software, or the hardware that it is hosted on.
2. Item Nomenclature – The name of the Item that may include Item class/group categories and functional descriptors.
3. Software version number – The version or revision number of the software item.
4. SW Update – Requires software updates to DND/CAF (e.g., may be part of regular upgrade program or to incorporate third party updates) IAW the Support SOW ('Y' = yes, 'N' or blank = no).
5. Help Desk – Included with Help Desk support for DND/CAF, IAW the Support SOW, for this software ('Y' = yes, 'N' or blank = no).

NOTE: INFORMATION IN THIS TABLE WILL BE FINALIZED AFTER DELIVERY AND ACCEPTANCE OF THE TECHNICAL PUBLICATIONS.

Identifier MRN/OEM Part No. (1)	Item Nomenclature (2)	Software Version Number (3)	SW Update (Y/N) (4)	Help Desk (Y/N) (5)

Supported Technical Data Table

An explanation of each column is detailed below: Note: include all the technical publications and other relevant ILS documents from the SOW that you want the Support Contractor to maintain up to date after configuration management changes or obsolescence.

1. Publication Number – The unique identifier for the published Item of Technical Data.
2. Title – The title of the item of Technical Data.

NOTE: INFORMATION IN THIS TABLE WILL BE FINALIZED AFTER DELIVERY AND ACCEPTANCE OF THE TECHNICAL PUBLICATIONS.

Publication Identifier (1)	Title (2)
TBD	WTS OPERATOR MANUAL
TBD	WTU OPERATOR QUICK REFERENCE CARD
TBD	WTS MAINTENANCE MANUAL
TBD	WTS PERMISSIVE REPAIR SCHEDULE AND STANDARD REPAIR TIMES
TBD	WTS ILLUSTRATED PARTS MANUAL
TBD	WTS OPERATOR TRAINING PACKAGE
TBD	WTU AND ASU TECHNICIAN TRAINING PACKAGE
TBD	WTS PRESERVATION, STORAGE AND REACTIVATION INSTRUCTIONS
TBD	WTS STOWAGE, SHIPPING AND HANDLING INSTRUCTIONS
TBD	WTS DATA SUMMARY
TBD	MEU AND ASU STOWAGE MAP POSTERS
TBD	WTU PROCESS AND FLOW DIAGRAMS
TBD	PROVISIONING PARTS BREAKDOWN
TBD	SUPPLEMENTARY PROVISIONING TECHNICAL DOCUMENTATION
TBD	SPECIAL TOOL & TESTING EQUIPMENT
TBD	IDENTIFICATION PLATES
TBD	CONTROLLED & NON-CONTROLLED GOODS LIST
TBD	IDENTIFICATION LABELS FOR STORAGE AND SHIPMENT AND PACKAGING CODES

A3.40 **DID – Warranty Support Plan**

DATA ITEM DESCRIPTION	
1. TITLE **Warranty Support Plan**	2. IDENTIFICATION NUMBER DID WTS-ILS-224
3. DESCRIPTION The Warranty Support Plan (WSP) identifies and documents the elements that compose the Warranty Support for the WTS, and provides the framework and strategy to meet Warranty Support obligations.	
4. RELATED DOCUMENTS **C-01-100-100/AG-008:** *Writer's Guide for Technical Documentation*	5. CONTRACT REFERENCE SOW: **Paragraph 8.12.1 (pg.52)** CDRL: **App. A2.40 (pg.155)**

6. PREPARATION INSTRUCTIONS

6.1. **CONTENT**

6.1.1. The Warranty Support Plan's (WSP) subject matter must include, but not be limited to, a detailed discussion on the following:

6.1.1.1. An introduction with a stated purpose and scope.

6.1.1.2. A description of the warranty section. A key point of contact with the Contractor for warranty support matters must be identified.

6.1.1.3. Detailed summary of what is covered under the WTS's standard warranty including applicable terms and conditions, such as parts and labour, time, usage, and maintenance servicing requirements.

6.1.1.4. Complete warranty control procedures including, but not necessarily limited to, the following:

6.1.1.4.1. Interfacing actions between Contractor and Canada for initiating a warranty action and shipping instructions;

6.1.1.4.2. Procedures followed for the evaluation of defective warrantable items, including ILS publications;

6.1.1.4.3. Procedures to be followed where warranty claims are not substantiated, but DND elects to have the item repaired and returned to service by the Contractor;

6.1.1.4.4. Details relating to the Contractor's disposal of unserviceable warrantable components;

6.1.1.4.5. How the Contractor will compensate DND for effecting warranty repairs on the Contractor's behalf;

6.1.1.4.6. How the Contractor will notify Canada of recalls, emerging safety issues, and other urgent matters the Contractor gains knowledge of concerning the Work.

6.1.1.4.7. How the Contractor will report and correct discrepancies or amend information within the ILS documentation and the dissemination of those amendments and corrections; and,

6.1.1.4.8. How the Contractor will report all closed warranty claims and the status of open claims.

6.1.1.5. Terms and conditions of the packaging warranty coverage;

6.1.1.6. Details of the process (detailed steps) to be followed to action a warranty claim for repairs performed by the contractor;

6.1.2. Each topic of discussion must be addressed in a manner that clearly identifies any documentation or information required from DND.

6.1.3. Any documentation used in Warranty Support activities must be identified and templates included as part of the Warranty Support Plan as Appendices.

6.2. **GENERAL FORMAT**

6.2.1. The WSP must be prepared in the Contractor's format while conforming to the latest issue of C-01-100-100/AG-008.

6.3. **HARD COPY FORMAT**

6.3.1. The WSP must be printed on paper with these characteristics:

6.3.1.1. Weight of no less than 90 gsm;

6.3.1.2. Brightness of no less than 92 ISO brightness;

6.4. **SOFT COPY FORMAT**

6.4.1. The WSP must be provided as

6.4.2. **Soft Copy format submission size below 7MB** – The WSP may be submitted via email as follows:

6.4.2.1. To Field: As per the related CDRL section 9.A. Addressee, as identified in the contract.

6.4.2.2. Subject Field: WTS-ILS-224 – Warranty Support Plan – [Rev #] – [Date of Issue]

6.4.3. **Soft Copy format submission size at or above 7MB** – The WSP file must be submitted on CD or DVD media and be labelled as follows:

6.4.3.1. Water Treatment System

6.4.3.2. Warranty Support Plan

6.4.3.3. WTS-ILS-224;

6.4.3.4. The Revision number, and

6.4.3.5. The date of issue.

A3.41 DID – Equipment Environmental Assessment

DATA ITEM DESCRIPTION	
1. TITLE **Equipment Environmental Assessment (EEA)**	2. IDENTIFICATION NUMBER **DID WTS-ILS-225**
3. DESCRIPTION The EEA identifies and documents potential environmental impacts of the equipment over the entire life-cycle and the associated mitigation measures required to reduce or eliminate them.	
4. RELATED DOCUMENTS	5. CONTRACT REFERENCE **SOW**: **Para.** Error! Reference source not found. **(pg.** Error! Bookmark not defined.**)** **CDRL**: **App. A2.41 (pg. 156)**

6. PREPARATION INSTRUCTIONS

6.1. **CONTENT**

6.1.1. **Title Page**

6.1.1.1. Equipment Name and NSN (if available).

6.1.1.2. Assessment Contact: Name, title and company name of the author of the EEA.

6.1.2. **Executive Summary**

6.1.2.1. Provide a brief summary of potential environmental impacts and recommended mitigation measures for each life-cycle (test and evaluation following production, operation and maintenance, and demilitarization and disposal).

6.1.3. **Equipment Description**

6.1.3.1. Equipment description: Provide an overview of the equipment and identify each major sub-system as per the Equipment Breakdown Structure.

6.1.3.2. For each major sub-system, identify the following:

6.1.3.2.1. Ionizing radiation sources (radioisotopes and x-ray). e.g. Uranium, Radon, plutonium and tritium etc.

6.1.3.2.2. Non-ionizing radiation sources (radiofrequency and lasers).

6.1.3.2.3. Identify toxic substances that are incorporated into the equipment design. Provide additional information in tabular form in ANNEX A.

6.1.3.2.4. Identify chemical products listed in ANNEX B.

6.1.3.2.5. Provide Safety Data Sheets (SDS) that are less than three years old for all chemical products in accordance with WHMIS 2015 requirements in Annex C for all chemical products.

6.1.4. **Environmental Assessment**

6.1.4.1. For each lifecycle phase (test and evaluation following production, operation and maintenance, and demilitarization and disposal) discuss the following:

6.1.4.1.1. Lifecycle activities: Describe anticipated activities (including operator and maintenance tasks that are detailed in Contractor provided Technical Documentation) and identify if any of these activities have the potential to: release a polluting substance to air, water or land (e.g. exhaust emissions, hazardous waste, spills, etc.); impact human health; noise or vibration; and/or alter landscape features. Note: The scope of the EEA excludes activities related to the use of munitions.

6.1.4.1.2. Environmental impacts: Describe the potential environmental impacts identified above.

6.1.4.1.3. Mitigation Measures: Describe mitigation measures to eliminate or reduce identified potential environmental impacts, including those that are part of the design, any warning devices, emission control equipment, spill response, safe handling and disposal procedures, training, PPE, labels on equipment, cautions and warnings in the Technical Documentation, monitoring or inspections, etc.

6.1.5. **Conclusions and Recommendations**

6.1.5.1. Summarize the main environmental impacts and recommended mitigation measures.

6.1.6. **References**

6.1.6.1. List references consulted in the completion of the EEA (such as Canadian legislation, DND policies and procedures, technical documentation, etc.).

6.1.7. **ANNEX A - List of Toxic Substances in the Equipment**

Toxic Substance	NSN	Original OEM Part Number	Item Description	Location	Additional Details
Antimony, Arsenic, Beryllium, Brass, Bronze, Chromium VI, Cobalt, Copper, Lead, Precious and radioactive metals					
Halocarbons					Type and weight (kg). Global Warming Potential of Hydrofluorocarbons used for refrigerant applications.
Ionizing radiation					Type and quantity or activity level
Mercury and its compounds					Product Category, form of mercury (e.g. liquid, vapour) and weight (mg)
Non-ionizing radiation					Type of electromagnetic energy (laser, microwave, radio frequency) and strength
Polychlorinated Biphenyl					Form (liquid or solid), quantity (kg), volume (L) and concentration in ppm

Note: Provide information on the presence of other metals, metal coatings, surface treatments, etc.

6.1.8. **ANNEX B – List of Chemical Products**

Chemical Product	NSN	Product Part Number / Manufacturer	Ingredient	Chemical Abstract Service Number	Controls*
Adhesives, anti-seize, batteries, solvents, cleaners and degreasers, compressed gases, corrosion inhibitor, cutting fluid, decontaminant, desiccant, detector kit, fire extinguishing agent, fuel, grease, inspection penetrant, lubricants, paints and related commodities (CARC topcoat, CARC primer, CARC wash-primer, sealants.					

*Controls: Identify if the substance is regulated under the Canadian Environmental Protection Act, 1999; targeted in Schedule 1, Toxic Substance List under CEPA and/or subject to the reporting requirements under the National Pollutant Release Inventory (NPRI).

6.1.9. **Annex C – Safety Data Sheets SDS for all chemical products identified in the EEA**

6.2. **SOFT COPY FORMAT**

6.2.1. The EEA must be provided as a PDF file.

6.2.2. **Soft Copy format submission size below 7MB** – The EEA may be submitted via email as follows:

6.2.2.1. To Field: As per the related CDRL section 9.A. Addressee, as identified in the contract.

6.2.2.2. Subject Field: WTS-ILS-225 – EEA – [Rev #] – [Date of Issue]

6.2.3. **Soft Copy format submission size at or above 7MB** – The EEA file must be submitted on CD or DVD media and be labelled as follows:

6.2.3.1. Water Treatment System

6.2.3.2. EEA

6.2.3.3. WTS-ILS-225;

6.2.3.4. The Revision number, and

6.2.3.5. The date of issue.

A4.0 APPENDIX: COMMERCIAL (OEM) ENGINEERING DRAWINGS AND ASSOCIATED LISTS

A4.1 General

A4.1.1 The Contractor must provide Engineering Drawings, Associated Lists and Reference Documents IAW the following requirements and in the final form specified below.

A4.1.2 **Technical Data Action Notice (TDAN) Number**

A4.1.2.1 A TDAN number will be assigned to control the acquisition of all Engineering Drawings and Associated Lists produced under this contract. TDAN numbers will be assigned upon request by DSCO 4-6 individually as required.

A4.1.3 **New and Existing Drawings**

A4.1.3.1 When required, the Contractor must prepare and deliver new Engineering Drawings and Associated Lists which meet the design disclosure and legibility requirements of the specified level as defined by the Canadian Forces Engineering Drawings and Associated Lists specification D-01-400-002/SF-000.

A4.1.3.2 Existing Contractor Drawings being provided as part of the Engineering Drawing Package must meet the requirements of paragraph 3.2 of D-01-400-002/SF-000. In the event that Contractor Drawings do not meet the specified requirements the Contractor must rework the drawings to ensure that the requirements are met.

A4.1.3.3 Drawing Levels

A4.1.3.3.1 Level 1 – Conceptual and Developmental Design

A4.1.3.3.2 Level 2 – Production Prototype and Limited Production

A4.1.3.3.3 Level 3 – Production

A4.1.4 **Drawing Practices**

A4.1.4.1 Drawing practices must be IAW ASME Y14.100.

A4.1.5 **Data Rights Legend**

A4.1.5.1 The Contractor must mark all Foreground & Background Engineering Drawings & Associated Lists delivered under this contract with the following notation, that pertains to the “Intellectual Property Rights” and/or “Data Rights” clause(s) of the contract:

A4.1.5.1.1 Intellectual Property (IP) in Foreground that belongs to the Contractor: “© (insert year) (insert IP owner). This deliverable was delivered under Contract no. XXXX and contains Foreground Intellectual Property (IP). Her Majesty the Queen in Right of Canada has a royalty-free and perpetual license to the IP and is permitted to use, reproduce, modify, and translate, including authorizing contractors to reproduce, modify, and translate, in whole or in part the deliverable for all government purposes

including competitive tendering. Refer to the contract terms for additional details as required."

A4.1.5.1.2 Intellectual Property (IP) in Background Information: "© (insert year) (insert IP owner). This deliverable was delivered under Contract no. XXXX and contains Background Intellectual Property (IP). Her Majesty the Queen in Right of Canada has a royalty-free and perpetual license to the Background IP for the purpose of exercising its rights in the Contract deliverables and Foreground Information. The license includes the rights to use, reproduce, modify, and translate this deliverable, and further includes the right to authorize others to use, reproduce, modify, and translate, in whole or in part the deliverable for all government purposes including competitive tendering. Refer to the contract terms for additional details as required."

A4.2 Data Lists

A4.2.1 The Contractor must provide Data Lists complete with Cover Sheets, prepared IAW ASME Y14.34M and supplied along with the Engineering Drawings. Data Lists must be prepared at the item level of assembly (and/or end item) declared for future production by the Technical Authority. Cover sheets must be prepared as sheet one (1) of the Data List. Cover Sheets must include the Contract Number and a note which details the **Intellectual Property Rights** that apply to the data identified on the Data List, see para. A4.1.5.

A4.3 Reference Documents

A4.3.1 The Contractor must include reference documents called up on the Engineering Drawings (excepting those, which are government, society and readily available industrial specifications or standards) as part of the Engineering Drawings and Associated Lists.

A4.4 TDAN

A4.4.1 The Contractor must prepare a TDAN listing all Drawings and Associated Lists delivered as a result of the contract. A sample TDAN can be provided upon request.

A4.5 Drawing System

A4.5.1 The Contractor must use a mono-detail drawing system.

A4.6 Drawing Types

A4.6.1 The Contractor must provide the necessary types of drawings that will satisfy the sophistication of the specified drawing level. Drawing types selected must be IAW ASME Y14.24. Type selection must be subject to the approval of both the DND Technical Authority and DSCO 4-6.

A4.7 Control Drawings

A4.7.1 The Contractor must prepare Control Drawings as defined in ASME Y14.24, for commercial items approved for use in the design, which are not defined by Government or nationally recognized industrial specifications and standards.

A4.8 Family-Tree Drawing(s)

A4.8.1 When required, the Contractor must prepare Family-Tree Drawing(s) of the complete configuration of the Engineering Drawing Package and it must be subject to the approval of both the DND Technical Authority and DSCO 4-6.

A4.9 Units of Measure

A4.9.1 The DND Technical Authority will determine the units of measure (metric or Imperial).

A4.9.2 Metric drawings produced by the Contractor must comply with ASTM SI10 American National Standard for Metric Practice.

A4.10 Controlled Goods Identification

A4.10.1 The Contractor must mark all drawings and Associated Lists with the appropriate Controlled Goods Identification. These e-stamps can be obtained from DSCO 4-6. The DND Technical Authority will determine the Controlled Good status of the drawings and lists.

A4.11 Integration

A4.11.1 The Contractor must integrate the new and existing drawings to form a complete Engineering Drawing Package.

A4.12 Quality Assurance Provisions

A4.12.1 Quality of the Engineering Drawings and Associated Lists delivered on this contract is the responsibility of the Contractor and subject to the quality requirements of the contract.

A4.12.2 **Acceptance**

A4.12.2.1 Acceptance of the Engineering Drawings, Associated Lists and Reference Documents for technical content requirements will be the responsibility of the DND Technical Authority. Acceptance of the Engineering Drawings, Associated Lists, Reference Documents and Electronic Data Deliverables for format requirements will be DSCO 4-6.

A4.12.3 **Interim Deliverables for Acceptance Purposes**

A4.12.3.1 Level 1 – Conceptual and Developmental Design

A4.12.3.1.1 The Contractor must provide Level 1 Engineering Drawings, Associated Lists and Reference Documents to the Technical Authority upon completion.

A4.12.3.2 Level 2 – Production Prototype and Limited Production

A4.12.3.2.1 Following acceptance of the Level 1 Engineering Drawings, Associated Lists and Reference Documents, the Contractor must provide Level 2 Engineering Drawings, Associated Lists and Reference Documents to the Technical Authority.

A4.13 Final Deliverable

A4.13.1 Upon acceptance, the Contractor must provide Level 2 Engineering Drawings, Associated Lists and Reference Data in soft copy form as outlined herein.

A4.13.2 **Soft Copy Deliverables**

A4.13.2.1 The Contractor must include the Engineering Drawings, Associated Lists, Reference Data and the associated Metadata in electronic form, in the provided soft copy deliverables.

A4.13.3 **Engineering Drawings**

A4.13.3.1 The Contractor must provide Engineering Drawings as a PDF file (Raster) as detailed herein. Multi-sheet drawings must be delivered as one file.

A4.13.4 **Associated Lists**

A4.13.4.1 The Contractor must provide Associated Lists as a PDF file.

A4.13.5 **Reference Documents**

A4.13.5.1 The Contractor must provide Reference Documents as a PDF file.

A4.13.6 **TDAN**

A4.13.6.1 The Contractor must provide the TDAN, complete with contractor's signature, as a PDF file, with the final deliverables.

A4.13.7 **Metadata (Capture of Related Information)**

A4.13.7.1 The Contractor must provide Metadata for all Engineering Drawing and Associated List deliverables. Metadata records must contain the information shown in Table 1 below. Metadata must be delivered as a Microsoft Access database shown at Figure 1 below.

A4.13.8 **Database Table**

A4.13.8.1 The Contractor must deliver each file with a corresponding database record. Metadata for both Raster and Vector files must be prepared when applicable.

A4.13.8.2 The Contractor must enter all records into a single Microsoft Access database table. Fields without corresponding information must remain blank.

A4.13.8.3 The Contractor must name the Microsoft Access database file with the Batch number (see Table 1 - Index Fields).

A4.14 File Formats for Raster Data

A4.14.1 The Contractor must provide raster image data in PDF format, and meet the following requirements:

A4.14.2 **Image Size**

A4.14.2.1 Raster images for drawings/associated lists must retain the sheet size of the Master/Native file.

A4.14.3 **Image Colour**

A4.14.3.1 Images must be black on white background.

A4.14.4 **File Names/Batch Number Allocation**

A4.14.4.1 File names must be made up from the document number by adding a prefix (L for LAND, A for AIR and M for MARITIME). Batch numbers must be requested from DSCO 4-6.

TABLE 1 INDEX FIELDS

Order	Field Name	Max Field Length	Field Definition / Description	Example Entry
1	**FILENAME** *(all one word)*	12 (8.3)	Name of electronic file - unique filename for uploading in database. Alpha characters must be uppercase.	**L9775457-1.PDF**
2	**BATCHNO** *(all one word)*	8	Batch number - used for uploading files in database. Batch number will be issued by DSCO 4-6. Alpha characters must be uppercase.	**LZ001**
3	**DOCUMENTNO** *(all one word)*	25	This field must contain the document number.	**9775457**
4	**REVISION**	3	Letter or number indicating the revision level. If there is no rev, indicate with dash ("-")	**B**
5	**SHEETNO** *(all one word)*	3	Sheet number x to y.	**1-5**
6	**NOOFSHEETS** *(all one word)*	3	Sheet number x to y. Enter the value of y	**5**
7	**FRAMENO** *(all one word)*	3	This field must be left blank.	
8	**NOOFFRAMES** *(all one word)*	3	This field must be left blank.	
9	**NSCM**	5	This field must contain the NATO Supply Code for Manufacturers (NSCM) of the Owner of the data. (Also known as FSCM, CAGE or NCAGE code.)	**35907**
10	**SIZE**	2	This field contains the document size. -For imperial sizes use A, B, C, D, E, F, G, H, J, K and LE (for legal) -For metric sizes use A4, A3, A2, A1, A0 and B1.	**A2**

11	**ADDITIONALIDENTIFIER** (*all one word)*	10	This open field must be used when two (2) or more documents have the same document number but are different documents. e.g. Document 12345, Document 12345 DCR 001, then “DCR 001" would be entered in this field. When field is not applicable, leave blank.	**DCR-001**
12	**DATARIGHTS** *(all one word)*	1	The data rights as specified in the contract. "L" for “LIMITED” or “U" for "UNLIMITED”	**U**
13	**DOCUMENTTITLE** *(all one word)*	240	Title of document. (i.e. Drawing title)	**BRACKET ASSY**
14	**TDANNO** *(all one word)*	12	This field must be used to enter the TDAN number assigned for the project.	**174471XXX**
15	**ERN**	12	This field must be used for the Equipment Registration Number (ERN).	**30-650-000**
16	**EAC**	8	This field must be left blank.	
17	**EQUIPMENT**	75	Name of the Equipment.	**BISON**
18	**CTAT**	1	If the data is “Not Controlled”, DM Code “A” must be entered. If the data is “Controlled Goods”, DM Code “D” must be entered.	**A or D**
19	**PROJECTNAME**	30	This field is filled in by DSCO 4-6. This field must be left blank.	

FILENAME	BATCH NO	DOCUMENT NO	REVI SION	SHEET NO	NO OF SHEE TS	FRA ME NO	NO OF FRAMES	NSCM	SIZE	ADDITIONAL IDENTIFIER	DATA RIGHTS	TDANNO	DOCUMENTTITLE	ERN	EAC	EQUIP	CTAT	PROJECTNAME
LDL-9775457-1.pdf	LZ001	DL-9775457-1	-	1-2	2			35907	A4		U	174471137	BRACKET ASSY				A	
LDL-9775457-1.doc	LZ001	NATDL-9775457-1	-	1-2	2			35907	A4		U	174471137	BRACKET ASSY				A	NATIVE FILES
L9775457.pdf	LZ001	9775457	-	1-5	5			35907	A1		U	174471137	BRACKET ASSY				A	
L9775457.dwg	LZ001	NAT9775457	-	1-5	5			35907	A1		U	174471137	BRACKET ASSY				A	NATIVE FILES
L9775458.pdf	LZ001	9775458	-	1	1			35907	A0		U	174471137	BRACKET ASSY				A	
* L9775457.zip	LZ001	NAT9775457	-	1	1			35907	1		U	174471137	BRACKET ASSY				A	NATIVE FILES

*Combine 3D CAD native files (Solid Works, Solid Edge, Inventor…) in .zip file using the top level drawing number as the file name.

File Naming Convention

File Name	Description
LDL-9775457-1.pdf	Data List no DL-9775457-1, Sheet 1 to 2, Rev -
LDL-9775457-1.doc	Data List no DL-9775457-1, Sheet 1 to 2, Rev -
L9775457.pdf	Drawing no 9775457, Sheet 1 to 5, Rev -
L9775457.dwg	Drawing no 9775457, Sheet 1 of 5, Rev -
L9775458.pdf	Drawing no 9775458, Sheet 1 of 1, Rev -
L9775457.zip	*Native CAD Model Files, all files & sheets, Rev -

Filename Prefixes

A, L or M9775457.pdf [(A)ir, (L)and or (M)aritime + 9775457 = Document Number]

FIGURE 1 METADATA EXAMPLE (New Drawings & Associated Lists)

FILENAME	BATCH NO	DOCUMENT NO	REVISION	SHEET NO	NO OF SHEETS	FRAME NO	NO OF FRAMES	NSCM	SIZ E	ADDITIONAL IDENTIFIER	DATA RIGHTS	TDANNO	DOCUMENTTITLE	ERN	EAC	EQUIP	CTAT	PROJECTNAME

LDL-9775457-1-A.pdf	LZ001	DL-9775457-1	A	1-2	2			35907	A4		U	174471137	BRACKET ASSY				A	
LDL-9775457-1-A.doc	LZ001	NATDL-9775457-1	A	1-2	2			35907	A4		U	174471137	BRACKET ASSY				A	NATIVE FILES
L9775457-A.pdf	LZ001	9775457	A	1-5	5			35907	A1		U	174471137	BRACKET ASSY				A	
L9775457-A.dwg	LZ001	NAT9775457	A	1-5	5			35907	A1		U	174471137	BRACKET ASSY				A	NATIVE FILES
L9775458-B.pdf	LZ001	9775458	B	1	1			35907	A0		U	174471137	BRACKET ASSY				A	
* L9775457-A.zip	LZ001	NAT9775457	A	1	1			35907	1		U	174471137	BRACKET ASSY				A	NATIVE FILES

*Combine 3D CAD native files (Solid Works, Solid Edge, Inventor…) in .zip file using the top level drawing number as the file name.

File Naming Convention

File Name	Description
LDL-9775457-1-A.pdf	Data List no DL-9775457-1, Sheet 1 to 2, Rev A
LDL-9775457-1-A.doc	Data List no DL-9775457-1, Sheet 1 to 2, Rev A
L9775457-A.pdf	Drawing no 9775457, Sheet 1 to 5, Rev A
L9775457-A.dwg	Drawing no 9775457, Sheet 1 of 5, Rev A
L9775458-B.pdf	Drawing no 9775458, Sheet 1 of 1, Rev B
L9775457-A.zip	*Native CAD Model Files, all files & sheets, Rev A

Filename Prefixes

A, L or M9775457.pdf [(A)ir, (L)and or (M)aritime + 9775457 = Document Number]

FIGURE 2 METADATA EXAMPLE (Revised Drawings & Associated Lists)

A5.0 APPENDIX: WATER QUALITY TESTING REQUIREMENTS

A5.1 General

A5.1.1 Objective

A5.1.1.1 The objective of the water quality testing is to ensure that the WTS meets the minimum performance requirements defined by Canada for contaminant reduction and for quantity of potable water.

A5.1.2 Requirements

A5.1.2.1 Water quality testing will be conducted on the WTS utilizing test waters. Test water will verify the effectiveness of the WTS in reducing high concentrations of select contaminants and dissolved elements, to acceptable drinking water guideline levels. The WTS will be required to produce the minimum quantity of water within a given time frame.

A5.1.2.2 The water quality testing consists of treating the four (4) test waters:

A5.1.2.2.1 Organic Compound Fouling and Hard Water Treatment ;

A5.1.2.2.2 Bacteria and Virus Elimination;

A5.1.2.2.3 Organic Compound Reduction; and

A5.1.2.2.4 Inorganic Compound Reduction.

A5.1.2.3 The test waters preparation and verification requirements are described in A5.1 and A5.2. Sections; and the water quality test procedures and evaluation criteria are in Section A5.3.

A5.1.2.4 The contractor responsibilities WRT Water Quality Testing Requirements are as follows:

A5.1.2.4.1 Must provide facility for water quality testing (IAW A5.1.3);

A5.1.2.4.2 Must provide a test design set up plan (IAW A5.1.4);

A5.1.2.4.3 Must provide a quality source feed water (IAW A5.1.5), and

A5.1.2.4.4 Must collect water samples IAW Lab protocol (IAW A5.1.6).

A5.1.3 Facility

A5.1.3.1 Contractor's responsibilities with respect to the water quality testing facility are:

A5.1.3.1.1 Water quality testing must not be subjected to outdoor ambient temperatures or weather events;

A5.1.3.1.2 Must have access to water source, water drainage, power, or other materials and/or tools required to address potential problems that we could encounter during setup;

A5.1.3.1.3 Must allow the WTS to operate using both Generator and external power source inside the facility;

A5.1.3.1.4 Must provide vessels to contain test waters as well as Permeate waters upon completion of filtration;

A5.1.3.1.5 Must permit access for multiple days of testing and/or possible re-test on sub-sequent day(s) or week(s); and

A5.1.3.1.6 Must permit access to Government Canada personnel and equipment to conduct testing;

A5.1.4 **Test Setup**

A5.1.4.1 The Setup of the WTS vessels will be imperative to allow Canada and the Contractor conducting in-situ testing concurrently to confirm test waters meet the defined general parameters.

A5.1.4.2 Contractor's responsibilities with respect to test set up are:

A5.1.4.2.1 The contractor must allow DND personnel to assist with test installation, source water preparation and test water analysis, in-situ verification and confirmation of data measurements with their own equipment, in conjunction with the contractor's personnel.

A5.1.4.2.2 The Contractor must conduct all in-situ water testing and sampling with DND personnel and subject matter experts witnessing the procedure;

A5.1.4.2.3 The contractor must have an inline system set up with a temperature probe at the WTS inlet to maintain and monitor the feed test water temperature;

A5.1.4.2.4 The contractor must have an inline system set up to monitor the total dissolved solids (TDS) of the feed test water at the WTS inlet; and

A5.1.4.2.5 A flow rate and pressure monitor must be set up after every unit operation in the WTS (a unit operation in the WTS is defined as a component that is designed, or would be reasonably assumed, to change the system pressure or that is designed to remove contaminants from the challenge water).

A5.1.4.2.6 Must utilize vessels with the following requirements:

A5.1.4.2.6.1 The vessel(s) must be constructed of a material that will not contaminate the challenge and permeate water;

A5.1.4.2.6.2 Must be of an appropriate size in order to contain the required volume of test water IAW approved test plan.

A5.1.4.2.6.3 Must be outfitted with a system that continuously agitates the test water to maintain contaminant suspension and to ensure equal contaminant distribution; and

A5.1.4.2.6.4 Must have water level markings in liters, on reservoir body;

A5.1.5 **Source of water**

A5.1.5.1 The Contractor must supply the **source water** and **test water** for the WTS test IAW approved Test plan and procedures;

A5.1.5.2 The **Source water** is the water that meets the general parameters defined by Canada, prior to any addition of ingredients. The Contractor will be responsible to provide lab result, to Canada, confirming that the water source meet all the parameters, IAW test plan.

A5.1.5.3 The **Test water** is the source water with the addition of the ingredients from **Table 1.** *Test Water Ingredients and General Parameter Requirements*.

A5.1.5.4 Contractor's responsibilities with respect to the source water and test waters are as follows:

A5.1.5.4.1 Source water and Test waters must be prepared by the contractor;

A5.1.5.4.2 The contractor must demonstrate that the water source does not contain ingredients at levels that will affect the water quality testing (Lab support data);

A5.1.5.4.3 The contractor must allow appropriate time for homogenization of the test water mixture and demonstrate, with in-situ measurements (e.g. density, TDS/ conductivity) , that test water meet the general parameters defined by Canada at A5.3 Test Procedures and Minimum Performance Requirements #1,2,3 and 4;

A5.1.5.4.4 The contractor must prepare sufficient test water for each respective test and achieve the amount of required average permeate flow rate specified in Test Water 1,2,3 and 4;

A5.1.5.4.5 The contractor must continuously agitate the test water to maintain contaminant suspension and to ensure equal contaminant distribution;

A5.1.6 ***In situ* Testing, Sampling and Analyses**

A5.1.6.1 All *in situ* testing, water sampling and subsequent laboratory analyses must be conducted to ensure general test waters parameters and contaminant requirements are met and to determine permeate contaminant concentrations.

A5.1.6.2 Any evident variation of the in-situ test results of the test water(s) parameters between Canada and the contractor must be addressed by taking the average parameter reading of Canada's and the contractor's results.

A5.1.6.3 Until source water and test water parameters conditions have been met, the WTS testing will not take place. Once met, they must be maintained throughout the test.

A5.1.6.4 The Contractor must have a contract in place with the laboratory(ies) conducting the analyses. Canada must be listed on the contract with the laboratory(ies) conducting the analyses and copied on test results directly from the lab. Lab results can be sent to PSPC Canada.

A5.1.6.5 All laboratory analyses must be conducted by a laboratory which is accredited to ISO/IEC 17025 for the required parameters in drinking water. The laboratory accreditation must be from an accreditation body which is signatory to the ILAC

MRA (International Laboratory Accreditation Cooperation Mutual Recognition Arrangement).

A5.1.6.6 Samples Responsibilities:

A5.1.6.6.1 Sample collection must be IAW approved methods by a recognized water testing standards development organization (e.g. ASTM, NSA, EPA, and Health Canada). The following sample collections must be the contractor's responsibility.

A5.1.6.6.1.1 Source water samples prior to adding any ingredient IAW approved test plan;

A5.1.6.6.1.2 Test water samples after adding ingredients IAW approved test plan;

A5.1.6.6.1.3 Test water samples of the in process test water at various stages of treatment IAW approved test plan; and

A5.1.6.6.1.4 Permeate sample post filtration;

A5.1.6.6.2 Sampling must be appropriate to ensure the integrity of the test results for the parameters being tested, and performed in accordance with water testing standards,

A5.1.6.6.3 Failure to follow the defined procedures may result in the Contractor conducting a re-tests.

A5.1.7 **Compliancy**

A5.1.7.1 Laboratory test results that do not meet the contaminant parameters or permeate quality requirements defined for each test water will be considered a fail and the contractor will be required to address the issue and conduct a re-test. The permeate quality requirements are based on the Guidelines for Canadian Drinking Water Quality (GCDWQ) and on the Ontario Drinking Water Standards (ODWS) for instances where the GCDWQ lacks specificity.

A5.2 Test Water Preparation and Verification

Table 1. Test Water Ingredients and General Parameter Requirements.

		Test Water							
		1 – Bio-fouling and Hardness		2 – Bacteria and Virus Elimination		3 – Organic Reduction		4 – Inorganic Reduction	
Ingredients and Required Minimum Concentration		Sodium chloride	44,780 ppm	Escherichia Col	$5 \cdot 10^8$ CFU/L	MTBE	0.25 ppm	Sodium Arsenite	1 ppm (as arsenic (III))
		Calcium chloride	200 ppm calcium carbonate equivalent	GI F-Specific RNA Coliphage MS2	$5 \cdot 10^8$ PFU/L	Carbon Tetrachloride	0.1 ppm	Sodium Iodide	60 ppm (as iodide)
		Magnesium chloride		Sodium Chloride	290 ppm	Chloroform	2.0 ppm	Sodium Fluoride	50 ppm (as fluoride)
		Humic acid	20 ppm	Humic acid	10 ppm	Benzene	0.4 ppm	Sodium Perchlorate	0.2 ppm (as perchlorate)
						Sodium Chloride	300 ppm	Sodium Nitrate	195 ppm (as nitrate)
								Cesium Chloride	1.5 ppm (as cesium)
								Mercury (II) Chloride	0.02 ppm (as mercury (II))
								Lead (II) Chloride	0.5 ppm (as lead (II))
								Sodium Chloride	135 ppm
General Parameter Requirements (To be Measured /Verified In-situ)	Free Chlorine (ppm)	<0.002		<0.002		<0.002		<0.002	
	Water Temperature (°C)	18-22		18-22		18-22		18-22	
	pH	6-8		6-8		6-8		6-8	
	TDS (ppm)	45,000 (±10%)		≥300		≥300		≥1,500	
	Hardness (ppm $CaCO_3$)	≥200		<200		<200		<200	
	DOC (ppm)	≥20		≥10		<5[1]		<5[1]	
	Turbidity (NTU)	≤1		≤1		≤1		≤1	

[1] Based on Ontario Ministry of the Environment (MOE). 2003 (revised 2006). The Technical Support Document for the Ontario Drinking Water Quality Standards, Objectives and Guideline. PIBS 4449e01 Available on https://www.ontario.ca

A5.3 Test Procedures and Minimum Performance Requirements

A5.3.1 Requirements

A5.3.1.1 The required test conditions, test water concentrations, and allowable permeate concentrations for each of the test waters are in Sections A1.5.2 – A1.5.5. The general parameters defined in Section A1.4 must be monitored in-situ and maintained throughout the test. The specific test water and permeate contaminant concentrations will be verified by laboratory testing.

A5.3.2 Test Water 1: Organic Carbon Fouling and Hard Water Treatment

A5.3.2.1 The test water parameters, contaminant concentrations, and allowable permeate concentrations for organic carbon fouling and hard water treatment are in Table 2.

Table 2. Test water 1 - Test Conditions, Contaminant Parameters and Performance Requirements

Test Conditions		
Test Duration		2 hrs
Required Average Permeate Flow Rate		625 L/h
Contaminant Parameters and Performance Requirements		
Contaminant Parameter	**Test Water Concentration (ppm)**	**Allowable Permeate Concentration (ppm)**
TDS	45,000 +/- 10%	AO: ≤ 500 (Table 2, p. 19)[1]
Hardness	200	80-100 (Table 2, p. 13)
DOC	20	AO: 5 (p. 21)[2]
Sodium	17,616 ppm	200 ppm (Table 2, p. 18)[1]
Chloride	27,164 ppm	250 ppm (Table 2, p. 9)[1]

[1] AO – Aesthetic Objective. Health Canada (2020). Guidelines for Canadian Drinking Water Quality – Summary Table. Water and Air Quality Bureau, Healthy Environments and Consumer Safety Branch, Health Canada, Ottawa, Ontario.

[2] AO – Aesthetic Objective. Ontario Ministry of the Environment (MOE). 2003 (revised 2006). The Technical Support Document for the Ontario Drinking Water Quality Standards, Objectives and Guideline. PIBS 4449e01 Available on https://www.ontario.ca/

A5.3.3 Test Procedure:

A5.3.3.1 The WTS must be flushed with water as per system requirements and the flow rate and pressure must be recorded after every unit operation in the WTS to use as a clean system baseline.

A5.3.3.2 The test water must run through the WTS with the WTS operating in a double-pass mode. The trial is said to start 5 minutes after the test water begins being processed by the WTS and the trial is set to last for 2 hours. The inlet temperature reading and the inlet total dissolved solids reading must be recorded at the start of the trial and every 5 minutes after trial start to ensure feed consistency. These values must be automatically monitored and recorded for the entire duration of the trial.

A5.3.3.3 The flow rate and pressure must be recorded after every unit operation in the WTS at the start of the trial and every 5 minutes after trial start. These values must be automatically monitored and recorded for the entire duration of the trial.

A5.3.3.4 To determine contaminant rejection/reduction, a sample must be collected from permeate streams every 15 minutes. The temperature, pH, TDS, and free chlorine of these samples must be measured immediately. The samples must then be processed and shipped to a laboratory to determine the concentrations of TDS, DOC, water hardness (as calcium carbonate), sodium, chloride, and disinfection by-products (DBPs).

A5.3.3.5 The WTS must be turned off after 2 hours of trial time, drained and then the Contractor manufacturer's instructions must be followed to operate the clean-in-place system.

A5.3.3.6 The remaining volume of test water must be measured. The remaining test water volume is to be compared to the volume of permeate produced and the initial test water volume to determine the percent permeate production.

A5.3.4 Evaluation Criteria

A5.3.4.1 The permeate flow rate data after filtration processes collected every 5 minutes must be plotted. The data will be extrapolated to estimate the flow rate curve of the WTS over 20 hours of continuous operation. The WTS is deemed to have sufficient permeate flow rate if the total flow rate expected during 20 hours of operation averages of 625 L/h.

A5.3.4.2 All permeate parameter values and contaminant concentrations must meet the specified permeate quality standards in Table 2. DBP concentrations must meet GCDWQ standards, pH standards excluded. The quality standards must be met by both the single-pass and double-pass permeate samples, however total TDS reduction, sodium reduction, and chloride reduction must only be met by the double-pass permeate sample.

A5.3.5 Test water 2: Bacteria and Virus Elimination

A5.3.5.1 The test water parameters, contaminant concentrations, and allowable permeate concentrations for bacteria and virus elimination are in Table 3.

Table 3. Test Water 2 - Test Conditions, Contaminant Parameters and Performance Requirements

Test Conditions		
Test Duration		1 hr
Required Average Permeate Flow Rate		1,250 L/h
Contaminant Parameters and Performance Requirements		
Contaminant Parameter	**Test Water Concentration (ppm)**	**Allowable Permeate Concentration (ppm)**
DOC	10.00 ppm	AO: 5 (p. 21)[2]
Escherichia Coli	$5 \cdot 10^8$ CFU/L	None detectable/100 mL (Table 1, p.4)[1]
GI F-Specific RNA Coliphage MS2	$5 \cdot 10^8$ PFU/L	None detectable /100 mL (Table 1, p.4 as "Total coliforms" surrogate)[1]

[1] AO – Aesthetic Objective. Health Canada (2020). Guidelines for Canadian Drinking Water Quality – Summary Table. Water and Air Quality Bureau, Healthy Environments and Consumer Safety Branch, Health Canada, Ottawa, Ontario.

[2] AO – Aesthetic Objective. Ontario Ministry of the Environment (MOE). 2003 (revised 2006). The Technical Support Document for the Ontario Drinking Water Quality Standards, Objectives and Guideline. PIBS 4449e01 Available on https://www.ontario.ca/

A5.3.6 **Test Procedure:**

A5.3.6.1 The WTS must be flushed with water as per system requirements and the flow rate and pressure must be recorded after every unit operation in the WTS to use as a clean system baseline.

A5.3.6.2 The test water must run through the WTS with the WTS operating in single-pass mode. The trial is said to start 5 minutes after the test water begins being processed by the WTS and the trial is set to last for 1 hour. The inlet temperature reading and the inlet total dissolved solids reading must be recorded at the start of the trial and every 5 minutes after trial start to ensure feed consistency. These values would ideally be automatically monitored and recorded for the entire duration of the trial.

A5.3.6.3 The flow rate and pressure must be recorded after every unit operation in the WTS at the start of the trial and every 5 minutes after trial start. These values must be automatically monitored and recorded for the entire duration of the trial.

A5.3.6.4 To determine contaminant reduction, a sample must be collected from the permeate stream every 15 minutes. The temperature, pH, TDS, and free chlorine of these sample must be measured immediately. The samples must be analyzed within one hour using an ATP test to determine the concentration of intracellular ATP and dissolved (extracellular) ATP. The samples must then be processed and shipped to a laboratory to determine the concentrations of DOC, Escherichia Coli, GI F-Specific RNA Coliphage MS2 and DBPs.

A5.3.6.5 The WTS must be turned off after 1 hour of trial time, drained and then the manufacturer's instructions must be followed to operate the clean-in-place system

A5.3.6.6 The remaining volume of test water must be measured. The remaining test water volume is to be compared to the volume of permeate produced and the initial test water volume to determine the percent permeate production.

A5.3.6.7 A sample of the left-over test water must be collected. This sample must be analyzed must within one hour using an ATP test to determine the concentration of intracellular ATP and dissolved (extracellular) ATP.

A5.3.7 **Evaluation Criteria:**

A5.3.7.1 The permeate flow rate data after single-pass collected every 5 minutes will be plotted. The data will be extrapolated to estimate the flow rate curve of the WTS over 20 hours of continuous operation. The WTS is deemed to have sufficient permeate flow rate if the total flow rate expected during 20 hours of operation averages to 1,250 L/h.

A5.3.7.2 All permeate parameter values and contaminant concentrations must meet the specified permeate quality standards in Table 3. DBP concentrations must meet GCDWQ standards, pH standards excluded. The sample collected from the left-over test water in Test Procedure at Para A5.7.2.7 above must demonstrate that active biological contaminants in the test water remained at the concentrations specified in Table 3.

A5.3.8 **Test water 3: Organic Compound Reduction**

A5.3.8.1 The test water parameters, contaminant concentrations, and allowable permeate concentrations for the organic compound rejection challenge are in Table 4.

Table 4. Test Water 3 - Test Conditions, Contaminant Parameters and Performance Requirements

Test Conditions		
Test Duration		1 hr
Required Average Permeate Flow Rate		1,250 L/h
Contaminant Parameters and Performance Requirements		
Contaminant Parameter	**Test Water Concentration (ppm)**	**Allowable Permeate Concentration (ppm)**
MTBE	0.25 ppm	0.015 ppm (Table 2, p.15)[1]
Carbon Tetrachloride	0.1 ppm	0.002 ppm (Table 2, p.9)[1]
Chloroform	2.0 ppm	0.1 ppm (Table 2, p.20 as "Trihalomethanes" surrogate)[1]
Benzene	0.4 ppm	0.005 ppm (Table 2, p. 7)[1]

[1] AO – Aesthetic Objective. Health Canada (2020). Guidelines for Canadian Drinking Water Quality – Summary Table. Water and Air Quality Bureau, Healthy Environments and Consumer Safety Branch, Health Canada, Ottawa, Ontario.

A5.3.9 **Test Procedure:**

A5.3.9.1 The WTS system must be flushed with source water and the flow rate and pressure must be recorded after every unit operation in the WTS to use as a clean system baseline.

A5.3.9.2 The test water must run through the WTS with the WTS operating in single-pass mode. The trial is said to start 5 minutes after the test water begins being processed by the WTS and the trial is set to last for 1 hour. The inlet temperature reading and the inlet total dissolved solids reading must be recorded at the start of the trial and every 5 minutes after trial start to ensure feed consistency. These values would ideally be automatically monitored and recorded for the entire duration of the trial.

A5.3.9.3 The flow rate and pressure must be recorded after every unit operation in the WTS at the start of the trial and every 5 minutes after trial start. These values would ideally be automatically monitored and recorded for the entire duration of the trial.

A5.3.9.4 To determine contaminant rejection, a sample must be collected from the permeate stream every 15 minutes. The temperature, pH, TDS, and free chlorine of these samples must be measured immediately. The samples must then processed and shipped to a laboratory to determine the concentrations of MTBE, carbon tetrachloride, benzene, and DBPs.

A5.3.9.5 The WTS must be turned off after 1 hour of trial time, drained and then the manufacturer's instructions must be followed to operate the clean-in-place system

A5.3.9.6 The remaining volume of test water must be measured. The remaining test water volume is to be compared to the volume of permeate produced and to the initial test water volume to determine the percent permeate production.

A5.3.10 **Evaluation Criteria**

A5.3.10.1 The permeate flow rate data after single-pass collected every 5 minutes will be plotted. The data will be extrapolated to estimate the flow rate curve of the WTS over 20 hours of continuous operation. The WTS is deemed to have sufficient

permeate flow rate if the total flow rate expected during 20 hours of operation averages to 1,250 L/h.

A5.3.10.2 All permeate parameter values and contaminant concentrations must meet the specified allowable permeate concentrations in Table 4. DBP concentrations must meet GCDWQ standards.

A5.3.11 Test water 4: Inorganic Compound Reduction

A5.3.11.1 The test water parameters, contaminant concentrations, and allowable permeate concentrations for the inorganic compound rejection challenge are in Table 5.

Table 5. Test water 4 - Test Conditions, Contaminant Parameters and Performance Requirements

Test Conditions		
Test Duration		1 hr
Required Average Permeate Flow Rate		625 L/h
Contaminant Parameters and Performance Requirements		
Contaminant Parameter	**Test Water Concentration (ppm)**	**Allowable Permeate Concentration (ppm)**
Arsenic (III)	1	0.01 ppm (Table 2, p. 7)[1]
Iodide	60	0.03 ppm (Table 3, p. 22 as "Iodine-131" surrogate)[1,3]
Fluoride	50	1.5 ppm (Table 2, p. 13)[1]
Perchlorate	0.2	0.006 ppm (Table 7.2, p. 34)[2]
Nitrate	195	10 ppm (Table 2, p. 15)[1]
Cesium	1.5	0.001 ppm (Table 3, p. 22 as "Cesium-137" surrogate)[1,3]
Mercury (II)	0.02	0.001 ppm (Table 2, p. 15)[1]
Lead (II)	0.5	0.005 ppm (Table 2, p. 14)[1]
Chloride	135	200 ppm (Table 2, p. 18) [1]
Chloride	80.23	250 ppm (Table 2, p. 9) [1]
TDS	1500	AO: ≤ 500 (Table 2, p. 19)[1]

[1] AO – Aesthetic Objective. Health Canada (2020). Guidelines for Canadian Drinking Water Quality – Summary Table. Water and Air Quality Bureau, Healthy Environments and Consumer Safety Branch, Health Canada, Ottawa, Ontario.

[2] NSF International (2016). NSF/ANSI 58 - Reverse osmosis drinking water treatment systems. NSF International Standard/American National Standard for Drinking Water Treatment Units. NSF International.

[3]Permeate Quality Standard adjusted with respect to percent rejection objective and post-processing analysis limitations

A5.3.12 Test Procedure:

A5.3.12.1 The WTS must be flushed with water and the flow rate and pressure must be recorded after every unit operation in the WTS to use as a clean system baseline.

A5.3.12.2 The test water must run through the WTS with the WTS operating in double-pass mode. The trial is said to start 5 minutes after the test water begins being processed by the WTS and the trial is set to last for 1 hour. The inlet temperature reading and the inlet total dissolved solids reading must be recorded at the start of the trial and every 5 minutes after trial start to ensure feed consistency. These values would ideally be automatically monitored and recorded for the entire duration of the trial.

A5.3.12.3 The flow rate and pressure must be recorded after every unit operation in the WTS at the start of the trial and every 5 minutes after trial start. These values would ideally be automatically monitored and recorded for the entire duration of the trial.

A5.3.12.4 To determine contaminant reduction, a sample must be collected from permeate streams every 15 minutes. The temperature, pH, TDS, and free chlorine of these samples must be measured immediately. The samples must then be processed and shipped to a laboratory to determine the concentrations of the inorganic parameters identified in Table 5.

A5.3.12.5 The WTS must be turned off after 1 hour of trial time, drained and then the manufacturer's instructions must be followed to operate the clean-in-place system

A5.3.12.6 The remaining volume of test water must be measured. The remaining test water volume is to be compared to the volume of permeate produced and the initial test water volume to determine the percent permeate production.

A5.3.13 **Evaluation Criteria**

A5.3.13.1 The permeate flow rate data after single-pass collected every 5 minutes will be plotted. The data will be extrapolated to estimate the flow rate curve of the WTS over 20 hours of continuous operation. The WTS is deemed to have sufficient permeate flow rate if the total flow rate expected during 20 hours of operation averages to 625 L/h.

A5.3.13.2 All permeate parameter values and contaminant concentrations must meet the specified permeate quality standards in Table 5.

A6.0 APPENDIX: CHEMICAL AGENT RESISTANT COATING (CARC) SYSTEM

A6.1 Scope

A6.1.1 This appendix outlines the procedures to be followed and the products to be used in order to paint surfaces of the Canadian Army operational vehicles/equipment with the distinctive exterior permanent matt green colour (AMS-STD-595 #34094) and interior permanent gloss white colour (AMS-STD-595 #17925) coating systems that provide the corrosion, the camouflage, the infra-red and CARC properties required for the protection of the vehicles/equipment and for the protection of the soldier.

A6.2 Applicable Documents and Product NSNs

A6.2.1 Copies of these documents are available online from the US Department of Defense web site at http://quicksearch.dla.mil/ or from the Standardization Document Order Desk, 700 Robbins Avenue, Building 4D, Philadelphia, PA 19111-5094.

Specification	NSN	Description
MIL-DTL-53072	N/A	Detail Specification Chemical Agent Resistant Coating (CARC) System Application Procedures and Quality Control Inspection
DOD-P-15328	8030-00-281-2726	Primer (Wash), Pre-treatment (Formula 117 For Metals) (Metric) (*NSN for 1 US Gal size kit*)
TT-C-490 Type III	8030-00-281-2726	Chemical Conversion Coatings and Pre-treatments for Ferrous Surfaces (Base for Organic Coatings) (*NSN for 1 US Gal size kit*)
AMS-STD-595	N/A	Colors Used in Government Procurement
MIL-DTL-53022 Type IV	8010-01-589-7077	Primer, Epoxy Coating, (Enhanced) Corrosion Inhibiting, Lead and Chromate Free (*NSN for 1.25 US Gal size kit*)
MIL-DTL-53022 Type V	8010-01-610-7329	Primer, Epoxy Coating, (Enhanced) Corrosion Inhibiting, Lead and Chromate Free (*NSN for 6X250 ml aerosol can kits*)
MIL-PRF-32348 Type I Class I with a maximum of 45 Gloss Units at 60°	8010-01-592-0167 8010-01-620-2690	Primer, Powder Coating, Corrosion Inhibiting (*NSN for 50 pound bag, colour #26622 or #27875 with a maximum Gloss level of 45 Gloss Units as determined by ASTM D523 at a 60° geometry*)
ASTM D 523	N/A	Standard Test Method for Specular Gloss
MIL-PRF-24667 Type I, II or IV, Composition G	8010-01-397-3806	Coating System, Non-Skid, for Roll, Spray or Self-Adhering Application (*NSN for 5 US Gal kit*)
MIL-DTL-64159 Type II	8010-01-493-3169 8010-01-493-3170 8010-01-493-3177 8010-01-493-3179	Coating, Water Dispersible Aliphatic Polyurethane, Chemical Agent Resistant (*NSNs are for 0.75 and 3 US Gal size colour green #34094 and tan #33446*)
MIL-DTL-64159 Type III	8010-01-596-7862 8010-01-596-7859 8010-01-596-7855	Coating, Water Dispersible Aliphatic Polyurethane, Chemical Agent Resistant (*NSNs are for 30 mL kit colour green #34094, for 30 mL kit colour tan #33446 and for 30 mL kit colour black #37030 respectively*)
MIL-PRF-22750 Type II Class H Grade B	8010-01-419-1164	Performance Specification, Coating, Epoxy, High Solids, Interior Use Only (*NSN is for 1 US Gal kit colour white #17925*)

MIL-PRF-32348 Type II Class I	8010-01-605-5413	Primer Powder Coating with no finish coating for interior use only, Chemical Agent Resistant (*50 pound bag, colour white #17925*)
MIL-PRF-32348 Type III Class I	-	Powder Coating Camouflage Chemical Agent Resistant Finish (*50 pound bag, colour green #34094*)
MIL-PRF-32348 Type III Class I	-	Powder Coating Camouflage Chemical Agent Resistant Finish (*50 pound bag, colour tan #33446*)
MIL-PRF-32348 Type IV Class I	8010-01-610-2410	Powder Topcoat, Ammunition Container Chemical Agent Resistant Coating (*NSN for 50 pound bag, colour green #34079*)
MIL-PRF-32348 Type IV Class I	8010-01-610-2413	Powder Topcoat, Ammunition Container Chemical Agent Resistant Coating (*NSN for 50 pound bag, colour Tan #33446*)
TSP	7930-20-A0H-0013	Tri-Sodium Phosphate (*1 pound container*)
Acetone	6810-21-878-4860	Acetone Technical (*1 Liter container*)

A6.3 Requirements

A6.3.1 A CARC system must be applied on the interior and exterior surfaces of the Canadian Army operational vehicles/equipment in conformance with the following descriptions.

A6.3.2 **Cleaning**

A6.3.2.1 All parts must be cleaned immediately before surface preparation. Prior to surface preparation, all surfaces must be freed of corrosion or soil contaminants such as grease, oil, welding flux, scale, dirt, adhesives or other foreign matter that may interfere with surface preparation, treatment or coating. For this purpose use a hot alkaline cleaning by immersion, spray or vapour process or appropriate organic solvent(s) as per MIL-DTL-53072 (latest edition).

A6.3.2.2 Precautions must be taken to ensure that surfaces remain clean and dry until they are pre-treated, primed and top coated.

A6.3.3 **Surface Preparation**

A6.3.3.1 Heavy metal parts must be processed by abrasive grit blast to a white metal SSPC-SP-5 surface finish to impart a profile of 38 to 50 microns (1.5 to 2 mils). Lighter delicate metal parts that cannot withstand aggressive grit blasting without warping must be processed in accordance with paragraph A6.3.3.2. For non-metallic parts surface preparation, perform a uniform scuffing of the surface with a 180 grit abrasive media. Dust-off surfaces.

A6.3.3.2 For delicate metal parts surface preparation, perform an abrasive grit blast cleaning to a white metal SSPC-SP-5 surface finish imparting to the substrate a profile of 13 microns. Dust-off surfaces.

A6.3.4 **Surface pre-treatment**

A6.3.4.1 Metal parts and non-metallic parts surfaces prepared as per paragraph A6.3.3.1 above do not require pre-treatment.

A6.3.4.2 Delicate metal part surfaces prepared as per paragraph A6.3.3.2 above must receive an organic pre-treatment (wash primer) coating meeting the requirements of specification TT-C-490 type III (DOD-P-15328) (latest edition).

A6.3.5 **Primer**

A6.3.5.1 A liquid primer coating meeting the requirements of specification MIL-DTL-53022 Type IV (latest edition), Epoxy Coating, Enhanced Corrosion Protection or a powder primer coating, Corrosion Inhibiting meeting the requirements of specification MIL-PRF-32348 Type I Class I (latest edition) with a maximum Gloss level of 45 Gloss Units as determined by ASTM D523 at a 60° geometry must be applied to all surfaces that need to be coated. These primers must be applied to a dry film thickness (DFT) as recommended by the manufacturer technical data sheet or specifically for MIL-DTL-53022 Type IV (latest edition) when applied direct to metal (i.e. w/o pre-treatment), a DFT of 50 to 63 microns must be achieved when measuring the DFT of the primers over the highest peaks of the profile. For interior surfaces see also para A6.3.7.2.2.

A6.3.5.2 WARNING: Powder primer coatings requiring a cure temperature above 180°C must not be used on composite materials or parts pre-treated with TT-C-490 Type III.

A6.3.6 **Non-Skid Surface**

A6.3.6.1 Apply, as per manufacturer's instructions a non-skid coating meeting the requirements of specification MIL-PRF-24667 Type I, II, or IV, Composition G, (latest edition) colour #36076 (dark grey) in accordance with AMS-STD-595 (latest edition) to surface areas intended as walk-on surfaces.

A6.3.6.2 WARNING: Products qualified to MIL-PRF-24667 Type I, II, or IV, Composition G are applied in a relatively thick coat and contain solvents that will negatively affect the adhesion of the primer MIL-DTL-53022 Type IV if applied too soon i.e. before the primer "Dry Hard" condition has been reached. Therefore, the non-skid product must be applied no sooner than the dry hard condition of the primer and its dry hard condition must be reached within a period of time that will allow for the application of the topcoat within 24 hours of the application of the primer.

A6.3.7 **Topcoat**

A6.3.7.1 Exterior Surfaces

A6.3.7.1.1 A liquid polyurethane topcoat meeting the requirements of specification MIL-DTL-64159 Type II (latest edition) or a finish powder coating meeting the requirements of MIL-PRF-32348 Type III Class I, colour #34094 (flat green) as per AMS-STD-595 (latest edition) must be applied to exterior surfaces including exterior walk-on surface areas having non-skid coating.

A6.3.7.1.2 WARNING: Powder coatings requiring a cure temperature above 180°C must not be applied over composite materials, MIL-PRF-24667 Type I, II, or IV, Composition G non-skid or MIL-DTL-53022 Type IV epoxy based coatings.

A6.3.7.2 Interior Surfaces

A6.3.7.2.1 An epoxy topcoat meeting the requirements of specification MIL-PRF-22750 Type II, Class H, Grade B (latest edition), colour #17925 (gloss white) as per AMS-STD-595 (latest edition) must be applied to interior surfaces including walk-on surface areas with non-skid coating.

A6.3.7.2.2 Powder primers that do not require a finish coating and meeting the requirements of MIL-PRF-32348 Type II Class I (latest edition), colour #17925 (gloss white) as per AMS-STD-595 (latest edition) intended for direct to metal in a single application can also be used on interior surfaces.

A6.3.7.2.3 WARNING: Powder primer coatings requiring a cure temperature above 180°C must not be applied over composites or MIL-PRF-24667 Type I, II, or IV, Composition G non-skid epoxy based coatings.

A6.3.7.3 Interior surfaces of parts that could be directly exposed to chemical agents such as hatches, ramps and doors must be coated as per paragraph A6.3.7.1 above.

A6.3.7.4 WARNING: The topcoats must not be applied before the "Dry Hard" condition of the non-skid material has been reached and must be applied within 24 hours after the application of the primer. There must be no walking on non-skid surfaces for a period of 7 days to allow full cure of the coating system.

A6.3.8 **Marking and Touch-Up**

A6.3.8.1 Marking

A6.3.8.1.1 Markings identifying the vehicle/equipment information, the flag, numbering and lettering must be performed with a touch-up coating kit meeting MIL-DTL-64159 Type III (latest edition) and AMS-STD-595 (latest edition) colour #37030 (flat black). Markings must be applied directly over the CARC system topcoat following its cleaning, if required, with a 2% weight TSP in potable water solution followed by a potable water rinse and then an acetone wipe & dry.

A6.3.8.2 Touch-Up

A6.3.8.2.1 For defects or damages to the CARC system that expose the substrate it is required to clean the area to be reworked; for this purpose use a 2% weight TSP in potable water solution followed by a potable water rinse and then an acetone wipe & dry. For metallic components it is then required to remove rust or corroded metal by sanding using an 80 grit paper or a mechanically driven steel brush (if a steel brush is used it will be required to clean again the surface as described above). For composite materials, hand-scuff using a 180 grit paper. Remove sanding dust with a clean dry paint brush and apply a coat of primer meeting the requirements of specification MIL-DTL-53022 Type V (latest edition); feather-in with the existing primer. Touch-up of the topcoat must be performed (at the dry-to-touch condition of the touch-up primer) with a touch-up coating kit meeting MIL-DTL-64159 Type III (latest edition) and AMS-STD-595 (latest edition) colour #34094 (flat green); feather-in with the existing topcoat.

A6.3.8.2.2 For defects or damages to the CARC system that expose the primer it is required to clean the area to be reworked; for this purpose use a 2% weight TSP in potable water solution followed by a potable water rinse and then an acetone wipe & dry. Hand-scuff the primer and surrounding topcoat

using a 180 grit scuffing paper. Touch-up of the topcoat must be performed with a touch-up coating kit meeting MIL-DTL-64159 Type III (latest edition) and AMS-STD-595 (latest edition) colour #34094 (flat green); feather-in with the existing topcoat.

A6.3.9 **Selection of Materials, Mixing and Application**

A6.3.9.1 Materials used must be selected from the applicable qualified products list (QPL/QPD) and must be mixed and applied as per the manufacturers' Technical Data Sheet (except for MIL-DTL-53022 Type IV (latest edition) DFT when applied direct to metal (see para A6.3.5.1). The brand name and QPL/QPD number of the materials used must be reported to the Technical Authority/Project Configuration Manager for CAF configuration, health, and safety purposes after acceptance of First Article Test Report.

A6.3.10 **Special Measures for Equipment Manufacturers / Painting Contractors**

A6.3.10.1 In any instance where the CARC system specified herein interferes with the design features of specific components that are key to the operation of the equipment, it is the manufacturer's responsibility to identify and propose a suitable alternative coating system having high chemical agent resistance and corrosion protection properties. The brand name of the approved alternative coating system materials must be reported to the TA.

A6.3.10.2 Deviations from CARC products and application processes identified herein as well as deviations from the product manufacturer Technical Data Sheet must be reported to the TA for their evaluation and approval.