Rev. Versio	Part no. Osanro	Field Kenttä	Alteration or remark Muutos tai huomautus	Date Pvm.	Changed by Muuttaja	Approved by Hyväksyjä
B			UPDATED ACC. TO DESIGN AND OWNER AND CLASS REMARKS	2009-08-20	EsHa	PJJ
C			UPDATED ACC. TO OWNER COMMENTS	2009-10-28	EsHa	MiHo

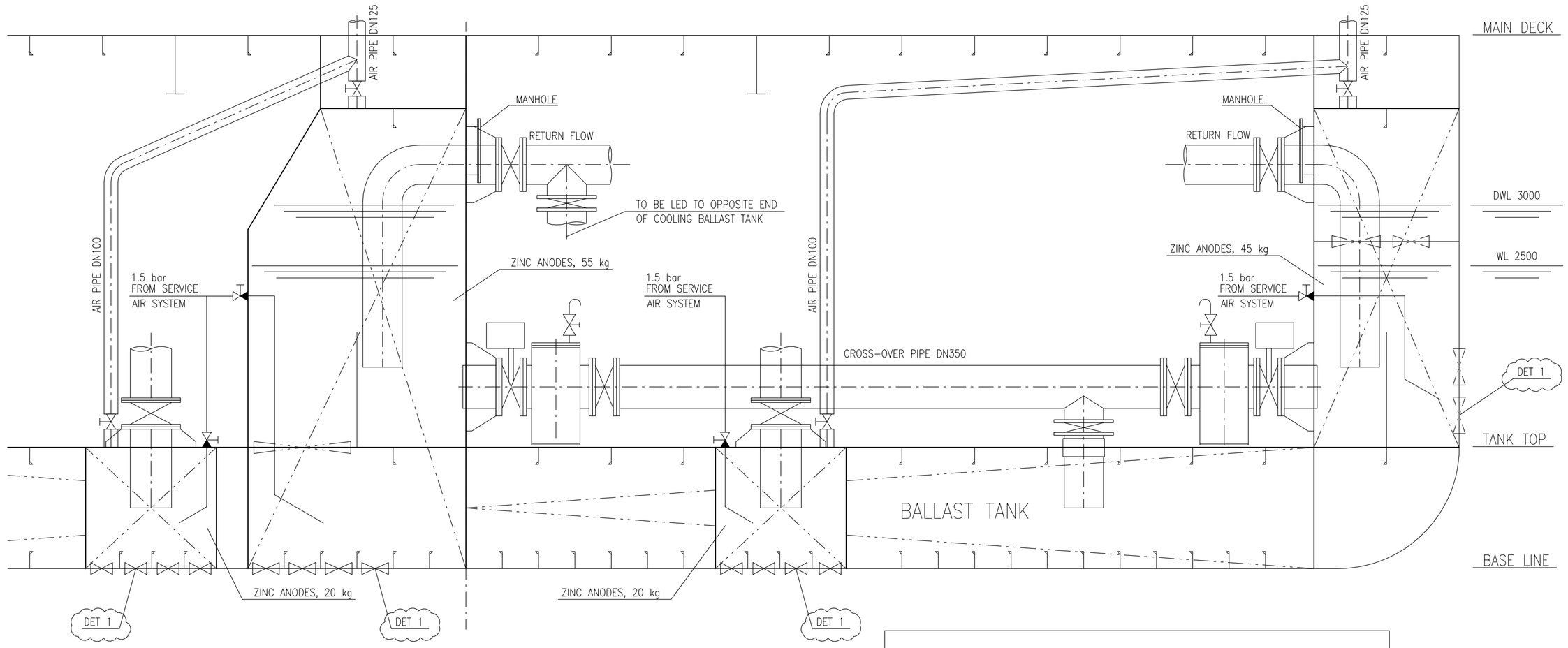

SECTION A – A

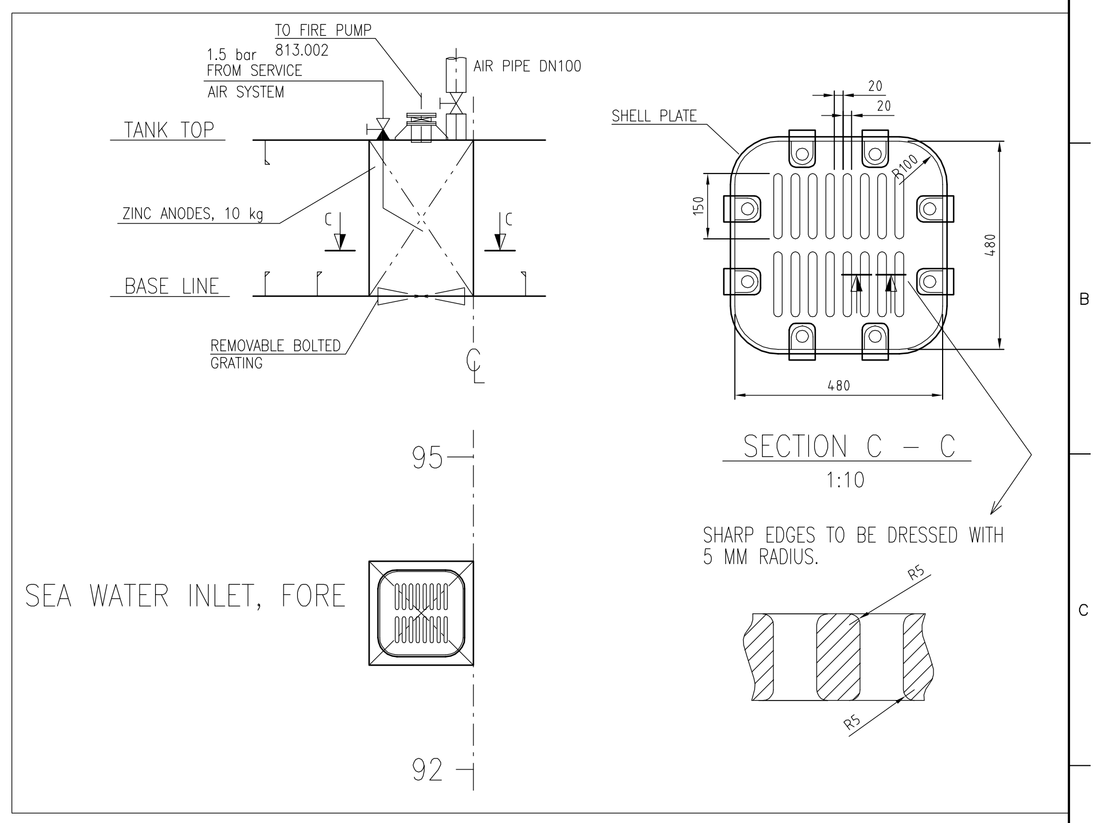

SECTION C – C
1:10

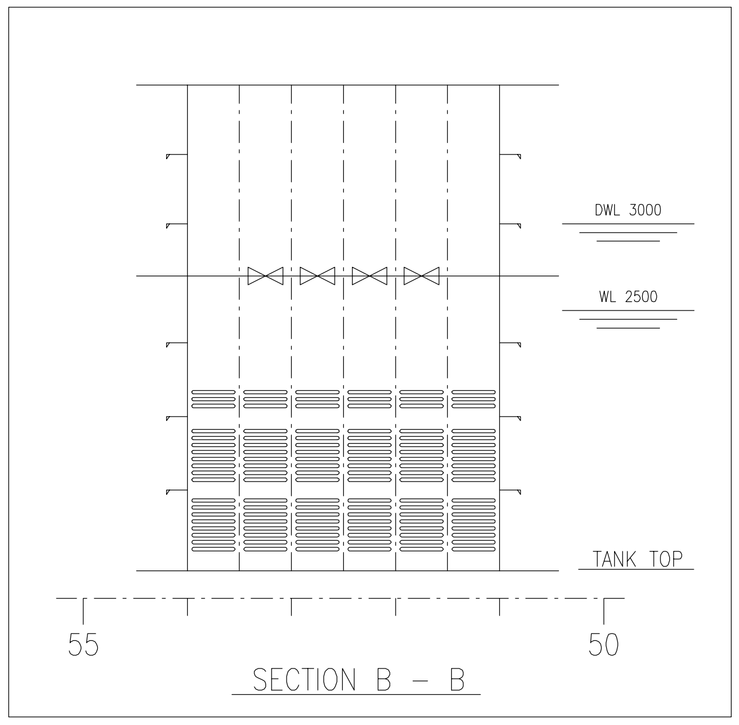

SECTION B – B

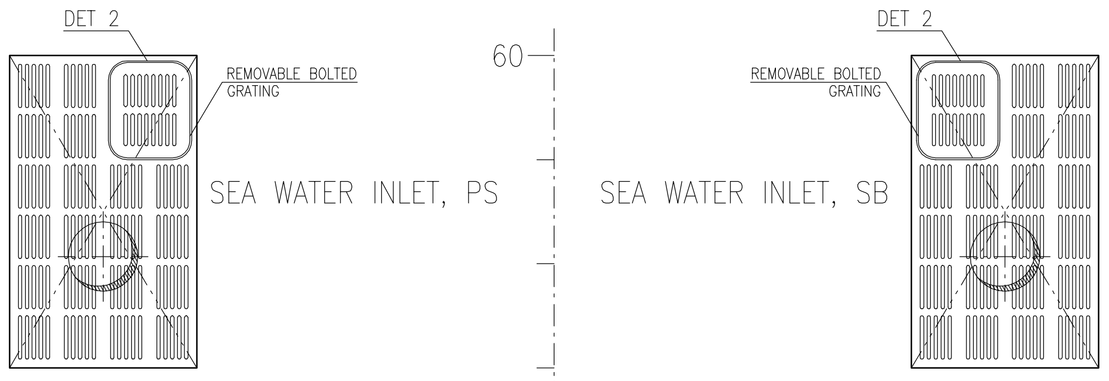

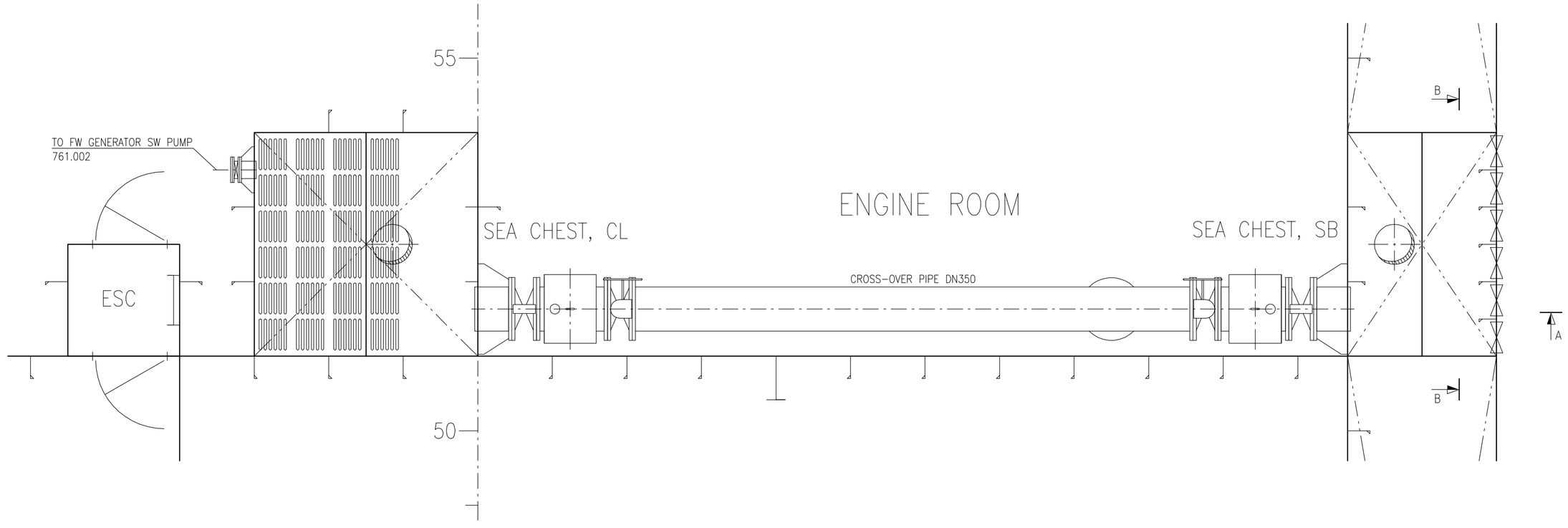

SEA CHEST, SB, CL
SEA WATER INLET, SB, PS

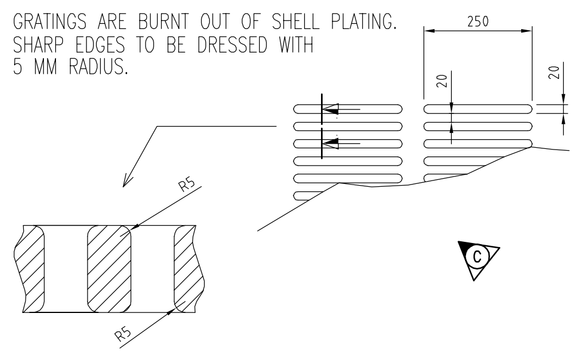

DET 1
1:10

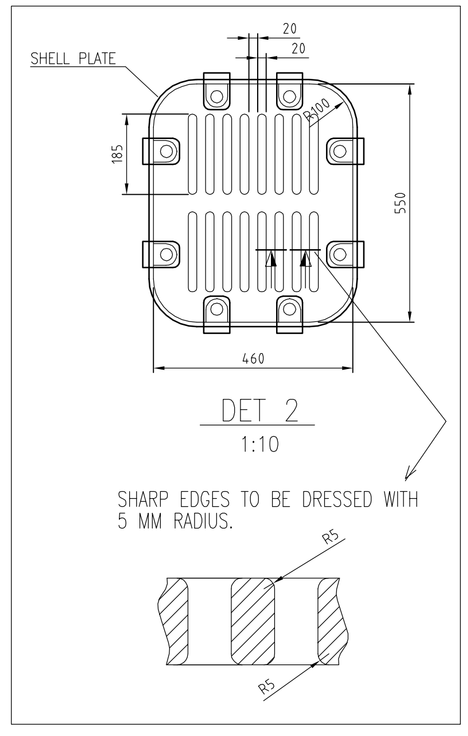

DET 2
1:10

SEA CHEST, SB

VOLUME OF WATER:	4.2 m3	721.001-004	SW PUMP FOR ME CENTRAL COOLERS	280 m3/h
QUANTITY OF WATER:	500 m3/h	721.005-006	SW PUMP FOR CENTRAL COOLERS	110 m3/h
INLET PIPE SECTIONAL AREA:	0.09 m2	721.007-008	SW PUMP FOR ER VENTILATION COOLING	60 m3/h*
FREE AREA OF GRATINGS:	0.56 m2	801.001-002	BALLAST PUMP	65 m3/h
VELOCITY IN GRATINGS:	0.25 m/s	813.001	FIRE AND DECK WASH PUMP	45 m3/h
			total:	500 m3/h

* ONLY USED AT EXTREME HOT CONDITIONS. NOT INCLUDED IN CALCULATION FOR TOTAL VELOCITY IN GRATINGS.

SEA CHEST, CL

VOLUME OF WATER:	9.7 m3	721.001-004	SW PUMP FOR ME CENTRAL COOLERS	280 m3/h
QUANTITY OF WATER:	565 m3/h	721.005-006	SW PUMP FOR CENTRAL COOLERS	110 m3/h
INLET PIPE SECTIONAL AREA:	0.09 m2	721.007-008	SW PUMP FOR ER VENTILATION COOLING	60 m3/h*
FREE AREA OF GRATINGS:	0.71 m2	761.002	SW PUMP FOR FW GENERATOR	65 m3/h
VELOCITY IN GRATINGS:	0.22 m/s	801.001-002	BALLAST PUMP	65 m3/h
		813.001	FIRE AND DECK WASH PUMP	45 m3/h
			total:	565 m3/h

* ONLY USED AT EXTREME HOT CONDITIONS. NOT INCLUDED IN CALCULATION FOR TOTAL VELOCITY IN GRATINGS.

SEA WATER INLET, SB

VOLUME OF WATER:	1,94 m3	813.001 FIRE FIGHTING PUMP	1600 m3/h
QUANTITY OF WATER:	1600 m3/h		total: 1600 m3/h
FREE AREA OF GRATINGS:	0.57 m2		
VELOCITY IN GRATINGS:	0.78 m/s		

SEA WATER INLET, PS

VOLUME OF WATER:	1,94 m3	814.002 FIRE FIGHTING PUMP	1600 m3/h
QUANTITY OF WATER:	1600 m3/h		total: 1600 m3/h
FREE AREA OF GRATINGS:	0.57 m2		
VELOCITY IN GRATINGS:	0.78 m/s		

SEA WATER INLET, FORE

VOLUME OF WATER:	0.32 m3	813.002 FIRE PUMP	45 m3/h
QUANTITY OF WATER:	45 m3/h		total: 45 m3/h
FREE AREA OF GRATINGS:	0.06 m2		
VELOCITY IN GRATINGS:	0.21 m/s		

P27032 SHALLOW DRAUGHT ICEBREAKING TUG (SDIBT)
STX BRAILA HULL NUMBER 740
IMO NUMBER XXX

STATUS Date Pvm. 2009-10-28
☐ 1 VERY PRELIMINARY ☒ 2 FOR OTHER DESIGN ☐ 2P FOR OTHER DESIGN
☐ 3 FOR WORKSHOP DESIGN ☐ 4 AS DESIGN ☐ 5 AS BUILT

Based on/Perustuu
Part of/Liittyy
Replaces/Korvaa

Copyright of Aker Arctic Technology Inc. All rights reserved.
No part thereof may be disclosed, copied, duplicated or in any other way made use of, except with the prior approval of Aker Arctic Technology Inc.

Aker Arctic

Design/Suunn. E.HAKANEN	Dpt. Osasto 500	Title/Nimitys	
Tel. +358 10 6702880	Date Pvm. 2009-07-03	SEA CHEST ARRANGEMENT	
Check/Tark. M.HOVILAINEN	Dpt. Osasto 500		
Tel. +358 10 6702591	Date Pvm. 2009-07-03		
Appr./Hyv. P.JAAKOLA	Dpt. Osasto 500		
Tel. +358 10 6702482	Date Pvm. 2009-07-03		
Program/Ohjelma AutoCAD	Paper size/Arkkikoko A1 (594x841)	Drawing number/Piirustusnumero 740-721-200	Rev./Ver. C
AARC Project/AARC Projekti P27032	Scale/Mitak. 1:25		Page/Lehti 1 (Pages/Lehtiä 1)