Public Works and Government Services Canada | Travaux publics et Services gouvernementaux Canada

RETURN BIDS TO:
RETOURNER LES SOUMISSIONS À:

Melanie Martyn
melanie.martyn@tpsgc-pwgsc.gc.ca

LETTER OF INTEREST
LETTRE D'INTÉRÊT

Title - Sujet RFI For AIEDDD	
Solicitation No. - N° de l'invitation W8476-226486/B	**Date** 2022-08-11
Client Reference No. - N° de référence du client 6000542498	**GETS Ref. No. - N° de réf. de SEAG** PW-$$QT-006-28774
File No. - N° de dossier 006qt.W8476-226486	**CCC No./N° CCC - FMS No./N° VME**
Solicitation Closes - L'invitation prend fin	
at - à 02:00 PM Eastern Standard Time EST	
on - le 2023-11-08 Heure Normale du l'Est HNE	
F.O.B. - F.A.B.	
Plant-Usine: ☐ **Destination:** ☐ **Other-Autre:** ☐	
Address Enquiries to: - Adresser toutes questions à: Martyn (QT Div), Melanie	**Buyer Id - Id de l'acheteur** 006qt
Telephone No. - N° de téléphone (819) 420-1745 ( )	**FAX No. - N° de FAX** (819) 956-5650
Destination - of Goods, Services, and Construction: **Destination - des biens, services et construction:** Specified Herein Précisé dans les présentes	

Comments - Commentaires

Instructions: See Herein

Instructions: Voir aux présentes

Vendor/Firm Name and Address
Raison sociale et adresse du fournisseur/de l'entrepreneur

Delivery Required - Livraison exigée See Herein – Voir ci-inclus	**Delivery Offered - Livraison proposée**
Vendor/Firm Name and Address **Raison sociale et adresse du fournisseur/de l'entrepreneur** **Telephone No. - N°de téléphone** **Facsimile No. - N° de télécopieur**	
Name and title of person authorized to sign on behalf of Vendor/Firm (type or print) **Nom et titre de la personne autorisée à signer au nom du fournisseur/ de l'entrepreneur (taper ou écrire en caractères d'imprimerie)** **Signature** **Date**	

Issuing Office - Bureau de distribution
Detection, Simulation and Optical Systems Division
Place du Portage III, 8C2
11 rue Laurier Street
Gatineau
Quebec
K1A 0S5

Canada

If there is any discrepancy between the English and French document, the English document takes precedence.

W8476-226486/B
Advanced Improvised Explosive Device Detection and Defeat (AIEDDD) Project
Request for Information (RFI) Process

---

1. Purpose and Nature of the RFI Process

This is the second of multiple potential engagement activities planned under this RFI process.

Public Services and Procurement Canada (PSPC) is requesting Industry feedback regarding the Advanced Improvised Explosive Device Detection and Defeat (AIEDDD) Project, for the Department of National Defence.

The closing date on the front page of this RFI is not the intended closing date. This RFI is to remain open until a formal solicitation process is released in the future. PSPC intends to release future engagement activity(ies) through independent RFI document(s), however under the same requirement number (W8476-226486). Each subsequent RFI document(s) will clearly identify the information Canada is requesting and the requested Industry response date.

Annex "A" Questions for Industry is attached to this RFI. Industry is requested to review these questions and provide answers to the PSPC Contracting Authority identified under Article 5, on or before **Tuesday, November 8th, 2022.**

The purpose of the RFI is to provide industry with an opportunity to view the updated technical requirements, and obtain cost estimates, in order to maximize best value to Canada, while reducing potential problems when the bid solicitation is posted.

This feedback will assist Canada in finalizing the requirements, and the RFI information herein will also provide potential Contractors an update on the procurement in preparation for the eventual bid solicitation.

The purpose of this RFI format is to:

a. provide a continuous single point of official project communication with industry;
b. collaborate with industry on the technical and cost elements of the requirement;
c. answer questions from industry to ensure all interested participants receive the same information;
d. provide schedule updates; and
e. hold industry meetings and engagement activities, as necessary.

The objective of this RFI process is to:

a. ensure Canada's expectations for engagement are clear and easy for Industry to understand;
b. foster innovation and deliver the best solution possible for Canada;
c. fully understand potential AIEDDD solutions the market has to offer and leverage Industry expertise;
d. to develop an efficient and effective procurement strategy that achieves the project's objectives and best value to Canada;
e. proactively communicate Canada's commitment to acquire and support a AIEDDD capability through a fair, open, transparent, and competitive procurement process;
f. communicate timely, relevant, and easy-to-understand information to ensure suppliers understand what the procurement process aims to achieve and how they can participate;
g. foster productive and positive working relationships with the AIEDDD supplier community to ensure the project's objectives are achieved;
h. advise Industry of potential engagement activities such as Industry Day events, site visits one-on one meetings and other potential engagement activities.

If there is any discrepancy between the English and French document, the English document takes precedence.

W8476-226486/B
Advanced Improvised Explosive Device Detection and Defeat (AIEDDD) Project
Request for Information (RFI) Process

This RFI process is not a Request for Proposal (RFP). No agreement or contract will be entered into based on this RFI process. The issuance of this RFI process is not to be considered in any way a commitment by Canada, nor as authority to potential Respondents to undertake any work that could be charged to Canada. This RFI process is not to be considered as a commitment to issue a subsequent solicitation or award contract(s) for the work described herein. Responses will not be formally evaluated.

Potential offerors may use this RFI to make known their comments on the draft technical requirements, and proposed procurement approach and methodology. Although the information collected may be provided as commercial-in-confidence (and, if identified as such, will be treated accordingly by Canada), Canada may use the information to assist in drafting performance specifications (which are subject to change) and for budgetary purposes.

Respondents are encouraged to identify, in the information they share with Canada, any information that they feel is proprietary, third party or personal information. Please note that Canada may be obligated by law (e.g. in response to a request under the Access of Information and Privacy Act) to disclose proprietary or commercially-sensitive information concerning a respondent (for more information: http://laws-lois.justice.gc.ca/eng/acts/a-1/.

Respondents must be aware that aspects of their response may be used as a basis for modifying draft documents as Canada prepares for any potential future procurement(s).

Respondents are asked to identify if their response, or any part of their response, is subject to the Controlled Goods Regulations.

Participation in this RFI process is encouraged, but is not mandatory. There will be no short-listing of potential suppliers for the purposes of undertaking any future work as a result of this RFI. Similarly, participation in this RFI is not a condition or prerequisite for the participation in any potential subsequent solicitation.

Respondents will not be reimbursed for any cost incurred by participating in this RFI process.

Changes to this RFI may occur and will be advertised on the Government Electronic Tendering System.

Canada asks Respondents to visit Buyandsell.gc.ca regularly to check for changes, if any.

2. Background Information

The Canadian Armed Forces requires an operationally capable, technically advanced, sustainable, and deployable Counter Explosive Threat capability to ensure the freedom of movement of personnel and equipment across all types of terrain in support of the missions assigned by the Government of Canada. See Annex “A”, Questions for Industry, for more information.

3. Potential Scope and Constraints

3.1 National Security Exception

In regards to national security interests, at this time, Canada believes it will not likely invoke its right under national and international trade agreements, and not use a National Security Exception (NSE) for this procurement.

3.2 Industrial and Technological Benefits Policy

The Industrial and Technological Benefits (ITB) Policy, including value proposition, will not apply to the AIEDDD Project. Any potential winning Bidder(s) will not be required to undertake business activities in Canada equal to the value of any resultant contract(s).

4. Schedule

Canada is finalizing the procurement schedule which will be communicated under a future RFI amendment.

5. Contracting Authority

Interested Respondents may submit their responses, via email, to the PSPC Contracting Authority identified below:

Melanie Martyn
Supply Team Leader
Defence and Marine Procurement Branch
Public Services and Procurement Canada / Government of Canada
melanie.martyn@tpsgc-pwgsc.gc.ca

6. Questions Submitted by Industry

All enquiries and other communications related to this RFI process shall be directed exclusively, via email, to the PSPC Contracting Authority identified above. While Canada intents to respond to Industry questions by releasing answers periodically through subsequent RFI amendments, responding to questions will be handled on a best effort basis.

Often Canada may not be in a position to answer certain questions because requirements may not yet be finalized on various aspects of the requirement. Unanswered questions are still very valuable feedback as it allows Canada to see where Industry may have concerns, or where a different approach to a requirement may be possible.

As Industry feedback is submitted and reviewed for consideration over the course of the RFI process, Canada intends to periodically release updated versions of various draft RFP documents. These updated documents often answer questions submitted by Industry.

7. Additional Information Requests

Throughout this RFI process, Public Service and Procurement Canada may request additional information, clarifications or site visits from Respondents.

8. Fairness Monitor

Canada has not engaged the services of a Fairness Monitor for this RFI process. Any resultant solicitation(s)/contract(s) that may be established from this RFI process may required the services of a Fairness Monitor, but shall be determined at that time, on a case-by-case basis.

If there is any discrepancy between the English and French document, the English document takes precedence.

W8476-226486/B
Advanced Improvised Explosive Device Detection and Defeat (AIEDDD) Project
Request for Information (RFI) Process

UNCLASSIFIED - NON CLASSIFIÉ

ANNEX "A"
QUESTIONS FOR INDUSTRY

ADMINISTRATIVE MATTERS

1. Submission of Responses
2. Industry Information Session
3. Industry Responses

    3.1 Response Format
    3.2 Language of Response
    3.3 Response Parameters
    3.4 Response Confidentiality

TECHNICAL AND FINANCIAL COSTING REQUIREMENTS

1. General
2. Technical and Financial Costing Requirements
3. Additional Comments

ANNEXES:

ANNEX A SOW - High Energy Laser System (HELS) (Word PDF)
ANNEX B Support SOW HELS (Word PDF)
ANNEX C Financial Costing HELS (Excel PDF) Part One and Part Two

ANNEX A SOW - Mini Unmanned Aerial System (MUAS) (Word PDF)
ANNEX B Support SOW MUAS (Word PDF)
ANNEX C Financial Costing MUAS (Excel PDF) Part One and Part Two

ANNEX A SOW - Mini Unmanned Ground Vehicle System (MUGVS) (Word PDF)
ANNEX B Support SOW MUGVS (Word PDF)
ANNEX C Financial Costing MUGVS (Excel PDF) Part One and Part Two

ANNEX A SOW - Small Unmanned Ground Vehicle System (SUGVS) (Word PDF)
ANNEX B Support SOW SUGVS (Word PDF)
ANNEX C Financial Costing SUGVS (Excel PDF) Part One and Part Two

If there is any discrepancy between the English and French document, the English document takes precedence.

W8476-226486/B
Advanced Improvised Explosive Device Detection and Defeat (AIEDDD) Project
Request for Information (RFI) Process

Administrative Matters

1.0 Submission of Responses

It is requested that responses are submitted by e-mail to the Contracting Authority.

Responses submitted should be in either Microsoft Word, Excel, or searchable PDF. Please note that PSCP has an email limit of 20mb so every attempt should be made to compress large files.

It is requested that Respondents provide their entire response in one submission, unless it surpasses 20mb, at which point multiple emails may be required. If this is the case, please ensure clear delineation of each submission.

The Respondent's name, return address and RFI solicitation number should be clearly visible on the response(s). Responses to this RFI will not be returned.

2.0 Industry Information Session

Should Respondents be interested in an information session, or a one on one meeting, then that should be requested in their response to PSCP.

3.0 Industry Responses

3.1 Response Format

For ease of use, and in order that the greatest value be gained from responses, Canada requests Respondents follow the structure outline under 'Technical and Financial Costing Requirements', below. There is no page limit on the information to be provided.

3.2 Language of Response

Responses may be in English or French, at the preference of the Respondent.

3.3 Response Parameters

Respondents are reminded that this is an RFI and not a bid solicitation and, in that regard, Respondents should feel free to provide their comments, concerns, and, where applicable, alternative recommendations on how the requirement may be satisfied. Also, in responding to this RFI, Respondents are asked to clearly explain any assumptions they may wish to make.

3.4 Response Confidentiality

Responders are requested to clearly identify those portions of their response that are proprietary to the responder. The confidentiality of each responder's response will be maintained. However, due to the nature of the RFI activity, responders must be aware that aspects of their response may be used as a basis for modifying the draft documents as Canada prepares for the future procurement.

If there is any discrepancy between the English and French document, the English document takes precedence.

W8476-226486/B
Advanced Improvised Explosive Device Detection and Defeat (AIEDDD) Project
Request for Information (RFI) Process

UNCLASSIFIED - NON CLASSIFIÉ

TECHNICAL AND FINANCIAL COSTING REQUIREMENTS

Respondents are requested to provide comments/feedback on the following information:

1.0 General

A brief corporate profile of the respondent (or the actual or intended respondent consortium) including name and phone number of a contact person, and an indication of level of interest in a potential Solicitation in whole or in part.

2.0 Technical and Financial Costing Requirements

Industry is encouraged to comment/provide feedback on the following documents:

There is an Acquisition SOW (Annex A) and an In-Service Support SOW (Annex B) for each of the 4 main pieces of equipment, as well as corresponding Financial Costing tables (Annex C). It is requested that responses to the financial costing requirements be returned on the spreadsheets attached.

Note: Respondents will find that the information RFI Canada will not provide the Excel spreadsheets outside of PDF format.

ANNEX A SOW - High Energy Laser System (HELS) (Word PDF)
ANNEX B Support SOW HELS (Word PDF)
ANNEX C Financial Costing HELS (Excel PDF) Part One and Part Two

ANNEX A SOW - Mini Unmanned Aerial System (MUAS) (Word PDF)
ANNEX B Support SOW MUAS (Word PDF)
ANNEX C Financial Costing MUAS (Excel PDF) Part One and Part Two

ANNEX A SOW - Mini Unmanned Ground Vehicle System (MUGVS) (Word PDF)
ANNEX B Support SOW MUGVS (Word PDF)
ANNEX C Financial Costing MUGVS (Excel PDF) Part One and Part Two

ANNEX A SOW - Small Unmanned Ground Vehicle System (SUGVS) (Word PDF)
ANNEX B Support SOW SUGVS (Word PDF)
ANNEX C Financial Costing SUGVS (Excel PDF) Part One and Part Two

3.0 Additional Comments

Are there any additional comments and/or concerns with respect to this proposed procurement that has not been addressed elsewhere? If so, what alternative solution(s) would address your concern(s)?

Respondents should provide their comments/concerns with their response submissions.

ANNEX A

STATEMENT OF WORK

FOR THE

HIGH ENERGY LASER SYSTEM

TABLE OF CONTENTS

1.0 SCOPE

1.1 Purpose

1.1.1 The purpose of this Statement of Work (SOW) is to define the work requirements for the High Energy Laser System (HELS), which will be used to engage and neutralize unexploded ordnance and improvised explosive devices.

1.2 Intended Use

1.2.1

1.3 Acronyms and Abbreviations

CA	Contracting Authority
CAF	Canadian Armed Forces
CDRL	Contract Data Requirements List
CFB	Canadian Forces Base
CFSD	Canadian Forces Supply Depot
CFTO	Canadian Forces Technical Order
CMS	Contract Master Schedule
CNCGL	Controlled & Non-Controlled Goods List
CSR	Contract Status Report
DID	Data Item Description
DMC	Demilitarization Code
DND	Department of National Defence
DPA	Defence Product Act
ECL	Export Control List
ECCN	Export Control Classification Number
EEA	Equipment Environmental Assessment
HEL	High Energy Laser
HELS	High Energy Laser System
IAW	In Accordance With
ILS	Integrated Logistics Support
ILSM	Integrated Logistics Support Manager
IP	Intellectual Property
IPC	Initial Provisioning Conference
ISO	International Organization for Standardization
ITAR	International Traffic in Arms Regulations
LIS	List of Items to be Supported
MRC	Maximum Repair Cost

NATO	North Atlantic Treaty Organization
NCAGE	NATO Commercial and Government Entity
NDID	National Defence Index of Documentation
NSN	NATO Stock Number
OEM	Original Equipment Manufacturer
OQRC	Operator Quick Reference Card
PA	Procurement Authority
PPB	Provisioning Parts Breakdown
PSPC	Public Service and Procurement Canada
R&O	Repair & Overhaul
RCE	Repair Cost Estimate
SDS	Safety Data Sheet
SOW	Statement of Work
SPTD	Supplementary Provisioning Technical Documentation
STTE	Special Tools and Test Equipment
TA	Technical Authority
USML	United States Munitions List

2.0 APPLICABLE DOCUMENTS

2.1 References

2.1.1 Whereas mentioned, the following Standards must be used for the preparation of deliverables to the extent specified in this SOW.

GOVERNMENT FURNISHED INFORMATION

REFERENCE NUMBER	PROMULGATION DATE	REFERENCE TITLE
C-01-100-100/AG-008	2018-08-01	POLICY/MANAGEMENT PROCEDURES AND GUIDELINES SPECIFICATION WRITER'S GUIDE FOR TECHNICAL DOCUMENTATION
C-02-007-000/AG-001	2016-01-01	CONTROLLED TECHNOLOGY ACCESS AND TRANSFER (CTAT) MANUAL
D-01-100-204/SF-000	2018-08-31	PREPARATION OF PREVENTIVE MAINTENANCE INSTRUCTIONS
D-01-100-205/SF-000	2000-10-31	SPECIFICATION – PREPARATION OF CORRECTIVE MAINTENANCE INSTRUCTION
D-01-100-207/SF-002	1996-07-12	SPECIFICATION – PREPARATION OF INTERIM ILLUSTRATED PARTS MANUALS FOR LAND EQUIPMENTS
D-01-100-211/SF-000	1988-12-07	SPECIFICATION – PRESERVATION, STORAGE AND HANDLING INSTRUCTION
D-01-100-214/SF-000	2020-09-30	CANADIAN FORCES SPECIFICATIONS – PREPARATION OF PROVISIONING DOCUMENTATION FOR CANADIAN ARMED FORCES EQUIPMENT
D-01-400-001/SG-000	2021-09-30	STANDARD – ENGINEERING DRAWING PRACTICES
D-01-400-002/SF-000	2018-07-31	CANADIAN FORCES SPECIFICATIONS – LEVELS OF ENGINEERING DRAWINGS
D-02-002-001/SG-001	2021-06-30	CANADIAN FORCES STANDARD – IDENTIFICATION MARKING OF DEPARTMENT OF NATIONAL DEFENCE MATERIEL
D-LM-008-001/SF-001	1986-06-30	METHODS OF PACKAGING
D-LM-008-002/SF-001	1991-08-01	SPECIFICATION FOR MARKING FOR STORAGE AND SHIPMENT
D-LM-008-011/SF-001	1988-11-10	PREPARATION AND USE OF PACKAGING REQUIREMENTS CODES
D-LM-008-036/SF-000	2020-09-30	CANADIAN FORCES SPECIFICATIONS – DEPARTMENT OF NATIONAL DEFENCE MINIMUM REQUIREMENTS FOR COMMERCIAL PACKAGING

COMMERCIALLY AVAILABLE

REFERENCE NUMBER	PROMULGATION DATE	REFERENCE TITLE
AMS-STD-595	LATEST EDITION	COLORS USED IN GOVERNMENT PROCUREMENT
NEMA IEC 60529	N/A	DEGREES OF PROTECTION PROVIDED BY ENCLOSURES - IP CODE
R.S.C., 1985, C. H-3	1985	HAZARDOUS PRODUCTS ACT
SOR/2003-289		FEDERAL HALOCARBON REGULATIONS
SOR/2008-273		PCB REGULATIONS
SOR/2012-285		PROHIBITION OF CERTAIN TOXIC SUBSTANCES REGULATIONS
SOR/2014-254		PRODUCTS CONTAINING MERCURY REGULATIONS
SOR/2016-137		OZONE-DEPLETING SUBSTANCES AND HALOCARBON ALTERNATIVES REGULATIONS
SOR/2018-196		PROHIBITION OF ASBESTOS AND PRODUCTS CONTAINING ASBESTOS REGULATIONS
STANAG 2290 ED. 2	18 NOV 2010	NATO UNIQUE IDENTIFICATION OF ITEMS

2.2 Order of Precedence

2.2.1 In the event of conflict between the content in this SOW and the referenced documents, the content of this SOW will take precedence.

3.0 PROJECT MANAGEMENT

3.1 Project Manager

3.1.1 The Contractor must designate a Project Manager with the responsibilities to coordinate, execute, and manage the Contractor's project management activities for the Contract. The Contractor's Project Manager must have the total responsibility for all works required under the Contract.

3.1.2 The Contractor's Project Manager must be the primary point of contact between the Contractor, the DND Technical Authority (TA), and the PSPC Contracting Authority for all issues related to the Contract.

3.2 Contract Master Schedule

3.2.1 The Contractor must provide a Contract Master Schedule (CMS) IAW Contract Data Requirement List (CDRL) HELS-PM-001 at Appendix A2.2 (page 26) to ANNEX A and its associated Data Item Deliverable (DID) HELS-PM-001 at Appendix A3.3 (page 33) to ANNEX A.

3.2.2 The Contractor must use the approved CMS as the primary schedule for managing the project.

3.2.3 The Contractor may amend the approved CMS, without first obtaining the TA's and Contracting Authority's approval, as long as:

3.2.3.1 Payments under the contract are not affected;

3.2.3.2 The milestones dates are not affected; and

3.2.3.3 The ability of Canada to meet its obligations under the contract is not affected.

3.3 Contract Status Report

3.3.1 The Contractor must provide a Contract Status Report (CSR) IAW CDRL HELS-PM-002 at Appendix A2.2 (page 26) to ANNEX A and its associated DID HELS-PM-002 at Appendix A3.4 (page 35) to ANNEX A.

3.4 Project Meetings

3.4.1 Meeting Organization and Coordination

3.4.1.1 The Contractor's Project Manager must be present at the Kick-off Meeting, and at other meetings when requested by Canada. If the Project Manager does not have final approval authority for decision making and changes, then the person that has that final approval authority must also be present.

3.4.2 Kick-off Meeting

3.4.2.1 The Contractor must hold and chair a Kick-off Meeting (at the Contractor's facility) no later than 21 calendar days after contract award to review and secure a common understanding of the following:

3.4.2.1.1 The requirements of the Contract;

3.4.2.1.2 The requirements of the SOW;

3.4.2.1.3 General overview of the project, risks, schedule and communication channels to follow, and

3.4.2.1.4 Other contractual and programmatic issues associated with the project as agreed between the TA, CA and the Contractor.

3.4.2.2 Refer to Meeting Documentation requirements found at ANNEX A para. 3.4.5.

3.4.3 Integrated Logistics Support (ILS) Meeting

3.4.3.1 The Contractor must hold and chair an ILS Meeting following the closure of the Kick-Off Meeting (see 3.4.2), in order to:

3.4.3.1.1 Review and secure a common understanding of the requirements expressed in the ILS CDRLs and DIDs, DND Canadian Forces Technical Orders (CFTO)s and specifications; and,

3.4.3.1.2 Discuss possible sparing strategies and concepts, lowest replaceable units, and lines of maintenance.

3.4.3.2 Refer to Meeting Documentation requirements found at ANNEX A para. 3.4.5.

3.4.4 Other meetings

3.4.4.1 The Contractor and the TA may schedule informal reviews, such as teleconferences, video conferences, briefings and technical interchange meetings, to help achieve the requirements of the Contract.

3.4.5 Meeting Documentation

3.4.5.1 The Contractor must prepare and deliver a meeting agenda for all formal meetings and conferences, and prepare and deliver the meeting minutes afterwards.

3.4.5.1.1 The Contractor must provide the Meeting Agenda(s) IAW CDRL HELS-PM-003 at Appendix A2.2 (page 26) to ANNEX A and its associated DID HELS-PM-003 at Appendix A3.5 (page 37) to ANNEX A.

3.4.5.1.2 The Contractor must record, prepare, and provide the Meeting Minutes of each meeting IAW CDRL HELS-PM-004 at Appendix A2.2 (page 26) to ANNEX A and its associated DID HELS-PM-004 at Appendix A3.6 (page 38) to ANNEX A.

3.4.5.2 No change in the interpretation of the SOW, Technical Specification, cost, and schedule, as defined in the Contract, may be authorized by the minutes of a meeting. Such changes will require formal contract amendment by the CA.

4.0 INTEGRATED LOGISTICS SUPPORT (ILS)

4.1 Maintenance Concept

4.1.1 The HELS will be maintainable by CAF operators and technicians in a field environment as prescribed for each item of equipment:

4.1.1.1 **Operator Maintenance** – consisting of maintenance that will not require Special Tools and Test Equipment (STTE) to complete, as well as equipment cleaning. Task duration generally less than one (1) hour.

4.1.1.2 **Technician Maintenance, First Line** – consisting of preventive and minor corrective maintenance tasks by repair or replacement of parts, and could require STTE to complete this maintenance. Task duration generally less than four (4) hours.

4.1.2 The more in-depth maintenance tasks, consisting of corrective maintenance tasks, reconditioning of assemblies and component rebuilds, will be done through the Support Contract.

4.2 Instruments, Decals, Data Plates and Warnings

4.2.1 The Contractor must deliver all instruments, decals and data plates marked in metric units.

4.2.2 Where international symbols are not possible, the Contractor must provide bilingual markings in English and Canadian French, as per paragraph 4.3.5.

4.2.3 The Contractor must provide warning and precautionary data plates in both official languages of Canada (English and Canadian French) in order to protect personnel and equipment, as per paragraph 4.3.5.

4.3 Technical Publication Package

4.3.1 The Contractor must prepare and deliver the following Technical Publications:

4.3.1.1 Operator Manual

4.3.1.1.1 The Contractor must provide an Operator Manual IAW CDRL HELS-ILS-201 at Appendix A2.2 (page 26) and its associated DID HELS-ILS-201 at Appendix A3.7 (page 39) to this ANNEX A.

4.3.1.2 Repair Manual

4.3.1.2.1 The Contractor must provide a Repair Manual IAW CDRL HELS-ILS-202 at Appendix A2.2 (page 26) and its associated DID HELS-ILS-202 at Appendix A3.8 (page 41) to this ANNEX A.

4.3.1.3 Installation Instructions

4.3.1.3.1 The Contractor must provide Installation Instructions IAW CDRL HELS-ILS-203 at Appendix A2.2 (page 26) to Annex A, and its associated DID HELS-ILS-203 at Appendix A3.9 (page 43) to this ANNEX A.

4.3.1.4 Illustrated Parts Manual

4.3.1.4.1 The Contractor must provide an Illustrated Parts Manual IAW CDRL HELS-ILS-204 at Appendix A2.2 (page 26) and its associated DID HELS-ILS-204 at Appendix A3.10 (page 45) to this ANNEX A.

4.3.1.4.2 The Illustrated Parts Manual does not need to be provided in Canadian French.

4.3.1.5 Operator Training Package

4.3.1.5.1 The Contractor must provide an Operator Training Package IAW CDRL HELS-ILS-205 at Appendix A2.2 (page 26) and its associated DID HELS-ILS-205 at Appendix A3.11 (page 47) to ANNEX A.

4.3.1.6 Preservation, Storage and Reactivation Instructions

4.3.1.6.1 The Contractor must provide a Preservation, Storage and Reactivation Instructions IAW CDRL HELS-ILS-206 at Appendix A2.2 (page 26) and its associated DID HELS-ILS-206 at Appendix A3.12 (page 49) to ANNEX A.

4.3.1.7 Stowage, Shipping and Handling Instructions

4.3.1.7.1 The Contractor must provide a Stowage, Shipping and Handling Instructions IAW CDRL HELS-ILS-207 at Appendix A2.2 (page 26) and its associated DID HELS-ILS-207 at Appendix A3.13 (page 51) to ANNEX A.

4.3.2 Front Matter

4.3.2.1 The Contractor must include the following in each Technical Publication:

4.3.2.1.1 A cover page (a template will be provided by the Integrated Logistics Support Manager (ILSM)) showing the date the publication was issued and the model/system designation;

4.3.2.1.2 A List of Effective Pages;

4.3.2.1.3 A Revision Control Table;

4.3.2.1.4 A detailed Table of Contents and List of Figures & Tables; and

4.3.2.1.5 An Acronyms and Abbreviations table

4.3.3 Supplementary Information

4.3.3.1 The Contractor must provide supplementary information, in the portions of text that require it, with one or more of the following notices, in the order listed:

4.3.3.1.1 **Danger.** The danger advisory will be used to draw attention to an extreme, violent and continuous hazard to life;

4.3.3.1.2 **Warning.** The warning advisory will be used to emphasize an operating or maintenance procedure, practice, condition, statement, which if not strictly observed, could result in injury to or death of personnel;

4.3.3.1.3 **Caution.** The caution advisory will be used to emphasize an operating or maintenance procedure, practice, condition, statement, which if not strictly observed, could result in maintenance, damage to or destruction of equipment, loss of mission effectiveness or long-term health hazards to personnel;

4.3.3.1.4 **Note.** The note will be used to point out a procedure, event or practice that it is desirable to highlight; and,

4.3.3.1.5 **Example.** The example will be used when required to clarify the preceding text.

4.3.4 Notice - Intellectual Property Rights

4.3.4.1 **For deliverables that contain only Foreground Information**, the Contractor must include a notice of Intellectual Property Rights in or on each deliverable. The Contractor must record that Canada has licensed Intellectual Property Rights as per Contract No. XXXXX, and must state that the deliverable contains no Background Information, and will identify the Contractor (if applicable) and each applicable grantor to the Contractor of those rights in the Foreground Information.

4.3.4.2 **For deliverables that contain only Background Information**, the Contractor must include a notice of Intellectual Property Rights in or on each deliverable. The Contractor must record that Canada has licensed Intellectual Property Rights as per Contract No. XXXXX, and must state that the deliverable contains only Background Information, and will identify the Contractor (if applicable) and each applicable grantor to the Contractor of those rights in the Background Information.

4.3.4.3 **For deliverables that consist of Background Information and Foreground Information**, the Contractor must include a notice of Intellectual Property Rights in or on each deliverable, such that the Foreground Information and the Background Information may be distinguished from each other. The Contractor must record that Canada has licensed Intellectual Property Rights as per Contract No. XXXXX, and must identify the Contractor (if applicable) and each applicable grantor to the Contractor of those rights in the Background Information and in the Foreground Information.

4.3.5 The Contractor must provide the following certificates, for each accepted first-language Publication produced under ANNEX A1 paragraph 4.3, to the DND ILSM for approval:

4.3.5.1 DND590 - Certificate of Validation; and

4.3.5.2 DND591 - Certificate of Compliance.

4.3.6 Official Language Requirements

4.3.6.1 The Contractor must deliver all Technical Publications in English and Canadian French (unless indicated above).

4.3.6.2 The Contractor must have all Technical Publications translated by certified translators, such as members of an authorized provincial association of translators, to ensure the quality of translated text.

4.3.6.3 In bilingual publications, the Contractor must use the same images within the French and English versions, except for any software-based images (such as screenshots) if that software's language can be selected between English and French. In such a case, the Contractor must use the software-based images in the language of the publication they supplement.

4.3.6.4 The Contractor must ensure all translations are consistent with approved DND terminology. Approved terminology sources, in order of priority, are as follows:

4.3.6.4.1 Canadian Oxford Dictionary Second Edition (for English);

4.3.6.4.2 Le Petit Robert Edition 2017 (for French); and

4.3.6.4.3 Termium, PSPC Translation Bureau Linguistic Data Bank (http://www.termiumplus.gc.ca/);

4.3.6.4.4 International Electrotechnical Vocabulary (https://www.electropedia.org/)

4.3.6.5 The Contractor must review and accept responsibility for the validity of all (both their own and all sub-Contractors) information found in the Technical Publications.

4.3.6.6 The Contractor must provide to the DND ILSM for approval, a certificate of Translation Accuracy Check (DND2515) for each translated Publication produced under para 4.3 of ANNEX A1.

4.4 Provisioning Documentation

4.4.1 The Provisioning Documentation (PD) lists and describes in detail the parts that make up the HELS as well as all specialized and specific items required to support the use and maintenance of the HELS. The PD allows the HELS's Integrated Logistics Support Manager (ILSM) to plan and implement a sparing and support strategy.

4.4.2 Included in the PD are all the procurable parts — either from the Contractor or a third-party — of the HELS to the lowest replaceable unit. Also considered procurable parts are the consumables required to operate and maintain the HELS (chemicals, specific lubricants, etc.) and specialized equipment (special tools, training aids, transport containers, etc.) specific to the HELS.

4.4.3 The Contractor must prepare and deliver the following Provisioning Documentation:

4.4.3.1 Provisioning Parts Breakdown

4.4.3.1.1 The Contractor must provide a Provisioning Parts Breakdown IAW CDRL HELS-ILS-208 at Appendix A2.2 (page 26) and its associated DID HELS-ILS-208 at Appendix A3.14 (page 53) to this ANNEX A.

4.4.3.2 Supplementary Provisioning Technical Documentation

4.4.3.2.1 The Contractor must provide Supplementary Provisioning Technical Documentation IAW CDRL HELS-ILS-209 at Appendix A2.2 (page 26) and its associated DID HELS-ILS-209 at Appendix A3.15 (page 55) to this ANNEX A.

4.4.3.3 Special Tools & Test Equipment List

4.4.3.3.1 The Contractor must provide a Special Tools & Test Equipment List IAW CDRL HELS-ILS-210 at Appendix A2.2 (page 26) and its associated DID HELS-ILS-210 at Appendix A3.16 (page 56) to this ANNEX A.

4.4.3.4 Materiel Identification Data Set

4.4.3.4.1 The Contractor must provide a Materiel Identification Data Set (MIDS) IAW CDRL HELS-ILS-211 at Appendix A2.2 (page 26) to Annex A, and its associated DID HELS-ILS-211 at Appendix A3.17 (page 58) to this ANNEX A.

4.5 Identification Plates

4.5.1 The Contractor must provide Identification Plates – Design Template & Populated Designs IAW CDRL HELS-ILS-212 at Appendix A2.2 (page 26) and its associated DID HELS-ILS-212 at Appendix A3.18 (page 59) to this ANNEX A.

4.5.2 The Contractor must attach Identification Plates to the following components for ease of tracking within the Canadian Forces Supply System:

4.5.2.1 Prime Equipment;

4.5.2.2 Major Spares;

4.5.2.3 STTE;

4.5.2.4 Training Equipment;

4.5.2.5 Transportation, Shipping, Storage Containers that are not single-use;

4.5.2.6 Support Equipment (excluding common tools), and

4.5.2.7 Automatic Test Equipment.

4.5.3 Unique Identification (UID) is the allocation of a unique number to an individual item using a standard procedure which is globally accepted. UID makes it possible to store and exchange data on an item's usage and maintenance history using national and international systems. UID can be used in the logistics chain to track and trace materiel more effectively. Implementing UID-marking will lead to the optimization of the logistical footprint.

4.5.4 The Contractor must generate and affix Unique Item Identifier(s), in accordance with STANAG 2290 Edition 2 - NATO UNIQUE IDENTIFICATION OF ITEMS, on the Identification Plates of the following serially-managed items, and be of such quality as to remain machine readable for the expected life of the item:

4.5.4.1 High Energy Laser (HEL) (see A1.1.1.2.1);

4.5.4.2 HEL Cooling System (see A1.1.1.2.2);

4.5.4.3 Remote Weapon Station (see A1.1.1.2.3);

4.5.4.4 HEL Control Station (see A1.1.1.2.4);

4.5.4.5 All components that require calibration; and

4.5.4.6 All components that may require software or firmware updates.

4.6 Controlled & Non-Controlled Goods List

4.6.1 The Contractor must provide the Controlled & Non-Controlled Goods List with the Demilitarization Code (DMC) IAW HELS-ILS-213 at Appendix A2.2 (page 26) and its associated DID HELS-ILS-213 at Appendix A3.19 (page 61) to this ANNEX A.

4.7 Identification Labels for Storage & Shipment and Packaging Codes

4.7.1 The Contractor must supply all parts and equipment, packaged and packed as per D-LM-008-001/SF-001 following:

4.7.1.1 Level A Full Military Package;

4.7.1.2 Level A Full Military Pack;

4.7.2 The Contractor must label all packaging, produced under 4.7.1 above, as per D-LM-008-002/SF-001, using D-LM-008-011/SF-001 to prepare the required codes for packaging and preservation.

4.7.3 The Contractor must provide Identification Labels for Storage & Shipment and Packaging Codes IAW CDRL HELS-ILS-214 at Appendix A2.2 (page 26) to Annex A, and its associated DID HELS-ILS-214 at Appendix A3.20 (page 63) to this ANNEX A.

4.7.4 For serially managed items, the Contractor must apply the Unique Item Identifier(s), in a machine readable form, to the outside of any package of uniquely identified materiel where the UID data matrix is not easily machine-readable through the packaging material.

4.7.4.1 The Unique Item Identifier and its component data elements are to be replicated in a PDF 417 barcode in accordance with STANAG 2290 (Edition 2).

4.8 List of Items to be Supported (for Support SOW)

4.8.1 The Contractor must provide a List of Items to be Supported IAW CDRL HELS-ILS-215 at Appendix A2.2 (page 26) to Annex A, and its associated DID HELS-ILS-215 at Appendix A3.21 (page 65) to this ANNEX A.

4.9 Training Session

4.9.1 The Contractor must provide one (1) Training Session after delivery of the first HELS.

4.9.1.1 Scheduling of the Training Session will be done after contract award, and jointly planned between the DND and the Contractor.

4.9.2 The Contractor must provide one (1) Training Session consisting of:

4.9.2.1 Operator Training Session (train-the-trainer type) for one (1) to 10 students per course, with a course length of two (2) days.

4.9.3 The Contractor must provide the Training Session in English. The instructor(s) must be bilingual or have assistance from a bilingual Subject Matter Expert in order to understand and answer questions from students in both official languages; English and Canadian French.

4.9.4 The Contractor must provide Instructor(s) that are Subject Matter Experts on the HELS equipment being provided.

4.9.5 The Contractor must use the approved and accepted **Operator Training Package** for the Training Session(s), and course lessons must follow the content found within the training package.

4.9.6 The Contractor must provide the course material listed within the **Operator Training Package** CDRL as being 'Issued to Students at Training Session(s)', and all course material and handouts must be provided in English and Canadian French.

4.9.7 The Contractor must use the HELS(s) and additional training material identified in the **Operator Training Package Instructor Lesson Plan**, for the Training Session.

4.9.7.1 The Contractor must provide the additional training material that is listed in the **Operator Training Package Instructor Lesson Plan** as 'supplied by the Contractor'.

4.9.7.2 The Contractor must set-up the HELS(s) and additional training material that is listed in the **Operator Training Package Instructor Lesson Plan** as 'supplied by the Contractor', for the Training Session.

5.0 ENVIRONMENTAL MANAGEMENT AND ASSESSMENT

5.1 General

5.1.1 In accordance with the Prohibition of Certain Toxic Substances Regulations (SOR/2012-285), the Contractor must not incorporate the substances listed under this regulation in any part of the equipment.

5.1.2 In accordance with the Prohibition of Asbestos and Products containing Asbestos Regulations (SOR/2018-196), the Contractor must offer asbestos-free equipment.

5.1.3 In accordance with the Federal Halocarbon Regulations (SOR/2003-289) and the Ozone-depleting Substances and Halocarbon Alternatives Regulations (SOR/2016-137), for any halocarbons that are incorporated into the equipment, the Contractor must comply with regulations SOR/2003-289 and SOR/2016-137. If such substances must be used, the Contractor must:

5.1.3.1 Inform the Technical Authority by identifying the substance(s).

5.1.3.2 Identify the specific location within the equipment and the quantity.

5.1.4 In accordance with the Products Containing Mercury Regulations (SOR/2014-254), if mercury is present in any part of the equipment, the Contractor must comply with the mercury content limit in regulation SOR/2014-254. If such substances must be used, the Contractor must:

5.1.4.1 Inform the Technical Authority by identifying the substance(s).

5.1.4.2 Identify the specific location within the equipment and the quantity.

5.1.5 In accordance with the Polychlorinated Biphenyls (PCBs) Regulations (SOR/2008-273), if PCBs are present in any part of the equipment, the Contractor must comply with the regulation, the Contractor must:

5.1.5.1 Inform the Technical Authority by identifying the substance(s).

5.1.5.2 Identify the specific location within the equipment and the quantity.

5.1.5.3 Certify that there is no technically or economically feasible PCB-free alternative.

5.2 Environmental Management System

5.2.1 The Contractor must implement and maintain an Environmental Management System which is consistent with the principles presented in ISO 14001. Certification to this standard is preferred but not mandatory.

5.2.2 The Contractor must have a formalized set of procedures and control measures in place to demonstrate environmental compliance and minimize environmental impact of the work.

5.2.3 Prior to the commencement of work, the Contractor must have in place an Emergency / Spill Response Plan and also processes and procedures for the identification, management, handling and disposal of all substances, pollutants and material covered by

the applicable municipal, territorial, provincial, federal environmental protection statutes and regulations.

5.2.4 The Contractor must update the Equipment Environmental Assessment (EEA), after it is delivered, under the following circumstances:

5.2.4.1 There are changes related to the items identified on the Hazardous Substances & Chemical Products table; or

5.2.4.2 New items/components are introduced as a result of configuration changes or modifications that contain hazardous substances and chemical products identified in the EEA.

5.3 Environmental Packaging Labels

5.3.1 The Contractor must label and ship goods falling within the Hazardous Products Act, R.S.C. 1985, C. H-3 and regulation(s) there under, in accordance with the said Act and regulation(s).

5.3.1.1 The Contractor must clearly identify the contents of the hazardous material with labels, and the Safety Data Sheet must explain what those hazards are.

5.4 Equipment Environmental Assessment

5.4.1 The Contractor must prepare and submit an Equipment Environmental Assessment (EEA) IAW CDRL HELS-ILS-216 at Appendix A2.2 (page 26) to Annex A, and its associated DID HELS-ILS-216 at Appendix 0 (page 69) to this ANNEX A.

5.4.2 The Contractor may provide confidential information in a separate document. Note: Proprietary information will be treated with confidentiality.

6.0 TECHNICAL REQUIREMENTS

6.1 Overview

6.1.1 The Contractor must comply with all specified requirements of the HELS, stated in:

6.1.1.1 A1.0 APPENDIX: HELS TECHNICAL SPECIFICATION

A1.0 APPENDIX: HELS TECHNICAL SPECIFICATION

A1.1 System Requirements

A1.1.1 General

A1.1.1.1 The High Energy Laser System (HELS) must engage and neutralize unexploded ordnance (UXO) and improvised explosive devices (IEDs) with a high energy laser beam.

A1.1.1.1.1 The HELS beam must be delivered on target through optics mounted on a Remote Weapon System (RWS), which will also hold a .50 cal. machine gun (already in-service and provided by Canada).

A1.1.1.2 The HELS must consist of the following components, and is further described in detail under the **System Component Requirements** section:

A1.1.1.2.1 One (1) High Energy Laser (HEL);

A1.1.1.2.2 One (1) HEL Cooling System;

A1.1.1.2.3 One (1) RWS, with mounting for .50 cal. Machine gun and HEL

A1.1.1.2.4 Control Station, and

A1.1.1.2.5 Reconnaissance Software;

A1.1.1.3 The HELS must include all tools required to setup and maintain the HELS in accordance with the **Operator Maintenance** Concept ANNEX A paragraph 4.1.1.1 (page 10).

A1.1.1.4 The HELS must include the Technical Publication(s) listed within the CDRL(s) as being ‘Issued with each HELS’.

A1.1.2 Integration with Vehicle

A1.1.2.1 The HELS must be integrated with and mounted on a 6X6 Cougar MRAP vehicle.

A1.1.2.1.1 The 6x6 Cougar MRAP vehicle hull structure is already reinforced to support an RWS that can hold and fire a .50 cal. Machine Gun.

A1.1.2.1.2 The Technical Data Package for the 6x6 Cougar MRAP vehicle is controlled goods, and will be released later on with a retransfer.

A1.1.2.2 The HELS integration must include a door sensor/switch, making it impossible to fire the laser when the vehicle doors are open.

A1.1.2.2.1 The HELS door sensor/switch must be positioned in such way that it won't interfere with personnel mounting and dismounting the vehicle.

A1.1.2.2.2 The HELS door sensor/switch must located and made to not be clogged by dirt and mud.

A1.1.2.3 The HELS power management, storage, and distribution system integration must be done from the vehicle electrical system (an upgrade of the vehicle electrical system is possible).

A1.1.2.3.1 The 6x6 Cougar MRAP vehicle power distribution is a normal setup using a 570A alternator, with 180A available for use in the HELS.

A1.1.2.4 The 6x6 Cougar MRAP vehicle integration must include tire shrapnel protection to protect front and the two rear tires of the vehicle during the target engagement.

A1.1.2.4.1 The tire shrapnel protection, if permanently installed, must not change the vehicle mobility in any way.

A1.1.2.4.2 The tire shrapnel protection, if not permanent, must not take more than 5 minutes to be installed and removed.

A1.2 System Component Requirements

A1.2.1 HEL

A1.2.1.1 The HEL must be an infrared continuous wave solid-state laser single-mode technology.

A1.2.1.2 The HEL must fire continuously for no less than three (3) minutes at maximum power.

A1.2.1.3 HEL Power

A1.2.1.3.1 The HEL power must not be less than 3kW.

A1.2.1.3.2 The HEL power must be adjustable from the Control Station in increments of 10% to its maximum optical power.

A1.2.1.4 The HEL must have a manual or remotely-operated optics protection cover.

A1.2.2 HEL Cooling System

A1.2.2.1 The HEL Cooling System must be independent from the vehicle's cooling system.

A1.2.2.2 The HEL Cooling System must cool down the HEL allowing for a continuous firing time of no less than three (3) minutes at maximum power.

A1.2.3 RWS

A1.2.3.1 The HEL must be mounted on a stabilized RWS, along with a Government-furnished 0.50 cal. machine gun.

A1.2.3.2 The RWS with HEL must have a minimum engagement distance of 50m or less.

A1.2.3.3 The RWS with HEL and 0.50 cal. machine gun must not reduce the maximum range of the 0.50 cal. machine gun.

A1.2.3.4 The RWS must have a green laser pointer, visible in daytime under sunlight, bore-sighted with the HEL.

A1.2.3.5 **RWS Optics**

A1.2.3.5.1 The RWS Optics must be bore-sighted with the HEL with an optical magnification to have an aiming precision of no more than 1cm at 300m.

A1.2.3.5.2 The RWS Optics must be the same for the 0.50 cal. machine gun and for the HEL.

A1.2.3.5.3 The RWS Optics must focus the optical beam to engage smaller targets at the maximum 0.50 cal. range.

A1.2.3.5.4 The RWS Optics must have a zoom powerful enough to accurately engage a target at the maximum 0.50 cal. range.

A1.2.3.5.5 The RWS Optics must have a laser rangefinder with an accuracy of no more than +/- 1m at the maximum 0.50 cal. range.

A1.2.3.5.6 The RWS Optics must have a thermal camera and visible/short-wave infrared camera.

A1.2.3.5.7 The RWS Optics must be color for daytime operation.

A1.2.4 **Control Station**

A1.2.4.1 The Control Station must be operated by one (1) operator, and must control the RWS and the following equipment mounted on the RWS:

A1.2.4.1.1 RWS Optics;

A1.2.4.1.2 HEL;

A1.2.4.1.3 0.50 cal. machine gun;

A1.2.4.1.4 Laser pointer;

A1.2.4.1.5 Laser rangefinder; and

A1.2.4.1.6 Reconnaissance software.

A1.2.4.2 The Control Station screen must have the following features:

A1.2.4.2.1 Size of no less than 457mm, measured diagonally;

A1.2.4.2.2 Display must be in color and have an indicative crosshair at the location where the HEL beam and the 0.50 cal. machine gun will impact the target;

A1.2.4.2.3 Have no less than a 640X480 resolution, and

A1.2.4.2.4 Have adjustable brightness for daylight and low-light viewing;

A1.2.4.3 The Control Station must rapidly switch between the HEL and the .50 cal machine gun.

A1.2.5 **Reconnaissance Software**

A1.2.5.1 The Reconnaissance Software must conduct reconnaissance on UXOs and IEDs from the RWS Optics at a distance of no less than 300m with the following features:

A1.2.5.1.1 Control the optical focus and zoom to read all markings on exposed 155mm howitzer UXO to determine type and attack method;

A1.2.5.1.2 Accurately measure from the Control Station screen to determine munition diameter and length with a measurement range of no less than 40mm to 3500mm;

A1.2.5.1.3 Target location from the GPS input coming from the 6x6 Cougar vehicle;

A1.2.5.1.4 Recording video during the HEL engagement;

A1.2.5.1.5 Target picture snap shot;

A1.2.5.1.6 Draw and put annotations on the pictures from the Control Station, and

A1.2.5.1.7 Exporting information on USB stick or similar electronic storage device.

A1.3 Physical Requirements

A1.3.1 **Colour**

A1.3.1.1 The HELS must have the predominant exterior colour (so that it contributes to and does not compromise the vehicle's camouflage) of:

A1.3.1.1.1 Flat/matte finish earth tone;

A1.3.1.2 Items that need to be painted to meet this requirement must be painted using the following paint colour (IAW AMS-STD-595) and must have a flat/matte finish:

A1.3.1.2.1 33446 Desert Tan;

A2.0 APPENDIX: CONTRACT DATA REQUIREMENTS LIST

A2.1 Management and Explanation of the CDRL

A2.1.1 Management of Data Items

A2.1.1.1 The Contractor must review, update and deliver amendments, or confirm the continuing accuracy of data items annotated with a maintenance period, in accordance with the CDRL.

A2.1.1.2 The Contractor must deliver amended, reissued or resubmitted data items to the location(s) and in the format and quantities specified in the CDRL for the initial submission of the data items.

A2.1.2 Explanation of the CDRL

A2.1.2.1 **CDRL Line Number** – This field provides the unique sequential number that identifies each data item within different functional groups (eg, PM-001, SE-101, & ILS-201).

A2.1.2.2 **CDRL Title** – This field identifies the title of the data item.

A2.1.2.3 **SOW Para Ref** – This field shows the paragraph in the SOW where the data item is stipulated. There may be multiple references to the data item in the SOW, but generally only the first (or one) reference is shown in the CDRL.

A2.1.2.4 **Version** – This field identifies the particular delivery of a data item during its lifecycle (ie, draft, final).

A2.1.2.5 **Delivery Schedule** – This field specifies the date(s) and/or events by which the data item is required to be delivered. The date of delivery applies to all delivery locations and quantities unless otherwise specified. Following are some of the abbreviations and symbols used with this column:

A2.1.2.5.1 'KO' means the Kick-Off Meeting date;

A2.1.2.5.2 Numerals indicate the number of Calendar Days, unless specified otherwise;

A2.1.2.5.3 '+' means after the specified date or event; and

A2.1.2.5.4 '-' means before the specified date or event.

A2.1.2.5.5 If a data item is required to be delivered before an event having a duration of greater than one day, delivery date must be calculated from the first day of that event. If a data item is required to be delivered after an event having a duration of greater than one day, the delivery date must be calculated from the last day of that event.

A2.1.2.6 **Quantity** – This field specifies the total number of data items to be delivered to the associated delivery location(s), including the number of hard (H) and soft (S) copies. When both hard and soft copies are requested, the action copy will be indicated in the notes column.

A2.1.2.7 **Addressee** – This field shows the short title of the DND representative to whom the hard and soft copies of the data items must be delivered. The action hard copy of the data item must be delivered to the first nominated location in this field.

A2.1.2.8 **Data Item Description Reference** – This field provides the identification of the DID with which the data item must comply.

A2.1.2.9 **DND Action Period** – This field defines the number of Calendar Days available to the DND to action the data item and respond to the Contractor, if that action requires a response.

A2.1.2.9.1 The period begins upon the date the action copy of the data item is received at the first nominated addressee.

A2.1.2.9.2 The action period applies to all deliveries, including first deliveries, amendments and re-issues. If a data item is delivered earlier than the first delivery date shown in the CDRL, the DND is not obliged to action it until after that date. If the action period states 'by MSR' for a data item delivered prior to a Mandated System Review (MSR), the action period ends when the minutes for that MSR are approved.

A2.1.2.10 **DND Action Required** – This field indicates the purpose for which the data item is being submitted to the DND, which will either be for Review, Approval or Acceptance.

A2.1.2.11 **Maintenance** – This field specifies either the timings or the time intervals, after each delivery, at which the data item must be reviewed by the Contractor and either have its continuing accuracy status confirmed in writing, or be updated and reissued. The Maintenance column does not apply to draft or preliminary versions of data items. The following abbreviations and codes are applicable to this column:

A2.1.2.11.1 xM – every x calendar months;

A2.1.2.11.2 R – to enable it to be considered at each MSR set out in the System Engineering program;

A2.1.2.11.3 SA – to enable it to be provided for the purposes of conducting Acceptance of each System;

A2.1.2.11.4 FA – to enable it to be provided for the purposes of Final Acceptance; and

A2.1.2.11.5 NA or blank – not applicable.

A2.1.2.12 Notes: Where necessary, additional explanatory information relating to a CDRL data item is provided in this column.

A2.2 CDRL Item List

CDRL #	CDRL Title	SOW Para Ref	Version	Delivery Schedule	Qty	Addressee	DID # and Ref	DND Action Period	DND Action Required	Maint	Notes
HELS-PM-001	Contract Master Schedule	Para. 3.2.1 (pg. 8)	Draft	KO	1S	TA	HELS-PM-001	14	Review		Update aligned with Contract Status Report
			Revised or Final	DND Comments + 14	1S	TA, CA, PA, ILSM	App. A3.3 (pg. 33)	7	Review or Acceptance		
			Updates	With Contract Status Report, when changed	1S	TA, CA, PA, ILSM			Review		
HELS-PM-002	Contract Status Report	Para. 3.3.1 (pg. 8)	Draft	KO+28	1S	TA, ILSM	HELS-PM-002	14	Review		
			Revised or Final	DND Comments + 7	1S	TA, CA, PA, ILSM	App. A3.4 (pg. 35)	7	Review or Acceptance		
			Updates	Monthly	1S	TA, CA, PA, ILSM			Review		
HELS-PM-003	Meeting Agenda	Para. 3.4.5.1.1 (pg. 9)	Draft	Meeting Date - 7	1S	CA, TA, PA	HELS-PM-003	5	Review		
			Revised	Meeting Date - 1	1S	CA, TA, PA	App. A3.5 (pg. 37)				
			Final	Meeting Date	1H	CA, TA, PA		7	Review or Acceptance		
HELS-PM-004	Meeting Minutes	Para. 3.4.5.1.2 (pg. 9)	Draft	Meeting Date + 7	1S	CA, TA, PA	HELS-PM-004	7	Review		
			Revised or Final	DND Comments + 7	1S	CA, TA, PA	App. A3.6 (pg. 38)	7	Review or Acceptance		
HELS-ILS-201	Operator Manual	Para. 4.3.1.1.1 (pg. 10)	Draft English	KO + 56	1S, 1H	ILSM	HELS-ILS-201	21	Review		Hard copy is the action copy.
			Revised or Final English	DND Comments + 21	1S, 1H	ILSM	App. A3.7 (pg. 39)	14	Review or Acceptance		
			Draft Bilingual	Acceptance of English Operator Manual + 42	1S, 1H	ILSM		14	Review		

CDRL #	CDRL Title	SOW Para Ref	Version	Delivery Schedule	Qty	Addressee	DID # and Ref	DND Action Period	DND Action Required	Maint	Notes
			Revised or Final Bilingual	DND Comments + 14	1S, 1H	ILSM		14	Review or Acceptance		
			Final		1H	Issued with each HELS					
HELS-ILS-202	Repair Manual	Para. 4.3.1.2.1 (pg. 10)	Draft English	KO + 63	1S, 1H	ILSM	HELS-ILS-202	21	Review		Hard copy is the action copy.
			Revised or Final English	DND Comments + 21	1S, 1H	ILSM	App. A3.8 (pg. 41)	14	Review or Acceptance		
			Draft Bilingual	Acceptance of English Repair Manual + 42	1S, 1H	ILSM		14	Review		
			Revised or Final Bilingual	DND Comments + 14	1S, 1H	ILSM		14	Review or Acceptance		
			Final		1H	Issued with each HELS					
HELS-ILS-203	Installation Instructions	Para. 4.3.1.3.1 (pg. 10)	Draft English	KO + 70	1S, 1H	ILSM	HELS-ILS-203	21	Review		Hard copy is the action copy.
			Revised or Final English	DND Comments + 21	1S, 1H	ILSM	App. A3.9 (pg. 43)	14	Review or Acceptance		
			Draft Bilingual	Acceptance of English Installation Instructions + 42	1S, 1H	ILSM		14	Review		
			Revised or Final Bilingual	DND Comments + 14	1S, 1H	ILSM		14	Review or Acceptance		
HELS-ILS-204	Illustrated Parts Manual	Para. 4.3.1.4.1 (pg. 11)	Draft	KO + 49	1S, 1H	ILSM	HELS-ILS-204	14	Review		Hard copy is the action copy.
			Revised or Final	DND Comments + 14	1S, 3H	ILSM	App. A3.10 (pg. 45)	14	Review or Acceptance		

CDRL #	CDRL Title	SOW Para Ref	Version	Delivery Schedule	Qty	Addressee	DID # and Ref	DND Action Period	DND Action Required	Maint	Notes
HELS-ILS-205	Operator Training Package	Para. 4.3.1.5.1 (pg. 11)	Draft English	Acceptance of English Operator Manual + 14	1S, 1H	ILSM	HELS-ILS-205	14	Review		Hard copy is the action copy.
			Revised or Final English	DND Comments + 14	1S, 1H	ILSM	App. A3.11 (pg. 47)	14	Review or Acceptance		
			Draft Bilingual	Acceptance of Bilingual Operator Manual + 42	1S, 1H	ILSM		14	Review		
			Revised or Final Bilingual	DND Comments + 14	1S, 1H	ILSM		14	Review or Acceptance		
			See notes		1S, 1H	Issued to Students at the Training Session(s)					Hard copy of Student Handout only, and soft copy on CD of the Operator Training Package.
HELS-ILS-206	Preservation, Storage and Reactivation Instructions	Para. 4.3.1.6.1 (pg. 11)	Draft English	KO + 70	1S, 1H	ILSM	HELS-ILS-206	14	Review		Hard copy is the action copy.
			Revised or Final English	DND Comments + 14	1S, 1H	ILSM	App. A3.12 (pg. 49)	14	Review or Acceptance		
			Draft Bilingual	Acceptance of English Preservation, Storage and Reactivation Instructions + 28	1S, 1H	ILSM		14	Review		
			Revised or Final Bilingual	DND Comments + 14	1S, 1H	ILSM		14	Review or Acceptance		
HELS-ILS-207	Stowage, Shipping and Handling Instructions	Para. 4.3.1.7.1 (pg. 11)	Draft English	KO + 70	1S, 1H	ILSM	HELS-ILS-207	14	Review		Hard copy is the action copy.
			Revised or Final English	DND Comments + 14	1S, 1H	ILSM	App. A3.13 (pg. 51)	14	Review or Acceptance		

CDRL #	CDRL Title	SOW Para Ref	Version	Delivery Schedule	Qty	Addressee	DID # and Ref	DND Action Period	DND Action Required	Maint	Notes
			Draft Bilingual	Acceptance of English Stowage, Shipping and Handling Instructions + 28	1S, 1H	ILSM		14	Review		
			Revised or Final Bilingual	DND Comments + 14	1S, 1H	ILSM		14	Review or Acceptance		
HELS-ILS-208	Provisioning Parts Breakdown	Para. 4.4.3.1.1 (pg. 13)	Draft	KO + 49 / Same time as the draft Illustrated Parts Manual/Maintenance and Parts Handbook	1S	ILSM	HELS-ILS-208	14	Review		Soft copy is the action copy.
			Revised or Final	[DND Comments + 14 / Before the Initial Provisioning Conference]	1S	ILSM	App. A3.14 (pg. 53)	14	Review or Acceptance		
			Updates	If required after the IPC Meeting	1S	ILSM		14	Review or Acceptance		
HELS-ILS-209	Supplementary Provisioning Technical Documentation	Para. 4.4.3.2.1 (pg. 13)	Draft	Same time as the draft Provisioning Parts Breakdown	1S	ILSM	HELS-ILS-209	14	Review		Soft copy is the action copy.
			Revised	IPC Meeting	1S	ILSM	App. A3.15 (pg. 55)	14	Review		
			Revised or Final	DND Comments + 14	1S	ILSM		14	Review or Acceptance		
HELS-ILS-210	Special Tools & Test Equipment List	Para. 4.4.3.3.1 (pg. 14)	Draft	KO + 21	1S	ILSM	HELS-ILS-210	14	Review		Soft copy is the action copy.
			Revised or Final	DND Comments + 14	1S	ILSM	App. A3.16 (pg. 56)	14	Review or Acceptance		

CDRL #	CDRL Title	SOW Para Ref	Version	Delivery Schedule	Qty	Addressee	DID # and Ref	DND Action Period	DND Action Required	Maint	Notes
HELS-ILS-211	Materiel Identification Data Set	Para. 4.4.3.4.1 (pg. 14)	Draft	Same time as the draft Provisioning Parts Breakdown	1S	ILSM	HELS-ILS-211	21	Review		Soft copy is the action copy.
			Revised or Final	DND Comments + 14	1S	ILSM	App. A3.17 (pg. 58)	14	Review or Acceptance		
			Updates - For new items only	If Canada purchases additional serialized items (options or spares)	1S	ILSM		14	Review or Acceptance		
HELS-ILS-212	Identification Plates – Design Template & Populated Designs	Para. 4.5.1 (pg. 14)	Draft Design Template	KO + 28	1S, 1H	ILSM	HELS-ILS-212	14	Review		Hard copy is the action copy.
			Revised or Final Design Template	DND Comments + 14	1S, 1H	ILSM	App. A3.18 (pg. 59)	14	Review or Acceptance		
			Draft Populated Designs	Acceptance of Design Template + 28	1S, 1H	ILSM		14	Review		
			Revised or Final Populated Designs	DND Comments + 14	1S, 1H	ILSM		14	Review or Acceptance		
HELS-ILS-213	Controlled & Non-Controlled Goods List	Para. 4.6.1 (pg. 15)	Draft	Same time as the draft Provisioning Parts Breakdown	1S	ILSM	HELS-ILS-213	14	Review		Soft copy is the action copy.
			Revised or Final	DND Comments + 14	1S, 1H	ILSM	App. A3.19 (pg. 61)	14	Review or Acceptance		
HELS-ILS-214	Identification Labels for Storage & Shipment and Packaging Codes	Para. 4.7.3 (pg. 15)	Draft Labels	KO + 42 / IPC Meeting	1S	ILSM	HELS-ILS-214	28	Review		Soft copy is the action copy.

CDRL #	CDRL Title	SOW Para Ref	Version	Delivery Schedule	Qty	Addressee	DID # and Ref	DND Action Period	DND Action Required	Maint	Notes
			Revised or Final Labels	DND Comments + 14	1S	ILSM	App. A3.20 (pg. 63)	14	Review or Acceptance		
			Draft Codes	Provision of NSNs + 35	1S	ILSM		21	Review		
			Revised or Final Codes	DND Comments + 14	1S	ILSM		14	Review or Acceptance		
			Updates	If required after the a range of spares are chosen by DND	1S	ILSM		14	Review or Acceptance		
HELS-ILS-215	List of Items to be Supported	Para. 4.8.1 (pg. 15)	Draft	KO + 49	1S	ILSM	HELS-ILS-215	14	Review		Soft copy is the action copy.
			Revised or Final	DND Comments + 14	1S, 1H	ILSM	App. A3.21 (pg. 65)	14	Review or Acceptance		
HELS-ILS-216	Equipment Environmental Assessment	Para. 5.4.1 (pg. 18)	Draft	KO + 84	1S	TA	HELS-ILS-216	56	Review		
			Revised or Final	DND Comments + 28	1S	TA	App. 0 (pg. 69)	14	Review or Acceptance		

A3.0 APPENDIX: DATA ITEM DESCRIPTION

A3.1 Data Deliverable Format

A3.1.1 **Unless otherwise specified as a specific requirement, the Contractor must deliver all of the soft copies of data deliverables, in formats compatible with the office software currently in use by the DND as listed:**

A3.1.1.1 Microsoft (MS) Windows 10 Enterprise Operating System (OS);

A3.1.1.2 MS Edge 2019;

A3.1.1.3 MS Office Professional Plus 2013 (Word, Excel, Access, PowerPoint and Outlook); and

A3.1.1.4 Foxit PhantomPDF version 10;

A3.2 DID Table Definitions

The following section defines the various blocks of information found on the Data Item Description (DID) forms:

BLOCK 1 – TITLE
The title of the data item for the DID.

BLOCK 2 - IDENTIFICATION NUMBER
The Data Item Description (DID) number, consisting of a sequential three-digit number and prefixed with an abbreviation code, to uniquely identify the DID. Note that the 001-099 series is reserved to Project Management (PM) DIDs, the 101-199 series is reserved to Systems Engineering (SE) DIDs and the 201-299 series is reserved to Integrated Logistics Support (ILS) DIDs. The abbreviation codes used for the prefix are:

"PM" for Project Management
"SE" for Systems Engineering
"ILS" for Integrated Logistics Support

BLOCK 3 - DESCRIPTION
Provides a general description of the data content requirements.

BLOCK 4 – RELATED DOCUMENT(S)
Provides a listing of the related documents and specifications associated with and required to produce this DID.

BLOCK 5 - CONTRACT REFERENCE
The specific paragraph numbers from the Contract Statement of Work and CDRL to assist in identifying the work effort associated with the data item.

BLOCK 6 - PREPARATION INSTRUCTIONS
Provides the preparation instructions for the content and format requirements for the DID.

A3.3 DID – Contract Master Schedule

DATA ITEM DESCRIPTION	
1. TITLE **Contract Master Schedule (CMS)**	2. IDENTIFICATION NUMBER **DID HELS-PM-001**
3. DESCRIPTION The CMS describes the Contractor's planned sequence of activities, milestones and decision points to enable the objectives of the Contract to be met. Additionally, the CMS defines the current Contract schedule status, comparing the current schedule to the contracted schedule.	
4. RELATED DOCUMENTS	5. CONTRACT REFERENCE **SOW**: **Para. 3.2.1 (pg. 8)** **CDRL**: **App. A2.2 (pg. 26)**

6. PREPARATION INSTRUCTIONS

6.1. **CONTENT**

6.1.1. **Data to be Included**

6.1.1.1. The CMS must graphically depict the contract schedule and progress at the activity level.

6.1.1.2. The CMS must graphically present or otherwise identify:

6.1.1.2.1. activities and their estimated durations;

6.1.1.2.2. milestones, including milestones in the contract;

6.1.1.2.3. the relationships and dependencies between activities and milestones to be accomplished by or for the Contractor in the performance of its obligations under the contract;

6.1.1.2.4. critical and non-critical paths;

6.1.1.2.5. floats available on all activities and milestones;

6.1.1.2.6. allocated resources for each activity; and

6.1.1.2.7. notes on the use of the CMS, including a glossary of terms and symbols used.

6.1.1.3. The CMS must include:

6.1.1.3.1. Subcontractor schedules, to a level of detail that is consistent with the level of detail for the Contractor's own schedule;

6.1.1.3.2. other major events, as agreed between the Contractor and DND;

6.1.1.3.3. DND tasks, where such tasks interface with, and may affect, Contractor tasks;

6.2. **SOFT COPY FORMAT**

6.2.1. The CMS must be submitted as a PDF file type.

6.2.2. The CMS must be displayed in a variety of formats:

6.2.2.1. a Gantt chart;

6.2.2.2. a list of all tasks, together with their planned and actual start and completion dates; and

6.2.2.3. a listing of milestones (including Milestones in the contract), together with their original, rescheduled, forecast and actual completion dates.

6.2.3. **Soft Copy format submission size below 7MB** – The CMS PDF may be submitted via email as follows:

6.2.3.1. To Field: As per the related CDRL section 9.A. Addressee, as identified in the contract.

6.2.3.2. Subject Field: HELS-PM-001 – CMS – [Rev #] – [Date of Issue]

6.2.4. **Soft Copy format submission size at or above 7MB** - The CMS PDF must be submitted on CD or DVD media and be labelled as follows:

6.2.4.1. High Energy Laser System

6.2.4.2. CMS;

6.2.4.3. HELS-PM-001;

6.2.4.4. The Revision number, and

6.2.4.5. The date of issue.

A3.4 DID – Contract Status Report

DATA ITEM DESCRIPTION	
1. TITLE **Contract Status Report (CSR)**	2. IDENTIFICATION NUMBER **DID HELS-PM-002**
3. DESCRIPTION The Contract Status Report (CSR) is the principal statement and explanation of the status of the contract at the end of each reporting period, and will summarize the Contractor's progress and activities in relation to the Project milestones, schedule, and contract data deliverables.	
4. RELATED DOCUMENTS	5. CONTRACT REFERENCE **SOW**: **Para. 3.3.1 (pg. 8)** **CDRL**: **App. A2.2 (pg. 26)**

6. PREPARATION INSTRUCTIONS

6.1. **CONTENT**

6.1.1. The CSR must identify the date at which the CSR is valid, and the time period since the status date of the previous CSR (the ‘reporting period’).

6.1.2. The CSR must include the following information:

6.1.2.1. A summary of significant work activities (including those undertaken by major Subcontractors) undertaken during the reporting period;

6.1.2.2. A summary of significant work activities (including those undertaken by major Subcontractors) expected to be undertaken in the next reporting period.

6.1.2.3. A summary of progress (including progress by major Subcontractors) against the CMS.

6.1.2.4. A narrative detailing progress against milestones, expected date of completion of near milestones, problem areas and work-around plans where required;

6.1.2.5. A status report on contract data deliverable end items as called up in the CDRLs;

6.1.2.6. An Integrated Logistic Support (ILS) report, giving the status of ILS activity;

6.1.2.7. A list of correspondence that requires a response from the DND/PSPC, but for which no response has been received; and

6.1.2.8. A list of DND/PSPC correspondence to the Contractor for which a response is outstanding, and an estimate of the response date.

6.1.3. **Risk Register**

6.1.3.1. The CSR must include a Risk Register that reflects the current status of risk for the contract;

6.1.3.2. The Risk Register information provided must include:

6.1.3.2.1. Identification of each risk (sequence number, name and description);

6.1.3.2.2. Its likelihood and potential severity;

6.1.3.2.3. Who is assigned to manage the risk;

6.1.3.2.4. The planned risk response should the event occur; and

6.1.3.2.5. The risk mitigation (actions taken in advance to reduce probability/impact.

6.1.3.3. Once individual identified risks have been resolved, they can be removed from the active Risk Register.

6.2. **SOFT COPY FORMAT**

6.2.1. The CSR must be submitted as a PDF file type.

6.2.2. The CSR PDF must be submitted via email (submission size not to exceed 7MB) as follows:

6.2.2.1. To Field: As per the related CDRL section 9.A. Addressee, as identified in the contract.

6.2.2.2. Subject Field: HELS-PM-002 – CSR – [Rev #] – [Date of Issue]

A3.5 DID – Meeting Agenda

DATA ITEM DESCRIPTION	
1. TITLE **Meeting Agenda**	2. IDENTIFICATION NUMBER **DID HELS-PM-003**
3. DESCRIPTION The Meeting Agenda contains the venue information and identifies the discussion items to be covered at meetings.	
4. RELATED DOCUMENTS	5. CONTRACT REFERENCE **SOW**: **Para. 3.4.5.1.1 (pg. 9)** **CDRL**: **App. A2.2 (pg. 26)**

6. PREPARATION INSTRUCTIONS

6.1. **CONTENT**

6.1.1. The Meeting Agenda must set forth the venue, identify all requirements and list the discussion items to be covered at the meeting.

6.1.2. Venue. The Meeting Agenda must address the venue as follows:

6.1.2.1. Meeting Identification Number;

6.1.2.2. Purpose;

6.1.2.3. Date, time and location; and

6.1.2.4. Attendees.

6.1.3. Discussion items. The Meeting Agenda must address the discussion items through the following sections:

6.1.3.1. Opening Remarks;

6.1.3.2. Agenda Review;

6.1.3.3. Review of Previous Minutes;

6.1.3.4. Opened Discussion Items;

6.1.3.5. New Discussion Items;

6.1.3.6. Review of Action Items;

6.1.3.7. Next Venue; and

6.1.3.8. Closing Remarks.

6.2. **HARD COPY FORMAT**

6.2.1. The Meeting Agenda must be printed on paper with these characteristics:

6.2.1.1. Weight of no less than 90 gsm;

6.2.1.2. Brightness of no less than 96 ISO brightness;

6.3. **SOFT COPY FORMAT**

6.3.1. The Meeting Agenda must be submitted as a MS Word file type.

6.3.2. The Meeting Agenda MS Word document must be submitted via email (submission size not to exceed 7MB) as follows:

6.3.2.1. To Field: As per the related CDRL section 9.A. Addressee, as identified in the contract.

6.3.2.2. Subject Field: HELS-PM-003 – Meeting Agenda – [Rev #] – [Date of Issue]

A3.6 DID – Meeting Minutes

DATA ITEM DESCRIPTION	
1. TITLE **Meeting Minutes**	2. IDENTIFICATION NUMBER **DID HELS-PM-004**
3. DESCRIPTION The Meeting Minutes contains the detailed records of proceedings, discussions, decisions and action items from meetings.	
4. RELATED DOCUMENTS	5. CONTRACT REFERENCE **SOW**: **Para. 3.4.5.1.2 (pg. 9)** **CDRL**: **App. A2.2 (pg. 26)**

6. PREPARATION INSTRUCTIONS

6.1. **CONTENT**

6.1.1. The Meeting Minutes must contain the detailed records of proceedings, discussions, decisions and action items from the meeting and be presented through the following sections:

6.1.1.1. General – consisting of meeting identification number, purpose, date, time and location;

6.1.1.2. Attendees, consisting of the organization each person represents, and the identification of the Chairperson(s);

6.1.1.3. Opening Remarks;

6.1.1.4. **Action Item Report** - used to monitor issues, assign responsibility, direct action and track status, history, and progress, and must consisting of:

6.1.1.4.1. Item #; date initiated; required action; assigned actionee; target completion date; cross-reference to all related action items.

6.1.1.4.2. Action Item Report must be **updated** with each meeting and must consisting of:

6.1.1.4.2.1. Action Item current status and the actual date completed;

6.1.1.5. Next Venue;

6.1.1.6. Closing Remarks;

6.2. **SOFT COPY FORMAT**

6.2.1. The Meeting Minutes must be submitted as a PDF file type.

6.2.2. The Meeting Minutes PDF must be submitted via email (submission size not to exceed 7MB) as follows:

6.2.2.1. To Field: As per the related CDRL section 9.A. Addressee, as identified in the contract.

6.2.2.2. Subject Field: HELS-PM-004 – Meeting Minutes – [Rev #] – [Date of Issue]

A3.7 DID – Operator Manual

DATA ITEM DESCRIPTION	
1. TITLE **Operator Manual**	2. IDENTIFICATION NUMBER **DID HELS-ILS-201**
3. DESCRIPTION The Operator Manual contains all the essential information required to describe the safe and correct operative procedures and operator maintenance associated with the equipment.	
4. RELATED DOCUMENTS **C-01-100-100/AG-008** *Writer's Guide for Technical Documentation*	5. CONTRACT REFERENCE **SOW**: **Para. 4.3.1.1.1 (pg. 10)** **CDRL: App. A2.2 (pg. 26)**

6 PREPARATION INSTRUCTIONS

6.1 **CONTENT**

6.1.1 The Operator Manual must cover the following topics, and others judged pertinent by the Contractor:

6.1.1.1 General Description/Equipment Overview;

6.1.1.2 Pre-use testing/inspection;

6.1.1.3 Preparation and set up for use;

6.1.1.4 Use and operation, including operation under emergency, adverse, or abnormal conditions, when applicable;

6.1.1.5 Operator Maintenance, IAW the Maintenance Concept para 4.1 (pg. 10);

6.1.1.6 Shut-down and post-shut-down actions and precautions;

6.1.1.7 Preparation for equipment transit by air, land, and sea;

6.1.1.8 Safety/Hazardous material issues;

6.1.2 The Operator Manual material covered in 6.1.1 above, must be amplified by colour illustrations, line drawings, and good quality colour pictures.

6.2 **GENERAL FORMAT**

6.2.1 The Operator Manual must be prepared in the Contractor's format while being in full conformance with the above-stated issue of C-01-100-100/AG-008.

6.2.2 The Operator Manual must include the National Defence Index of Documentation (NDID) number (provided to the Contractor by DND) that must be placed on the top right corner of all the pages of the manual.

6.3 **HARD COPY FORMAT**

6.3.1 The accepted Operator Manual hard copies must be:

6.3.1.1 Printed on paper with these characteristics:

6.3.1.1.1 Standard US Letter Size (270 mm x 216 mm)

6.3.1.1.2 Covers: 290-370 g/m^2 polyester film (such as Pico Film), matt surface and white colour

6.3.1.1.3 Pages: 120-170 g/m^2 polyester film (such as Pico Film), matt surface and white colour

6.3.1.2 Bound with white or black spiral coil (PLASTIKOIL®)

6.4 **SOFT COPY FORMAT**

6.4.1 The Operator Manual must be provided as a PDF file with searchable text that matches the printed publication's format and layout. Links, bookmarks and thumbnails are to be included in the PDF file. All references made to a specific paragraph, figure, appendix must be appropriately linked.

6.4.2 Viewing the Operator Manual PDF: pages, regardless of size, containing text and illustrations in landscape, must be rotated for electronic viewing and reading in landscape.

6.4.3 **Soft Copy format submission size below 7MB** – The Operator Manual PDF and its native file may be submitted via email as follows:

6.4.3.1 To Field: As per the related CDRL section 9.A. Addressee, as identified in the contract.

6.4.3.2 Subject Field: HELS-ILS-201 – Operator Manual – [Rev #] – [Date of Issue]

6.4.4 **Soft Copy format submission size at or above 7MB** - The Operator Manual PDF and its native file must be submitted on CD or DVD media and be labelled as follows:

6.4.4.1 High Energy Laser System

6.4.4.2 Operator Manual;

6.4.4.3 HELS-ILS-201;

6.4.4.4 The Revision number, and

6.4.4.5 The date of issue.

A3.8 DID – Repair Manual

DATA ITEM DESCRIPTION	
1. TITLE **Repair Manual**	2. IDENTIFICATION NUMBER **DID HELS-ILS-202**
3. DESCRIPTION The Repair Manual contains all the information required by the Technician to perform preventative and corrective maintenance procedures and troubleshooting of the equipment.	
4. RELATED DOCUMENTS **D-01-100-204/SF-000** *Preparation of Preventive Maintenance Instructions* **D-01-100-205/SF-000** *Preparation of Corrective Maintenance Instructions* **C-01-100-100/AG-008** *Writer's Guide for Technical Documentation*	5. CONTRACT REFERENCE **SOW**: **Para. 4.3.1.2.1 (pg. 10)** **CDRL**: **App. A2.2 (pg. 26)**

6. PREPARATION INSTRUCTIONS

6.1. **CONTENT**

6.1.1. The Repair Manual must provide descriptive essential, preventive and corrective maintenance information on all components, groups of equipment and systems IAW the Maintenance Concept, Para. 4.1 (pg. 10).

6.1.2. The Repair Manual text must be amplified by comprehensive system or component illustration, good quality colour pictures, pictograms and schematics.

6.2. **GENERAL FORMAT**

6.2.1. The Repair Manual must be prepared in the Contractor's format and be in full conformance with the current issue of C-01-100-100/AG-008, D-01-100-204/SF-000 and D-01-100-205/SF-000.

6.2.2. The Repair Manual must include the National Defence Index of Documentation (NDID) number (provided to the Contractor by DND) that must be placed on the right top corner of all the pages of the manual.

6.2.3. The Repair Manual should use illustrations, good quality colour pictures and pictograms as much as possible.

6.3. **HARD COPY FORMAT**

6.3.1. The accepted Repair Manual hard copies must be:

6.3.1.1. Printed on paper with these characteristics:

6.3.1.1.1. Standard US Letter Size (216 mm x 270 mm)

6.3.1.1.2. Covers: 290-370 g/m^2 polyester film (such as Pico Film), matt surface and white colour

6.3.1.1.3. Pages: 120-170 g/m^2 polyester film (such as Pico Film), matt surface and white colour

6.3.1.2. Bound with white or black spiral PVC coil (such as PLASTIKOIL®)

6.4. **SOFT COPY FORMAT**

6.4.1. The Repair Manual soft copy format must meet the following:

6.4.1.1. Be a PDF file that matches the printed publication's format and layout. Links, bookmarks, and thumbnails are to be included in the PDF file.

6.4.1.2. All references made to a specific paragraph, figure, appendix must be appropriately linked.

6.4.1.3. Viewing the PDF: pages, regardless of size, containing text and illustrations in landscape, must be rotated for electronic viewing and reading in landscape.

6.4.2. **Soft Copy format submission size below 7MB** – The Repair Manual PDF and its native file may be submitted via email as follows:

6.4.2.1. To Field: As per the related CDRL section 9.A. Addressee, as identified in the contract.

6.4.2.2. Subject Field: HELS-ILS-202 – Repair Manual – [Rev #] – [Date of Issue]

6.4.3. **Soft Copy format submission size at or above 7MB** - The Repair Manual PDF and its native file must be submitted on CD or DVD media and be labelled as follows:

6.4.3.1. High Energy Laser System

6.4.3.2. Repair Manual;

6.4.3.3. HELS-ILS-202;

6.4.3.4. The Revision number, and

6.4.3.5. The date of issue.

A3.9 DID – Installation Instructions

DATA ITEM DESCRIPTION	
1. TITLE **Installation Instructions**	2. IDENTIFICATION NUMBER **DID HELS-ILS-203**
3. DESCRIPTION The Installation Instructions provides guidance on the installation, checkout, and removal of a specified systems, sub-systems, and components.	
4. RELATED DOCUMENTS **C-01-100-100/AG-008** *Writer's Guide for Technical Documentation*	5. CONTRACT REFERENCE **SOW**: **Para. 4.3.1.3.1 (pg. 10)** **CDRL**: **App. A2.2 (pg. 26)**

6. PREPARATION INSTRUCTIONS

6.1. **CONTENT**

6.1.1. The Installation Instructions must cover the following topics:

6.1.1.1. **Part 1 – Introduction** – explains the purpose and scope of the Installation Instructions and states the name and model of the equipment to which it applies. Illustrations, as required, to be included.

6.1.1.2. **Part 2 – Description** – describes the equipment as a whole and the system(s) of which it is composed. Illustrations showing external views of the equipment must be used to show general features.

6.1.1.3. **Part 3 – Installation Instructions** – details the step-by-step procedures for installing the equipment. Special tools and other equipment required for installation must be noted. Illustrations must be supplied to ensure correct installation.

6.1.1.4. **Part 4 – Checkout Procedures** – details the step-by-step procedures required to ensure that the equipment has been correctly installed and is operational. Special tools, test equipment, and other equipment required must be described.

6.1.1.5. **Part 5 – Removal Instructions** – details the step-by-step procedures required to remove the equipment and restore the basic equipment to its original condition. Illustrations must be supplied to ensure correct removal.

6.2. **GENERAL FORMAT**

6.2.1. The Installation Instructions must be prepared in the Contractor's format while being in full conformance with the above-stated issue of C-01-100-100/AG-008.

6.2.2. The Installation Instructions must include the National Defence Index of Documentation (NDID) number (provided to the Contractor by DND) that must be placed on the top right corner of all the pages of the manual.

6.3. **HARD COPY FORMAT**

6.3.1. The accepted Installation Instructions hard copies must be:

6.3.1.1. Printed on paper with these characteristics:

6.3.1.1.1. Standard US Letter Size (270 mm x 216 mm)

6.3.1.1.2. Covers: 290-370 g/m^2 polyester film (such as Pico Film), matt surface and white colour

6.3.1.1.3. Pages: 120-170 g/m^2 polyester film (such as Pico Film), matt surface and white colour

6.3.1.2. Bound with white or black spiral coil (PLASTIKOIL®)

6.4. **SOFT COPY FORMAT**

6.4.1. The Installation Instructions must be provided as a PDF file with searchable text that matches the printed publication's format and layout.

6.4.1.1. Links, bookmarks and thumbnails are to be included in the PDF file.

6.4.1.2. All references made to a specific paragraph, figure, appendix must be appropriately linked.

6.4.1.3. Viewing the Installation Instructions PDF: pages, regardless of size, containing text and illustrations in landscape, must be rotated for electronic viewing and reading in landscape.

6.4.2. **Soft Copy format submission size below 7MB** – The Installation Instructions may be submitted via email as follows:

6.4.2.1. To Field: As per the related CDRL section 9.A. Addressee, as identified in the contract.

6.4.2.2. Subject Field: HELS-ILS-203 – Installation Instructions – [Rev #] – [Date of Issue]

6.4.3. **Soft Copy format submission size at or above 7MB** – The Installation Instructions file must be submitted on CD or DVD media and be labelled as follows:

6.4.3.1. High Energy Laser System

6.4.3.2. Installation Instructions

6.4.3.3. HELS-ILS-203;

6.4.3.4. The Revision number, and

6.4.3.5. The date of issue.

A3.10 **DID – Illustrated Parts Manual**

DATA ITEM DESCRIPTION	
1. TITLE **Illustrated Parts Manual**	2. IDENTIFICATION NUMBER **DID HELS-ILS-204**
3. DESCRIPTION The Illustrated Parts Manual contains all the necessary information to positively identify all parts of the equipment.	
4. RELATED DOCUMENTS **D-01-100-207/SF-002** *Preparation of Interim Illustrated Parts Manuals for Land Equipment***.**	5. CONTRACT REFERENCE **SOW**: **Para. 4.3.1.4.1 (pg. 11)** **CDRL**: **App. A2.2 (pg. 26)**

6 PREPARATION INSTRUCTIONS

6.1 **CONTENT**

6.1.1 The Illustrated Parts Manual content must be IAW D-01-100-207/SF-002, and the drawings must be sequenced as per the PPB breakdown of assemblies, and a major assembly must be fully broken down before the next major assembly is shown. Diagram below assumes that C3 and all D levels do not require a breakdown.

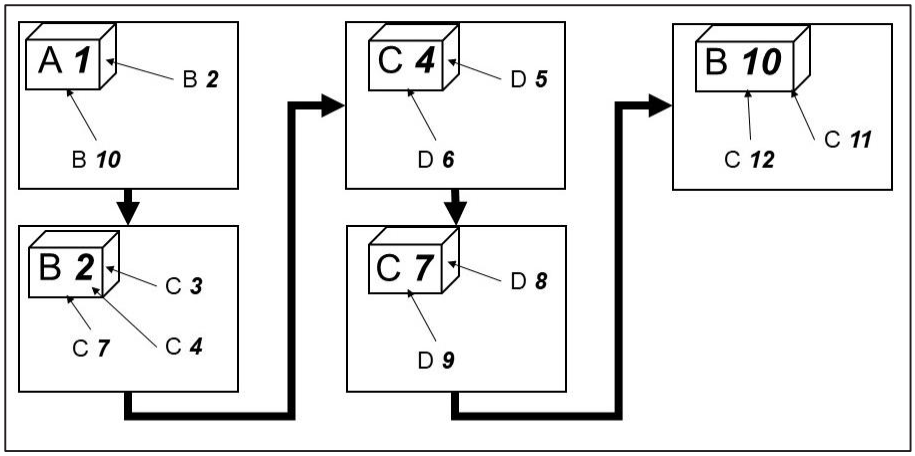

6.1.2 The Illustrated Parts Manual must contain illustrations, exploded views, and drawings and associated lists necessary for the proper identification of all parts, assemblies, and special equipment to the lowest replaceable unit IAW the Maintenance Concept para. 4.1 (pg. 10).

6.1.3 The exploded views contained in the Illustrated Parts Manual must amplify the relationship between all parts and assemblies to facilitate repair of the equipment and the replacement of parts and assemblies down to the lowest replaceable unit.

6.1.4 The Illustrated Parts Manual must include the National Defence Index of Documentation (NDID) number (provided to the Contractor by DND) that must be placed on the top right corner of each page of the manual.

6.2 **GENERAL FORMAT**

6.2.1 The format of the Illustrated Parts Manual must be IAW D-01-100-207/SF-002, with the exception that “NCAGE” must be used instead of “NSCM”.

6.2.2 The Illustrated Parts Manual must **not** use photographs as illustrations.

6.3 **HARD COPY FORMAT**

6.3.1 The accepted Illustrated Parts Manual hard copies must be:

6.3.1.1 Printed on paper with these characteristics:

6.3.1.1.1 Standard US Letter Size (216 mm x 270 mm)

6.3.1.1.2 Covers: 290-370 g/m^2 polyester film (such as Pico Film), matt surface and white colour

6.3.1.1.3 Pages: 120-170 g/m^2 polyester film (such as Pico Film), matt surface and white colour

6.3.1.2 Bound with white or black spiral PVC coil (such as PLASTIKOIL®)

6.4 **SOFT COPY FORMAT**

6.4.1 The Illustrated Parts Manual soft copy format must be PDF, with searchable text, with pages rotated as needed for normal viewing on screen.

6.4.2 **Soft Copy format submission size below 7MB** – The Illustrated Parts Manual PDF may be submitted via email as follows:

6.4.2.1 To Field: As per the related CDRL section 9.A. Addressee, as identified in the contract.

6.4.2.2 Subject Field: HELS-ILS-204 – Illustrated Parts Manual – [Rev #] – [Date of Issue]

6.4.3 **Soft Copy format submission size at or above 7MB** - The Illustrated Parts Manual PDF and its native file must be submitted on CD or DVD media and be labelled as follows:

6.4.3.1 High Energy Laser System

6.4.3.2 Illustrated Parts Manual;

6.4.3.3 HELS-ILS-204;

6.4.3.4 The Revision number, and

6.4.3.5 The date of issue.

A3.11 **DID – Operator Training Package**

DATA ITEM DESCRIPTION	
1. TITLE **Operator Training Package**	2. IDENTIFICATION NUMBER **DID HELS-ILS-205**
3. DESCRIPTION The Operator Training Package will be used as the reference material during the Training Sessions, and to facilitate future lesson plan preparation on the operation, Operator maintenance and storage of the equipment.	
4. RELATED DOCUMENTS **C-01-100-100/AG-008** *Writer's Guide for Technical Documentation*	5. CONTRACT REFERENCE **SOW**: **Para. 4.3.1.5.1 (pg. 11)** **CDRL**: **App. A2.2 (pg. 26)**

6. PREPARATION INSTRUCTIONS

6.1. **CONTENT**

6.1.1. The Operator Training Package course material must include, in the order judged most appropriate by the Contractor, the following subjects:

6.1.1.1. General Description/Equipment Overview;

6.1.1.2. Pre-use testing/inspection;

6.1.1.3. Preparation and set up for use;

6.1.1.4. Use and operation, including operation under emergency, adverse, or abnormal conditions, when applicable;

6.1.1.5. Preparation for travel and handling;

6.1.1.6. Storage, preservation, exercising, and reactivation procedures;

6.1.1.7. Safety and Hazardous material issues;

6.1.1.8. Operator Troubleshooting and testing;

6.1.1.9. Basic diagnosis and fault finding; and,

6.1.1.10. Operator Maintenance IAW the Maintenance Concept para. 4.1 (pg. 10).

6.1.2. The Operator Training Package course material must be amplified by colour illustrations, line drawings, and good quality colour pictures.

6.1.3. The Operator Training Package course material subjects must be approached from the perspective of an experienced RWS operator, but with no experience using HELs.

6.1.4. The Operator Training Package course material must not present any information that cannot also be found in the Technical Publication Package documents; those documents remain the primary reference for the equipment.

6.1.5. The Operator Training Package must include a **Student Handout** that includes the course material described above.

6.1.6. The Operator Training Package must include an **Instructor Lesson Plan** that includes the course material described above, speaker's notes, and outlines the following:

6.1.6.1. Classroom's physical and functional requirements;

6.1.6.2. Field area's physical and functional requirements;

6.1.6.3. Training Session schedule, divided by course material subjects;

6.1.6.4. Instructor/Student ratio for the course material subjects;

6.1.6.5. Training materiel to be supplied by the Contractor;

6.1.6.6. Training material to be supplied by Canada.

6.2. **GENERAL FORMAT**

6.2.1. The Operator Training Package can be prepared in the Contractor's format while using C-01-100-100/AG-008 as guidance.

6.2.2. No Contractor or sub-contractor logo, name, trademark, or other wording or device that may be interpreted as advertising must appear in the publication.

6.2.3. The Operator Training Package **Student Handout** must have no more than three (3) slides per page of the course material, and have additional space and lines for note taking.

6.2.4. The Operator Training Package **Instructor Lesson Plan** must have one (1) slide per page of the course material, with the speaker's notes below it.

6.3. **HARD COPY FORMAT**

6.3.1. The Operator Training Package must be furnished in a three (3) ring binder(s) and printed on paper with these characteristics:

6.3.1.1. Weight of no less than 90 g/m^2;

6.3.1.2. Brightness of no less than 96 ISO brightness;

6.4. **SOFT COPY FORMAT**

6.4.1. The Operator Training Package soft copy format must be MS PowerPoint.

6.4.2. **Soft Copy format submission size below 7MB** – The Operator Training Package may be submitted via email as follows:

6.4.2.1. To Field: As per the related CDRL section 9.A. Addressee, as identified in the contract.

6.4.2.2. Subject Field: HELS-ILS-205 – Operator Training Package – [Rev #] – [Date of Issue]

6.4.3. **Soft Copy format submission size at or above 7MB** - The Operator Training Package file must be submitted on CD or DVD media and be labelled as follows:

6.4.3.1. High Energy Laser System

6.4.3.2. Operator Training Package;

6.4.3.3. HELS-ILS-205;

6.4.3.4. The Revision number, and

6.4.3.5. The date of issue.

A3.12 **DID – Preservation, Storage and Reactivation Instructions**

DATA ITEM DESCRIPTION	
1. TITLE **Preservation, Storage and Reactivation Instructions**	2. IDENTIFICATION NUMBER **DID HELS-ILS-206**
3. DESCRIPTION The Preservation, Storage and Reactivation Instructions (PSRI) provides guidance for the storage and preservation, in-storage inspections, exercising, and reactivation of equipment.	
4. RELATED DOCUMENTS **D-01-100-211/SF-000** *Preservation, Storage and Handling Instructions* **C-01-100-100/AG-008** *Writer's Guide for Technical Documentation*	5. CONTRACT REFERENCE **SOW**: **Para. 4.3.1.6.1 (pg. 11)** **CDRL**: **App. A2.2 (pg. 26)**

6. PREPARATION INSTRUCTIONS

6.1. **CONTENT**

6.1.1. The PSRI must contain the necessary data as outlined in D-01-100-211/SF-000, *Preservation, Storage and Handling Instructions,* **omitting** Annex A Part 4 – Handling and Shipping.

6.2. **GENERAL FORMAT**

6.2.1. The PSRI must be prepared in the Contractor's format while being in full conformance with the above-stated issue of C-01-100-100/AG-008.

6.2.2. The PSRI must have the National Defence Index of Documentation (NDID) number, provided to the Contractor by DND, on the top right corner of all the pages.

6.3. **HARD COPY FORMAT**

6.3.1. The accepted PSRI hard copies must be:

6.3.1.1. Printed on paper with these characteristics:

6.3.1.1.1. Standard US Letter Size (216 mm x 270 mm)

6.3.1.1.2. Covers: 290-370 g/m^2 polyester film (such as Pico Film), matt surface and white colour

6.3.1.1.3. Pages: 120-170 g/m^2 polyester film (such as Pico Film), matt surface and white colour

6.3.1.2. Bound with white or black spiral PVC coil (such as PLASTIKOIL®)

6.4. **SOFT COPY FORMAT**

6.4.1. The PSRI must be provided as a PDF file with searchable text that matches the printed publication's format and layout. Links, bookmarks and thumbnails are to be included in the PDF file. All references made to a specific paragraph, figure, appendix must be appropriately linked.

6.4.2. Viewing the PDF version: pages, regardless of size, containing text and illustrations in landscape, must be rotated for electronic viewing and reading in landscape.

6.4.3. **Soft Copy format submission size below 7MB** – The PRSI PDF and its native file may be submitted via email as follows:

6.4.3.1. To Field: As per the related CDRL section 9.A. Addressee, as identified in the contract.

6.4.3.2. Subject Field: HELS-ILS-206 – PRSI – [Rev #] – [Date of Issue]

6.4.4. **Soft Copy format submission size at or above 7MB** - The PRSI PDF and its native file must be submitted on CD or DVD media and be labelled as follows:

6.4.4.1. High Energy Laser System

6.4.4.2. PRSI;

6.4.4.3. HELS-ILS-206;

6.4.4.4. The Revision number, and

6.4.4.5. The date of issue.

A3.13 **DID – Stowage, Shipping, and Handling Instructions**

DATA ITEM DESCRIPTION	
1. TITLE **Stowage, Shipping, and Handling Instructions**	2. IDENTIFICATION NUMBER **DID HELS-ILS-207**
3. DESCRIPTION The Stowage, Shipping, and Handling Instructions (SSHI) manual provides guidance for the safe stowage, shipping and handling of the equipment.	
4. RELATED DOCUMENTS **D-01-100-211/SF-000** *Preservation, Storage and Handling Instructions* **C-01-100-100/AG-008** *Writer's Guide for Technical Documentation*	5. CONTRACT REFERENCE **SOW**: **Para. 4.3.1.7.1 (pg. 11)** **CDRL**: **App. A2.2 (pg. 26)**

6. PREPARATION INSTRUCTIONS

6.1. **CONTENT**

6.1.1. The SSHI must contain the necessary data as outlined in Annex A Part 4 – *Handling and Shipping* of D-01-100-211/SF-000 for:

6.1.1.1. All standard means of conveyance:

6.1.1.1.1. Stowed in wheeled vehicles;

6.1.1.1.2. Rail transport;

6.1.1.1.3. Maritime transport; and,

6.1.1.1.4. Air Transport.

6.1.1.2. All appropriate standard means of handling.

6.1.2. Data common to all means of conveyance and handling need not be repeated and can be grouped in a general section.

6.2. **GENERAL FORMAT**

6.2.1. The SSHI must be prepared in the Contractor's format while being in full conformance with the above-stated issue of C-01-100-100/AG-008.

6.2.2. The SSHI must have the National Defence Index of Documentation (NDID) number, provided to the Contractor by DND, on the top right corner of all the pages.

6.3. **HARD COPY FORMAT**

6.3.1. The accepted SSHI hard copies must be:

6.3.1.1. Printed on paper with these characteristics:

6.3.1.1.1. Standard US Letter Size (216 mm x 270 mm)

6.3.1.1.2. Covers: 290-370 g/m^2 polyester film (such as Pico Film), matt surface and white colour

6.3.1.1.3. Pages: 120-170 g/m^2 polyester film (such as Pico Film), matt surface and white colour

6.3.1.2. Bound with white or black spiral PVC coil (such as PLASTIKOIL®)

6.4. **SOFT COPY FORMAT**

6.4.1. The SSHI must be provided as a PDF file with searchable text that matches the printed publication's format and layout. Links, bookmarks and thumbnails are to be included in the PDF file. All references made to a specific paragraph, figure, appendix must be appropriately linked.

6.4.2. Viewing the PDF version: pages, regardless of size, containing text and illustrations in landscape, must be rotated for electronic viewing and reading in landscape.

6.4.3. **Soft Copy format submission size below 7MB** – The SSHI PDF and its native file may be submitted via email as follows:

6.4.3.1. To Field: As per the related CDRL section 9.A. Addressee, as identified in the contract.

6.4.3.2. Subject Field: HELS-ILS-207 – SSHI – [Rev #] – [Date of Issue]

6.4.4. **Soft Copy format submission size at or above 7MB** - The SSHI PDF and its native file must be submitted on CD or DVD media and be labelled as follows:

6.4.4.1. High Energy Laser System

6.4.4.2. SSHI;

6.4.4.3. HELS-ILS-207;

6.4.4.4. The Revision number, and

6.4.4.5. The date of issue.

A3.14 DID – Provisioning Parts Breakdown

DATA ITEM DESCRIPTION	
1. TITLE **Provisioning Parts Breakdown**	2. IDENTIFICATION NUMBER **DID HELS-ILS-208**
3. DESCRIPTION The Provisioning Parts Breakdown (PPB) is a top-down breakdown of the equipment in the configuration in which it is being procured.	
4. RELATED DOCUMENTS **D-01-100-214/SF-000** *Specification for Preparation of Provisioning Documentation for Canadian Forces Equipment*	5. CONTRACT REFERENCE **SOW**: **Para. 4.4.3.1.1 (pg. 13)** **CDRL**: **App. A2.2 (pg. 26)**

6 PREPARATION INSTRUCTIONS

6.1 **CONTENT**

6.1.1 The PPB must be prepared IAW in D-01-100-214/SF-000, with modifications listed below.

6.1.2 The following data fields must be added to the PPB:

6.1.2.1 *Quantity per End Item (QPEI):* Between Fields number 9 and 10, refers to the total number of times the item is used in the whole prime equipment (A-level). This field may contain whatever number of numeric characters needed to show the quantities.

6.1.2.2 *SPTD filename:* As the last Field, must contain the line item's applicable SPTD filename. This field may be whatever size adequate to fully show the data therein.

6.1.3 Common fasteners and hardware (items with "Y" indention code) must have an Item Name that describes their key characteristics so that equivalents can be identified from alternate sources, as possible within the mandated field size. Example: "Hex Head Screw M8 x 1.25mm, 30mm Lg, 18-8 SS".

6.1.4 For clarity:

6.1.4.1 *Original Equipment Manufacturer's Part Number* refers only to the Contractor which DND has contracted to supply the equipment; data from sub-contractors for items that they did not manufacture or do not control are not permitted. This field may be left blank if no data is available, or if it is the same as the Manufacturer's Reference Number (MRN).

6.1.4.2 *Quantity per Assembly* (QPA) refers to the number of times the item is used in the next higher assembly. For example, a C-level item's QPA will show the number of times it is used in its related B-level assembly, without being multiplied by the number of B-level assemblies.

6.1.4.3 *NATO Commercial and Government Entity* (NCAGE) Codes can be searched and requested through the NATO portal: https://eportal.nspa.nato.int/AC135Public/scage/CageList.aspx.

6.1.5 The Source Maintenance and Recoverability (SMR) Codes are used to communicate maintenance and supply instructions to the various logistic support levels and user organizations for the logistic support of systems, equipment, and end items. The PPB SMR Codes must be chosen from the following list:

SMR Field Position	Code	Application/Explanation
First and Second Position Source Codes	PA	Item procured and stocked for anticipated or known usage. Items are normally considered for replenishment
	PC	Item procured and stocked, but is deteriorative in nature.
	PF	Support equipment which will not be stocked, but which will be centrally procured on demand.
	XA	Item is not procured or stocked because the requirements for the item will result in the replacement of the next higher assembly

	XC	Installation drawing, diagram, instruction sheet, or field Service drawing, that is identified by the manufacturers' part number.
Third Position Maintenance Codes	C	Support item is removed, replaced, used by the operator/crew.
	O	Support item is removed, replaced, or used at the Technician Maintenance level.
	K	Repairable item. Item is removed, replaced, or used at contractor facility.
Fourth Position Repair Codes	C	The lowest maintenance activity capable of complete repair of the support item is the operator/crew.
	O	The lowest maintenance activity capable of complete repair of the support item is the Technician Maintenance level.
	K	Repairable support item. Complete repair capability exists at a designated contractor facility.
	Z	Non-repairable.
Fifth Position Recoverability Codes	C	Repairable item. When uneconomically repairable, condemn and disposed by the operator/crew.
	Z	Non-repairable item. When item becomes unserviceable, condemn and disposed of by authorized activity.
	O	Repairable item. When uneconomically repairable, condemn and dispose at organizational activity.
	K	Repairable item. Condemnation and disposal to be performed at contractor facility.

6.2 **GENERAL FORMAT**

6.2.1 The PPB must be prepared as an MS Excel spreadsheet, formatted IAW D-01-100-214/SF-000, taking into account the modifications listed in para 6.1.2 above.

6.3 **SOFT COPY FORMAT**

6.3.1 **Soft Copy format submission size below 7MB** – The PPB may be submitted via email as follows:

6.3.1.1 To Field: As per the related CDRL section 9.A. Addressee, as identified in the contract.

6.3.1.2 Subject Field: HELS-ILS-208 – PPB – [Rev #] – [Date of Issue]

6.3.2 **Soft Copy format submission size at or above 7MB** - The PPB file must be submitted on CD or DVD media and be labelled as follows:

6.3.2.1 High Energy Laser System

6.3.2.2 Provisioning Parts Breakdown;

6.3.2.3 HELS-ILS-208;

6.3.2.4 The Revision number, and

6.3.2.5 The date of issue.

A3.15 **DID – Supplementary Provisioning Technical Documentation**

DATA ITEM DESCRIPTION	
1. TITLE **Supplementary Provisioning Technical Documentation**	2. IDENTIFICATION NUMBER **DID HELS-ILS-209**
3. DESCRIPTION The Supplementary Provisioning Technical Documentation (SPTD) fully identifies and describes part(s) that may be catalogued.	
4. RELATED DOCUMENTS **D-01-100-214/SF-000** *Specification for Preparation of Provisioning Documentation for Canadian Forces Equipment*	5. CONTRACT REFERENCE **SOW**: **Para. 4.4.3.2.1 (pg. 13)** **CDRL**: **App. A2.2 (pg. 26)**

6. **PREPARATION INSTRUCTIONS**

6.1. **CONTENT**

6.1.1. The Supplementary Provisioning Technical Documentation (SPTD) must be provided for each item appearing on the Provisioning Documentation, IAW D-01-100-214/SF-000.

6.1.2. The SPTD must include the technical data required for DND to classify and fully describe the item within the NATO codification system, allowing for item identification and cataloguing purposes.

6.2. **SOFT COPY FORMAT**

6.2.1. The SPTD must be submitted with filenames in the following format: (MRN)_(NCAGE)_(item name).(software extension).

6.2.2. **Soft Copy format submission size below 7MB** – The SPTD may be submitted via email as follows:

6.2.2.1. To Field: As per the related CDRL section 9.A. Addressee, as identified in the contract.

6.2.2.2. Subject Field: HELS-ILS-209 – SPTD – [Rev #] – [Date of Issue]

6.2.3. **Soft Copy format submission size at or above 7MB** – The SPTD must be submitted on CD or DVD media and be labelled as follows:

6.2.3.1. High Energy Laser System

6.2.3.2. SPTD;

6.2.3.3. HELS-ILS-209;

6.2.3.4. The Revision number, and

6.2.3.5. The date of issue.

A3.16 DID – Special Tools & Test Equipment List

DATA ITEM DESCRIPTION	
1. TITLE **Special Tools & Test Equipment List**	2. IDENTIFICATION NUMBER **DID HELS-ILS-210**
3. DESCRIPTION The Special Tools & Test Equipment (STTE) List provides a list of all Special Tools & Test Equipment that are not in the DND inventory, required to maintain and operate the equipment.	
4. RELATED DOCUMENTS	5. CONTRACT REFERENCE **SOW**: **Para. 4.4.3.3.1 (pg. 14)** **CDRL**: **App. A2.2 (pg. 26)**

6. PREPARATION INSTRUCTIONS

6.1. **CONTENT**

6.1.1. The STTE List must include the following for each item listed:

6.1.1.1. Item Name;

6.1.1.2. Reference (Manufacturer's Part) Number;

6.1.1.3. NCAGE;

6.1.1.4. NSN (if available) or SPTD of item (if NSN is not available);

6.1.1.5. Maintenance Level;

6.1.1.6. Recommended Buy Quantity;

6.1.1.7. Standard Unit Price;

6.1.1.8. Date of First Article Delivery;

6.1.1.9. Picture(s) or Drawing(s) of item; and,

6.1.1.10. Description and Function of STTE

6.1.2. The STTE List may be divided into sub-sections such as:

6.1.2.1. Operations Support Equipment;

6.1.2.2. Maintenance Support Equipment;

6.1.2.3. Calibration Equipment;

6.1.2.4. Test, Measurement and Diagnostic Equipment:

6.1.2.5. Automatic Test Equipment and its Test Program Set; and

6.1.2.6. Computer Resource Support Requirement.

6.2. **GENERAL FORMAT**

6.2.1. The STTE List must be prepared as an MS Excel spreadsheet

6.3. **SOFT COPY FORMAT**

6.3.1. The STTE List must be provided as an MS Excel Spreadsheet file.

6.3.2. **Soft Copy format submission size below 7MB** – The STTE List may be submitted via email as follows:

6.3.2.1. To Field: As per the related CDRL section 9.A. Addressee, as identified in the contract.

6.3.2.2. Subject Field: HELS-ILS-210 – STTE List – [Rev #] – [Date of Issue]

6.3.3. **Soft Copy format submission size at or above 7MB** – The STTE List file must be submitted on CD or DVD media and be labelled as follows:

6.3.3.1. High Energy Laser System

6.3.3.2. Special Tools & Test Equipment List

6.3.3.3. HELS-ILS-210;

6.3.3.4. The Revision number, and

6.3.3.5. The date of issue.

A3.17 **DID – Material Identification Data Set**

DATA ITEM DESCRIPTION	
1. TITLE **Material Identification Data Set**	2. IDENTIFICATION NUMBER **DID HELS-ILS-211**
3. DESCRIPTION To identify the data elements and format required to complete the Materiel Identification Data Set (MIDS) for each serialized item being procured. This data will be used to create the HELS Equipment Master Record.	
4. RELATED DOCUMENTS	5. CONTRACT REFERENCE **SOW**: **Para. 4.4.3.4.1 (pg. 14)** **CDRL**: **App. A2.2 (pg. 26)**

6. PREPARATION INSTRUCTIONS

6.1. **CONTENT**

6.1.1. The MIDS must contain the following data:

6.1.1.1. Unique Item Identification

6.1.1.1.1. Item Description (English)

6.1.1.1.2. Item Description (French)

6.1.1.1.3. Manufacturer's NCAGE

6.1.1.1.4. Manufacturer's Part Number (MPN)

6.1.1.1.5. Manufacturer's Serial Number

6.1.1.2. Parent Identification (where installed in higher level assembly):

6.1.1.2.1. Parent Manufacturer's NCAGE

6.1.1.2.2. Parent Manufacturer's Part Number (MPN)

6.1.1.2.3. Parent Manufacturer's Serial Number (if known)

6.2. **GENERAL FORMAT**

6.2.1. The MIDS must be presented in accordance with the MIDS Excel Sheet template referenced.

6.3. **SOFT COPY FORMAT**

6.3.1. The MIDS must be delivered as an Excel spreadsheet.

6.3.2. **Soft Copy format submission size below 7MB** – The [BLANK] may be submitted via email as follows:

6.3.2.1. To Field: As per the related CDRL section 9.A. Addressee, as identified in the contract.

6.3.2.2. Subject Field: HELS-ILS-211 – [BLANK] – [Rev #] – [Date of Issue]

6.3.3. **Soft Copy format submission size at or above 7MB** – The [BLANK] file must be submitted on CD or DVD media and be labelled as follows:

6.3.3.1. High Energy Laser System

6.3.3.2. Material Identification Data Set

6.3.3.3. HELS-ILS-211;

6.3.3.4. The Revision number, and

6.3.3.5. The date of issue.

A3.18 DID – Identification Plates – Design Template & Populated Designs

DATA ITEM DESCRIPTION	
1. TITLE **Identification Plates – Design Template & Populated Designs**	2. IDENTIFICATION NUMBER **DID HELS-ILS-212**
3. DESCRIPTION The Identification Plates uniquely identify equipment and components and spares based on the procedures governing the identification marking of Canadian military property.	
4. RELATED DOCUMENTS **D-02-002-001/SG-001** *Canadian Forces Standard Identification Marking of Canadian Military Property* **D-01-400-002/SF-000** *Specification - Levels of Engineering Drawings* **STANAG 2290 Ed. 2** *NATO Unique Identification of Items*	5. CONTRACT REFERENCE **SOW**: **Para. 4.5.1 (pg. 14)** **CDRL**: **App. A2.2 (pg. 26)**

6. PREPARATION INSTRUCTIONS

6.1. **CONTENT AND GENERAL FORMAT**

6.1.1. In accordance with D-02-002-001/SG-001, the Identification Plates affixed to each item included in Annex A SOW para 4.5.2 must be of size, format, and construction appropriate for the item being identified, and contain the data required for those Identification Plate formats in both official languages.

6.1.2. The Identification Plates Design Template & Populated Designs must be prepared as representative Level 2 drawings (see D-01-400-002/SF-000).

6.1.2.1. The Level 2 drawings must include the mounting or installation method for each Identification Plate, with any fasteners described by size, and/or technical standard, and/or NSN, and quantity.

6.1.3. Identification Plates for serially managed items must include a Unique Item Identifier in accordance with STANAG 2290 Ed. 2.

6.1.3.1. Identification Plates Design Template & Populated Designs must include Unique Item Identifier mark data qualifier and data elements.

6.2. **HARD COPY FORMAT**

6.2.1. The Identification Plates Design Template & Populated Designs must be:

6.2.1.1. Printed in 1:1 scale;

6.2.1.2. Printed on Standard US Ledger size paper (432 mm x 279 mm), with a:

6.2.1.2.1. Weight of no less than 90 g/m^2;

6.2.1.2.2. Brightness of no less than 96 ISO brightness;

6.3. **SOFT COPY FORMAT**

6.3.1. The Identification Plates Design Template & Populated Designs must be provided as PDF files, filename labelled in the following way: [Item Name]_[MRN].pdf.

6.3.2. The Identification Plates Design Template and Populated Designs PDFs containing text and illustrations in landscape, must be rotated for electronic viewing and reading in landscape.

6.3.3. **Soft Copy format submission size below 7MB** – The Identification Plates Design Template & Populated Designs may be submitted via email as follows:

6.3.3.1. To Field: As per the related CDRL section 9.A. Addressee, as identified in the contract.

6.3.3.2. Subject Field: HELS-ILS-212 – Identification Plates – [Rev #] – [Date of Issue]

6.3.4. **Soft Copy format submission size at or above 7MB** – The Identification Plates Design Template & Populated Designs file must be submitted on CD or DVD media and be labelled as follows:

6.3.4.1. High Energy Laser System

6.3.4.2. Identification Plates

6.3.4.3. HELS-ILS-212;

6.3.4.4. The Revision number, and

6.3.4.5. The date of issue.

A3.19 **DID – Controlled & Non-Controlled Goods List**

DATA ITEM DESCRIPTION	
1. TITLE **Controlled & Non-Controlled Goods List (CNCGL)**	2. IDENTIFICATION NUMBER **DID HELS-ILS-213**
3. DESCRIPTION Controlled Goods Items – The CNCGL identifies if the controlled goods end items, components and sub-components of the equipment are specifically designed and modified for military purpose, and provides the Demilitarization Instructions if required. Non-Controlled Goods Items – The CNCGL still includes non-controlled goods end items, components and sub-components of the equipment, as they will still require a DMC assignment.	
4. RELATED DOCUMENTS **C-02-007-000/AG-001** *Controlled Technology Access and Transfer (CTAT) Manual*	5. CONTRACT REFERENCE **SOW**: **Para. 4.6.1 (pg. 15)** **CDRL**: **App. A2.2 (pg. 26)**

6. PREPARATION INSTRUCTIONS

6.1. **CONTENT**

6.1.1. The CNCGL must identify end items accordingly, IAW C-02-007-000/AG-001:

6.1.1.1. For Canadian origin items, Canada's Export Control List (ECL) articles that apply in accordance with the Defence Product Act (DPA);

6.1.1.2. For US origin dual use, the Export Control Classification Number (ECCN) of the Commerce Control List that applies;

6.1.1.3. For US origin controlled goods also known as defence articles, the United States Munitions List (USML) Category and paragraph that apply in accordance with the International Traffic in Arms Regulations (ITAR);

6.1.1.4. For all other countries other than Canada and the USA, the category and article of the Wassenaar Control List that applies, and

6.1.1.5. All items require a Demilitarization Code (DMC).

6.2. **GENERAL FORMAT**

6.2.1. The CNCGL must be in spreadsheet format with 6 columns:

6.2.1.1. Item name;

6.2.1.2. Manufacturer's Reference Part Number;

6.2.1.3. Ref para for Canadian origin items (ECL);

6.2.1.4. Ref para for US origin controlled goods (USML);

6.2.1.5. Demilitarization Code (DMC);

6.2.1.6. Formal Demilitarisation Instructions, if DMC is F;

6.2.1.7. Remarks.

6.3. **HARD COPY FORMAT**

6.3.1. The CNCGL must be printed on paper with these characteristics:

6.3.1.1. Weight of no less than 90 g/m^2;

6.3.1.2. Brightness of no less than 96 ISO brightness;

6.4. **SOFT COPY FORMAT**

6.4.1. The CNCGL must be provided as an MS Excel Spreadsheet file.

6.4.2. **Soft Copy format submission size below 7MB** – The CNCGL may be submitted via email as follows:

6.4.2.1. To Field: As per the related CDRL section 9.A. Addressee, as identified in the contract.

6.4.2.2. Subject Field: HELS-ILS-213 – CNCGL – [Rev #] – [Date of Issue]

6.4.3. **Soft Copy format submission size at or above 7MB** – The CNCGL file must be submitted on CD or DVD media and be labelled as follows:

6.4.3.1. High Energy Laser System

6.4.3.2. CNCGL

6.4.3.3. HELS-ILS-213;

6.4.3.4. The Revision number, and

6.4.3.5. The date of issue.

A3.20 DID – Identification Labels for Storage & Shipment and Packaging Codes

DATA ITEM DESCRIPTION	
1. TITLE **Identification Labels for Storage & Shipment and Packaging Codes**	2. IDENTIFICATION NUMBER **DID HELS-ILS-214**
3. DESCRIPTION The Identification Labels for Storage & Shipment and Packaging Codes (CF271 forms) ensures that the labelling used to identify packages for items procured by DND and shipped to and stored at a Canadian facility comply with CAF specifications. As well, this will allow DND to obtain a complete record of packaging codes for catalogued items of the equipment.	
4. RELATED DOCUMENTS **D-LM-008-011/SF-001** *Preparation and Use of Packaging Requirements Codes* **D-LM-008-002/SF-001** *Specification for Marking for Storage and Shipment* **D-01-400-002/SF-000** Specification - *Levels of Engineering Drawings* **CF271** *Form (MS Excel version provided by DND after contract award)*	5. CONTRACT REFERENCE **SOW**: **Para. 4.7.3 (pg. 15)** **CDRL**: **App. A2.2 (pg. 26)**

6. PREPARATION INSTRUCTIONS

6.1. **CONTENT AND GENERAL FORMAT**

6.1.1. The Identification Labels for Storage & Shipment design, populated with the appropriate data, must be provided as Level 1 drawings (see D-01-400-002/SF-000) and include dimensions to show the measurements as defined by D-LM-008-002/SF-001 (example: text size, bar code dimensions).

6.1.2. A separate Packaging Code (CF271 Form) must be provided electronically for each item that:

6.1.2.1. Requires special packaging, packing, or preservation considerations to meet the required protection level (see 4.7.1 of the SOW), as per D-LM-008-011/SF-001 (see Table 1 below); and,

6.1.2.2. Has a NATO Stock Number (NSN).

6.1.3. The CF271 forms' file name must correspond to the item listed within, either by its part number or NSN (example: CF271 9422-01-552-8836.xls).

6.2. **HARD COPY FORMAT**

6.2.1. The Identification Labels for Storage & Shipment designs must be printed on paper with these characteristics:

6.2.1.1. Standard US Ledger size (432 mm x 279 mm)

6.2.1.2. Weight of no less than 90 g/m^2;

6.2.1.3. Brightness of no less than 96 ISO brightness;

6.3. **SOFT COPY FORMAT**

6.3.1. The Identification Labels for Storage & Shipment designs must be provided as PDF files.

6.3.2. The Identification Labels for Storage & Shipment designs PDFs containing text and illustrations in landscape, must be rotated for electronic viewing and reading in landscape.

6.3.3. The Packaging Codes (CF271 forms) must be provided as MS Excel Spreadsheet files.

6.3.4. **Soft Copy format submission size below 7MB** – The Identification Labels for Storage & Shipment and Packaging Codes may be submitted via email as follows:

6.3.4.1. To Field: As per the related CDRL section 9.A. Addressee, as identified in the contract.

6.3.4.2. Subject Field: HELS-ILS-214 – Identification Labels for Storage & Shipment and Packaging Codes – [Rev #] – [Date of Issue]

6.3.5. **Soft Copy format submission size at or above 7MB** – The Identification Labels for Storage & Shipment and Packaging Codes files must be submitted on CD or DVD media and be labelled as follows:

6.3.5.1. High Energy Laser System

6.3.5.2. Identification Labels for Storage & Shipment and Packaging Codes

6.3.5.3. HELS-ILS-214;

6.3.5.4. The Revision number, and

6.3.5.5. The date of issue.

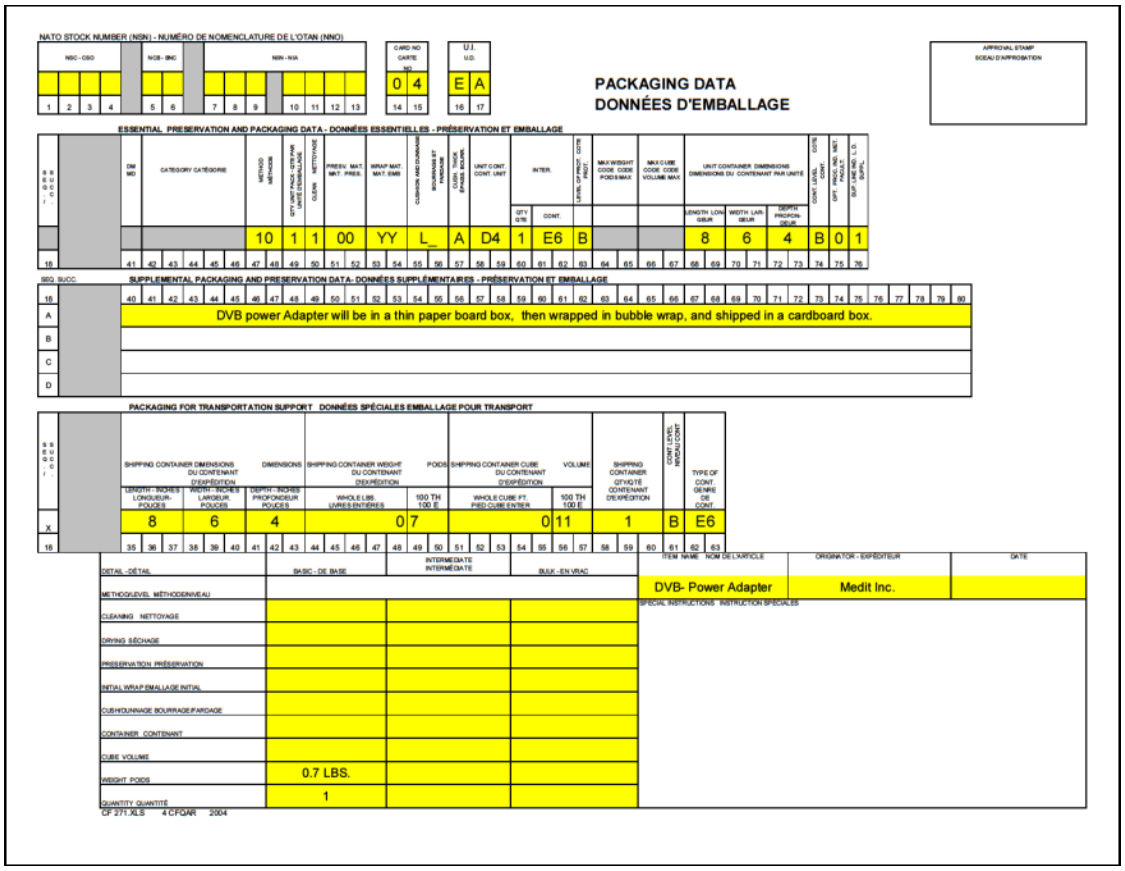

NATO STOCK NUMBER (NSN) - NUMÉRO DE NOMENCLATURE DE L'OTAN (NNO)

NSC - CSO	NCB - BNC	NIN - NIA	CARD NO CARTE NO	U.I. U.D.
			0 4	E A

PACKAGING DATA
DONNÉES D'EMBALLAGE

APPROVAL STAMP
SCEAU D'APPROBATION

ESSENTIAL PRESERVATION AND PACKAGING DATA - DONNÉES ESSENTIELLES - PRÉSERVATION ET EMBALLAGE

SEQ SUCC	DM MD	CATEGORY CATÉGORIE	METHOD MÉTHODE	QTY UNIT PACK - QTÉ PAR UNITÉ D'EMBALLAGE	CLEAN	PRESV. MAT. MAT. PRES.	WRAP MAT. MAT. EMB	CUSHION AND DUNNAGE	ROUGHNESS AT PRESSURE	CLEAN. THICK. EPAISS. NETTOYAGE	UNIT CONT. CONT. UNIT	INTER. QTY QTE	INTER. CONT.	LEVEL OF PROT. NIVEAU DE PROT.	MAX WEIGHT CODE CODE POIDS MAX	MAX CUBE CODE CODE VOLUME MAX	UNIT CONTAINER DIMENSIONS DIMENSIONS DU CONTENANT PAR UNITÉ LENGTH LONGUEUR	WIDTH LARGEUR	DEPTH PROFON. DEUR	CONT. LEVEL CONT.	QTY PROC. NO. NET. PRODUIT	SUP. PACK. I.D. SUPPL.
			10	1	1	00	YY	L_		A	D4	1	E6	B			8	6	4	B	0	1
18		41 42 43 44 45 46	47 48	49	50	51 52	53 54	55 56		57	58 59	60	61 62	63	64 65	66 67	68 69	70 71	72 73	74	75	76

SUPPLEMENTAL PACKAGING AND PRESERVATION DATA- DONNÉES SUPPLÉMENTAIRES - PRÉSERVATION ET EMBALLAGE

SEQ SUCC	
18	40 41 42 43 44 45 46 47 48 49 50 51 52 53 54 55 56 57 58 59 60 61 62 63 64 65 66 67 68 69 70 71 72 73 74 75 76 77 78 79 80
A	DVB power Adapter will be in a thin paper board box, then wrapped in bubble wrap, and shipped in a cardboard box.
B	
C	
D	

PACKAGING FOR TRANSPORTATION SUPPORT DONNÉES SPÉCIALES EMBALLAGE POUR TRANSPORT

SEQ SUCC	SHIPPING CONTAINER DIMENSIONS DU CONTENANT D'EXPÉDITION LENGTH - INCHES LONGUEUR - POUCES	WIDTH - INCHES LARGEUR - POUCES	DIMENSIONS DEPTH - INCHES PROFONDEUR POUCES	SHIPPING CONTAINER WEIGHT DU CONTENANT D'EXPÉDITION WHOLE LBS. LIVRES ENTIÈRES	PODS 100 TH 100 E	SHIPPING CONTAINER CUBE DU CONTENANT D'EXPÉDITION WHOLE CUBE FT. PIED CUBE ENTIER	VOLUME 100 TH 100 E	SHIPPING CONTAINER QTY/QTÉ CONTENANT D'EXPÉDITION	CONT LEVEL NIVEAU CONT	TYPE OF CONT. GENRE DE CONT.
X	8	6	4	0	7	0	11	1	B	E6
18	35 36 37 38 39 40 41	42 43	44 45 46 47	48 49 50	51 52 53	54 55 56 57		58 59 60	61	62 63

	BASIC - DE BASE	INTERMEDIATE INTERMÉDIATE	BULK - EN VRAC
DETAIL - DÉTAIL			
METHOD/LEVEL MÉTHODE/NIVEAU			
CLEANING NETTOYAGE			
DRYING SÉCHAGE			
PRESERVATION PRÉSERVATION			
INITIAL WRAP EMBALLAGE INITIAL			
CUSHIONING BOURRAGE/FARDAGE			
CONTAINER CONTENANT			
CUBE VOLUME			
WEIGHT POIDS	0.7 LBS.		
QUANTITY QUANTITÉ	1		

ITEM NAME NOM DE L'ARTICLE	ORIGINATOR - EXPÉDITEUR	DATE
DVB- Power Adapter	Medit Inc.	

SPECIAL INSTRUCTIONS INSTRUCTION SPÉCIALES

CF 271.XLS 4 CFGAR 2004

Table 1: Sample CF271 form

A3.21 **DID – List of Items to be Supported**

DATA ITEM DESCRIPTION	
1. TITLE **List of Items to be Supported**	2. IDENTIFICATION NUMBER **DID HELS-ILS-215**
3. DESCRIPTION The List of Items to be Supported (LIS) will provide the repairable/consumable item data, software items and technical data, which will be supported once the system is delivered. DND will use this information, along with the provisioning data, to populate the Support SOW Appendix A1.0 tables.	
4. RELATED DOCUMENTS	5. CONTRACT REFERENCE **SOW**: **Para. 4.8.1 (pg. 15)** **CDRL**: **App. A2.2 (pg. 26)**

6. PREPARATION INSTRUCTIONS

6.1. **CONTENT**

6.1.1. The LIS must provide an overview and understanding to DND on how the HELS and its associated equipment will be supported once the HELS is delivered. Refer to the Support SOW for further information.

6.1.2. The LIS must provide the following completed tables, stemming from the Concept of Operation & Support (in accordance with the Support SOW), and in accordance with the Maintenance Concept ANNEX A paragraph 4.1 (page 10):

6.1.2.1. Supported Equipment and Spares Table – This includes the repairable equipment or components of the complete system, STTE, and consumable equipment.

6.1.2.2. Supported Software Items Table – This includes all provided software, such as software resident in the Repairable Items or information systems.

6.1.2.3. Supported Technical Data Table – This includes the Technical Data and publications, and training material for which the Contractor will provide support.

6.2. **GENERAL FORMAT**

6.2.1. The LIS must be prepared as an MS Word document with tables.

6.3. **SOFT COPY FORMAT**

6.3.1. The LIS must be provided as an MS Word file.

6.3.2. **Soft Copy format submission size below 7MB** – The LIS may be submitted via email as follows:

6.3.2.1. To Field: As per the related CDRL section 9.A. Addressee, as identified in the contract.

6.3.2.2. Subject Field: HELS-ILS-215 – LIS – [Rev #] – [Date of Issue]

6.3.3. **Soft Copy format submission size at or above 7MB** – The LIS file must be submitted on CD or DVD media and be labelled as follows:

6.3.3.1. High Energy Laser System

6.3.3.2. LIS

6.3.3.3. HELS-ILS-215;

6.3.3.4. The Revision number, and

6.3.3.5. The date of issue.

Supported Equipment and Spares Table

An explanation of each column is detailed below:

1. System Identifier MRN/OEM Part No – A unique identifier for the Item, as used in the applicable technical manuals or supply management system.

2. Item Nomenclature – The name of the Item that may include Item class/group categories and functional descriptors.
3. NATO Stock Number (NSN) – The 13-digit identifier used in NATO and allied cataloguing systems. The NSN will be included if the Item is to be ordered by DND.
4. Regular or Free-Flow R&O by Item
    a. Repair Cost Estimate (RCE) – Identifies that the item will require a cost estimate before repairs or overhaul can begin.
        i. This is used for regular R&O when equipment is more complex so the TA requires more visibility on what is being proposed, has not yet reached steady-state and is therefore harder to predict typical repair costs/requirements, and repairs occur at a low rate.
    b. Maximum Repair Cost (MRC) – Identifies the maximum amount authorized that includes all labour and material costs, to be expended to repair an item. Repairs above the MRC must be approved by DND before any repair or overhaul work commences. Standard Selection Notice Observation Message procedures as detailed in A-LM-184-001/JS-001 must apply.
        i. This is used for free-flow R&O when equipment repairs are well understood or are less complex, and are used for repairs that occur at a high rate.
5. Repair Turn-Around-Time (TAT) – Identifies the Repair TAT, if different from the general Repair TAT, as defined in Support SOW, indicating that this item is of greater importance to the operation of the HELS and therefore requires a faster turn-around. Repair TAT is indicated in calendar days; if left blank, then general Repair TAT is followed.

NOTE: INFORMATION IN THIS TABLE WILL BE FINALIZED AFTER DELIVERY AND ACCEPTANCE OF THE PROVISIONING DOCUMENTATION.

Item Identifier MRN/OEM Part No. (1)	Item Nomenclature (2)	NSN (if item can be ordered) (3)	Regular or Free-Flow RCE/MRC (4)	Repair TAT (cal. Days) (5)

Supported Software Items Table

An explanation of each column is detailed below:

1. Identifier MRN/OEM Part No – A unique identifier for the Item of software, or the hardware that it is hosted on.

2. Item Nomenclature – The name of the Item that may include Item class/group categories and functional descriptors.

3. Software version number – The version or revision number of the software item.

NOTE: INFORMATION IN THIS TABLE WILL BE FINALIZED AFTER DELIVERY AND ACCEPTANCE OF THE TECHNICAL PUBLICATIONS.

Identifier MRN/OEM Part No. (1)	Item Nomenclature (2)	Software Version Number (3)

Supported Technical Data Table

An explanation of each column is detailed below:

1. Publication Number – The unique identifier for the published Item of Technical Data.

2. Title – The title of the item of Technical Data.

NOTE: INFORMATION IN THIS TABLE WILL BE FINALIZED AFTER DELIVERY AND ACCEPTANCE OF THE TECHNICAL PUBLICATIONS.

Publication Identifier (1)	Title (2)

A3.22 DID – Equipment Environmental Assessment

DATA ITEM DESCRIPTION	
1. TITLE **Equipment Environmental Assessment (EEA)**	2. IDENTIFICATION NUMBER **DID HELS-ILS-216**
3. DESCRIPTION The EEA identifies and documents potential environmental impacts of the equipment over the entire life-cycle and the associated mitigation measures required to reduce or eliminate them.	
4. RELATED DOCUMENTS	5. CONTRACT REFERENCE **SOW**: **Para. 5.4.1 (pg. 18)** **CDRL**: **App. A2.2 (pg. 26)**

6. PREPARATION INSTRUCTIONS

6.1. **CONTENT**

6.1.1. **Title Page**

6.1.1.1. Equipment Name and NSN (if available).

6.1.1.2. Assessment Contact: Name, title and company name of the author of the EEA.

6.1.2. **Executive Summary**

6.1.2.1. Provide a brief summary of potential environmental impacts and recommended mitigation measures for each life-cycle (test and evaluation following production, operation and maintenance, and demilitarization and disposal).

6.1.3. **Equipment Description**

6.1.3.1. Equipment description: Provide an overview of the equipment and identify each major sub-system as per the Equipment Breakdown Structure.

6.1.3.2. For each major sub-system, identify the following:

6.1.3.2.1. Hazardous substances that are incorporated into the equipment. Provide additional information in tabular form in Table 1.

6.1.3.2.2. Chemical products listed in Table 1.

6.1.3.2.3. Ionizing radiation sources (radioisotopes and x-ray), e.g.: Uranium, Radon, plutonium and tritium etc. in Table 2.

6.1.3.2.4. Non-ionizing radiation sources (radiofrequency and lasers) in Table 2.

6.1.3.3. Provide Safety Data Sheets (SDS) that are less than three years old for all chemical products in accordance with WHMIS 2015 requirements in Annex A for all chemical products.

6.1.4. **Environmental Assessment**

6.1.4.1. For each lifecycle phase (test and evaluation following production, operation and maintenance, and demilitarization and disposal) discuss the following:

6.1.4.1.1. Lifecycle activities: Describe anticipated activities (including operator and maintenance tasks that are detailed in Contractor provided Technical Documentation) and identify if any of these activities have the potential to: release a polluting substance to air, water or land (e.g. exhaust emissions, hazardous waste, spills, etc.); impact human health; noise or vibration; and/or alter landscape features. Note: The scope of the EEA excludes activities related to the use of munitions.

6.1.4.1.2. Environmental impacts: Describe the potential environmental impacts identified above.

6.1.4.1.3. Mitigation Measures: Describe mitigation measures to eliminate or reduce identified potential environmental impacts, including those that are part of the design, any warning devices,

emission control equipment, spill response, safe handling and disposal procedures, training, PPE, labels on equipment, cautions and warnings in the Technical Documentation, monitoring or inspections, etc.

6.1.5. **Conclusions and Recommendations**

6.1.5.1. Summarize the main environmental impacts and recommended mitigation measures.

6.1.6. **References**

6.1.6.1. List references consulted in the completion of the tables (such as Canadian legislation, DND policies and procedures, technical documentation, etc.).

6.1.7. **Table 1 - Identification of Hazardous Substances and Chemical Products**

Table 1 lists the integrated hazardous substances and chemical products that must be identified, if they are incorporated in the equipment design. The hazardous chemical products must have safety data sheets (SDS) which conform to WHMIS 2015, and must be provided in Annex A.

Integrated Hazardous Substances	**NSN**	**Original OEM Part Number**	**Item Description**	**Location**	**Additional Details**
Arsenic, Cadmium, Chromium VI, Cobalt, Lead, Radioactive metals					
Halocarbons – refrigerant and air-conditioning systems					Type and weight (kg). Global Warming Potential of Hydrofluorocarbons used for refrigerant applications.
Mercury and its compounds					Form of mercury (e.g. liquid, vapour) and weight (mg)
Polychlorinated Biphenyl (PCBs)					Form (liquid or solid), quantity (kg), volume (L) and concentration in ppm
Hazardous Chemical Products (SDS Required)	**NSN**	**Original OEM Part Number**	**Ingredient**	**Chemical Abstract Service Number (CAS#)**	**Controls***
Halocarbons – Fire extinguishing systems					
Halocarbons – In aerosol Products					
Paints and related commodities (CARC and non-CARC)					
Fire-fighting Foams					
Cleaner and Degreasers					
POLs (Petroleum, Oils, Lubricants)					
Adhesives					
Anti-seize					
Corrosion Inhibitor					
Decontaminant					
Detector Kit Chemical substances					

*Controls: Identify if the substance is regulated under the Canadian Environmental Protection Act, targeted in Schedule 1, Toxic Substance List under CEPA and/or subject to the reporting requirements under the National Pollutant Release Inventory (NPRI).

6.1.8. **Table 2 – Identification of radiation sources and batteries**

Table 2 lists the ionizing and non-ionizing radiation sources and batteries.

Categories	NSN	Original OEM Part Number	Item Description	Location *	Additional Details
Non-ionizing radiation					Type of electromagnetic energy (laser, microwave, radio frequency) and strength
Ionizing radiation					Type and quantity or activity level
Batteries					Type

* Identify the system/sub-system where these items are located.

6.1.9. **Annex A – Safety Data Sheets SDS for all chemical products identified in the EEA**

6.2. **SOFT COPY FORMAT**

6.2.1. The EEA must be provided as a PDF file.

6.2.2. **Soft Copy format submission size below 7MB** – The EEA may be submitted via email as follows:

6.2.2.1. To Field: As per the related CDRL section 9.A. Addressee, as identified in the contract.

6.2.2.2. Subject Field: HELS-ILS-216 – EEA – [Rev #] – [Date of Issue]

6.2.3. **Soft Copy format submission size at or above 7MB** – The EEA file must be submitted on CD or DVD media and be labelled as follows:

6.2.3.1. High Energy Laser System

6.2.3.2. EEA

6.2.3.3. HELS-ILS-216;

6.2.3.4. The Revision number, and

6.2.3.5. The date of issue.

ANNEX B

STATEMENT OF WORK

FOR THE SUPPORT OF THE

HIGH ENERGY LASER SYSTEM

Version/Amendment History

Version/Amendment	Date	Notes
Original	July 18 2022	

TABLE OF CONTENTS

1.0 SCOPE

1.1 Purpose

1.1.1 The purpose of this Statement of Work (SOW) is to describe DND's requirements for work to be carried out by the Contractor, including the provision of material and Repair & Overhaul (R&O), in support of the High Energy Laser System (HELS).

1.1.2 Work will be conducted and completed either in Canada at Canadian Armed Forces (CAF) locations, at operational sites where CAF are deployed, or at the Contractor's plant.

1.2 Concept of Operations & Support

1.2.1 The Concept of Operations provides context necessary to fully understand the SOW.

Aspect	Description
Anticipated service life	10 to 15 years
Annual operating hours	Difficult to predict because of intermittent usage. Continuous operation when in use.
DND Responsibilities for Maintenance	The HELS will be maintainable by CAF operators and technicians in a field environment as prescribed for each item of equipment: **Operator Maintenance** – consisting of maintenance that will not require Special Tools and Test Equipment (STTE) to complete, as well as equipment cleaning. Task duration generally less than one (1) hour. **Technician Maintenance, First Line** – consisting of preventive and minor corrective maintenance tasks by repair or replacement of parts, and could require STTE to complete this maintenance. Task duration generally less than four (4) hours.
Contractor Responsibilities for Maintenance	The more in-depth maintenance tasks, consisting of corrective maintenance tasks, reconditioning of assemblies and component rebuilds, will be done through this support contract.
Contractor Training Responsibility	Contractor will provide Operator and Technician training as and when required. Training material is being provided through the Acquisition Contract.

1.3 Land Equipment Management System

1.3.1 The Contractor should be familiar with the Land Equipment Management System (LEMS) that is documented in B-GL-342-001/FP-000, which describes the DND approach to the management of land equipment.

1.4 Contractors Performing R&O

1.4.1 Some of the work performed by the Contractor will be repair and overhaul of equipment. The *Special Instructions Repair and Overhaul Contractors* (A-LM-184-001/JS-001) describes the instructions and procedures governing civilian contractors engaged in the R&O of material on behalf of the DND.

1.5 Acronyms and Abbreviations

AAS	Accountable Advance Spares
AEFC	Army Equipment Fielding Center
AWR	Additional Work Request
CA	Contracting Authority
CAF	Canadian Armed Forces
CER	Combat Engineer Regiment
CDRL	Contract Data Requirements List
CFB	Canadian Forces Base
CFSD	Canadian Forces Supply Depot
CFSME	Canadian Forces School of Military Engineering
CGCS	Canadian Government Cataloguing System
CIS	Contract Issue Spares
CORE	Designates CORE (fixed price basis) requirements
CRPA	Contractor Repair Parts Account
CRCI	Catalogue of Repairable and Consumable Items
CSA	Canadian Standards Association
CSR	Contract Status Report
DGLEPM	Director General Land Equipment Program Management
DID	Data Item Description
DND	Department of National Defence
DRMIS	Defence Resources Management Information System
DSCO	Director Supply Chain Operations
EMT	Equipment Management Team
ESR	Engineer Support Regiment
FSR	Field Service Representative
GFOS	Government Furnished Overhaul Spares
IAW	In Accordance With
ILS	Integrated Logistic Support
IP	Intellectual Property
ITAR	International Traffic in Arms Regulations
LEMS	Land Equipment Maintenance System
MRC	Maximum Repair Cost
NATO	North Atlantic Treaty Organization
NCAGE	NATO Commercial and Government Entity
NSN	NATO Stock Number

NTM	Notice to Move
OEM	Original Equipment Manufacturer
PA	Procurement Authority
PDF	Portable Document Format
PM	Program Management
PSPC	Public Service and Procurement Canada
R&O	Repair and Overhaul
RbR	Repair by Replacement
RCE	Repair Cost Estimate
RGC	Régiment de génie de combat
RMA	Repair Material Account
RSA	Repair Shop Account
SMP	Support Management Plan
SNAPS	Selection Notice and Priority Summary
SOW	Statement of Work
SPTD	Supplementary Provisioning Technical Documentation
STTE	Special Tools and Test Equipment
TA	Technical Authority
TASKING	Designates TASKING (as and when needed) requirements
TAT	Turn-around-time
TDP	Technical Data Package
TDPL	Technical Data Plan & List
TIES	Technical Investigation and Engineering Support
TPM	Technical Problem Management

2.0 APPLICABLE DOCUMENTS

2.1 References

2.1.1 Whereas mentioned, the following Standards must be used for the preparation of deliverables to the extent specified in this SOW:

REFERENCE NUMBER	PROMULGATION DATE	REFERENCE TITLE
A-LM-184-001/JS-001	2019-05-06	SPECIAL INSTRUCTIONS REPAIR AND OVERHAUL CONTRACTORS
SAE ANSI/EIA-649C	2019	CONFIGURATION MANAGEMENT STANDARD
B-GL-342-001/FP-000	2001-09-10	LAND EQUIPMENT MANAGEMENT SYSTEM (LEMS)
C-02-005-009/AM-000	2019-10-31	INSPECTION AND CONDITIONING OF MATERIAL RETURNED TO AND HELD IN THE SUPPLY SYSTEM
D-01-100-214/SF-000	2020-09-30	SPECIFICATION - PREPARATION OF PROVISIONING DOCUMENTATION FOR CANADIAN FORCES EQUIPMENT
D-01-400-001/SG-000	2021-09-30	STANDARD - ENGINEERING DRAWING PRACTICES
D-LM-008-001/SF-001	1983-02-03	METHODS OF PACKAGING
D-LM-008-002/SF-001	1991-08-01	SPECIFICATION FOR MARKING FOR STORAGE AND SHIPMENT
D-LM-008-011/SF-001	1988-11-10	PREPARATION AND USE OF PACKAGING REQUIREMENTS CODES
SOR/2003-289		FEDERAL HALOCARBON REGULATIONS
SOR/2008-273		PCB REGULATIONS
SOR/2014-254		PRODUCTS CONTAINING MERCURY REGULATIONS
SOR/2016-137		OZONE-DEPLETING SUBSTANCES AND HALOCARBON ALTERNATIVES REGULATIONS

2.2 Order of Precedence

2.2.1 In the event of conflict between the content in this SOW and the referenced documents, the content of this SOW will take precedence.

3.0 R&O REQUIREMENTS

3.1 Program Management

3.1.1 General

3.1.1.1 Contractor Test Facilities

3.1.1.1.1 The Contractor must possess or have access to testing facilities required to confirm serviceability of the equipment after repair or upgrade work on the HELS or its equipment.

3.1.1.2 Contractor Publication Resources

3.1.1.2.1 The Contractor, or their sub-Contractor, must have office resources necessary to produce electronic manuals, technical drawings, and other logistics and engineering documentation.

3.1.2 Program Meetings

3.1.2.1 Meeting Organization and Coordination

3.1.2.1.1 The Contractor must ensure that the necessary data, personnel and facilities are available for each meeting.

3.1.2.1.2 As appropriate, meetings may be held at the Contractor's or DND facilities at the discretion of the DND EMT.

3.1.2.1.3 The Contractor's Program Manager must be present at all meetings. If the Program Manager does not have final approval authority for decision making and changes, then the person that has that final approval authority must also be present at all meetings.

3.1.2.2 Kick-off Meeting

3.1.2.2.1 The Contractor must hold and chair, along with Canada, a Kick-off Meeting no later than 21 calendar days after contract award, to review and secure a common understanding of the requirements expressed in this contract.

3.1.2.3 Other meetings

3.1.2.3.1 The Contractor and the DND EMT may schedule informal reviews, such as conference calls, webinars (conference calls augmented by simultaneous PowerPoint presentations on the Internet), video conferences, briefings and technical interchange meetings, as required to help achieve the requirements of the contract.

3.1.2.4 Meeting Documentation

3.1.2.4.1 The Contractor must provide Meeting Agendas IAW CDRL HELS-PM-001 at Appendix A2.2 (page 23) and its associated DID HELS-PM-001 at Appendix A3.3 (page 25).

3.1.2.4.2 The Contractor must record and provide the Meeting Minutes IAW CDRL HELS-PM-002 at Appendix A2.2 (page 23) and its associated DID HELS-PM-002 at Appendix A3.4 (page 27).

3.1.2.4.3 No change in the interpretation of the program management, SOW, cost, or schedule, as defined in the contract, may be authorized by the minutes of a meeting. Such change must require formal contract amendment by the CA.

3.1.3 Government Property

3.1.3.1 All equipment / spares / parts that may be provided to the Contractor in support of the HELS, including those purchased during the contract, must be considered DND-owned, regardless of being held at the Contractor's facility.

3.1.3.1.1 Government-owned and DND-owned must be considered as interchangeable terms.

3.1.3.2 The Contractor must provide suitable protections, such as a separated secure storage facility and insurance, to protect all Government Supplied Materials, including equipment, spares, parts, Technical Data Package (TDP), documentation, software, and Special Tools & Test Equipment.

3.1.4 DND Material Supply Logistics

3.1.4.1 The Contractor must refer to section A4.0 and A-LM-184-001/JS-001, for further requirements for equipment logistics for DND-owned equipment.

3.1.4.2 Supply Accounts for DND-owned Material

3.1.4.2.1 The Contractor will be allocated a Repairable Material Account (RMA). All material (generally prime equipment and Line Replaceable Units that are DND-owned) shipped to the Contractor must be identified in the Defence Resource Management Information System (DRMIS) against the assigned RMA.

3.1.4.3 Contract Issue Spares

3.1.4.3.1 The Contractor must maintain visibility of DND-owned material, classified as Contract Issue Spares (CIS).

3.1.4.3.1.1 To account for these CIS, the Contractor will be allocated a Contractor Repair Parts Account (CRPA) and a Repair Shop Account (RSA).

3.1.4.4 Stock Control and Stock Taking (DND-owned Material)

3.1.4.4.1 The Contractor must perform stock control and stocktaking of DND-owned Contractor held inventory, including:

3.1.4.4.1.1 Institute, maintain and apply a system for inventory accounting, control, storage and handling, preservation, protection and maintenance.

3.1.4.4.1.2 Designate, allocate and prepare a storage area in its facility specifically to accommodate DND-owned stock.

3.1.4.4.1.3 As a risk mitigation measure, in case of a strike or lockout action, ensure that DND has continued access to, and protection of, inventory that it requires in support of operations.

3.1.4.4.1.4 Initiate and complete a one hundred per cent (100%) manual stocktaking (visual confirmation) of RMA, RSA, CRPA (CIS) and all material listed in the Contractor Held Inventory Report, one (1) time each year.

3.1.4.4.1.5 The Contractor must promptly conduct investigations into every discrepancy arising from stocktaking of Contractor managed DND-owned material, and must immediately notify DND of all deficiencies that are discovered.

3.1.5 Hazardous Materials

3.1.5.1 The Contractor must be solely responsible for the handling, transportation and disposal of all waste, and hazardous waste material generated as a result of the work in this SOW.

3.1.6 Environmental Management and Assessment

3.1.6.1 General

3.1.6.1.1 The Contractor must use low-risk chemical products for equipment maintenance and repair where feasible. Low-risk chemical products are defined as those that do not contain substances regulated under the Canadian Environmental Protection Act, 1999 (CEPA) and listed on Schedule 1 of CEPA.

3.1.6.1.2 The Contractor is responsible for ensuring that all work carried out on DND equipment by staff, or duly appointed sub-contractors, is:

3.1.6.1.2.1 Completed using personnel qualified and certified in the scope of work that they are undertaking and,

3.1.6.1.2.2 In compliance with all applicable municipal, territorial, provincial, federal environmental protection statutes and regulations.

3.1.6.1.3 The Contractor must provide (when asked) and ensure the use of up-to-date (no older than three (3) years) Material Safety Data Sheets.

3.1.6.1.4 In accordance with the Federal Halocarbon Regulations (SOR/2003-289) and the Ozone-depleting Substances and Halocarbon Alternatives Regulations (SOR/2016-137), any halocarbons that are incorporated into the equipment, must comply with regulations SOR/2003-289 and SOR/2016-137. If such substances must be used, the Contractor must:

3.1.6.1.4.1 Inform the Technical Authority by identifying the substance(s).

3.1.6.1.4.2 Identify the specific location within the equipment and the quantity.

3.1.6.1.5 In accordance with the Products Containing Mercury Regulations (SOR/2014-254), if mercury is present in any part of the equipment, the mercury content limit must comply with the regulation SOR/2014-254. If such substances must be used, the Contractor must:

3.1.6.1.5.1 Inform the Technical Authority by identifying the substance(s).

3.1.6.1.5.2 Identify the specific location within the equipment and the quantity.

3.1.6.1.6 In accordance with the Polychlorinated Biphenyls (PCBs) Regulations (SOR/2008-273), if PCBs are present in any part of the equipment, they must comply with the regulation. If such substances must be used, the Contractor must:

3.1.6.1.6.1 Inform the Technical Authority by identifying the substance(s).

3.1.6.1.6.2 Identify the specific location within the equipment and the quantity

3.1.6.2 Environmental Management System

3.1.6.2.1 The Contractor must implement and maintain an Environmental Management System which is consistent with the principles presented in ISO 14001. Certification to this standard is preferred but not mandatory.

3.1.6.2.2 The Contractor must have a formalized set of procedures and control measures in place to demonstrate environmental compliance and minimize environmental impact of the work.

3.2 Operating, Training & Engineering Support

3.2.1 General

3.2.1.1 A TASKING request defines the scope / objectives and may be initiated by either Canada or by the Contractor. If initiated by the Contractor, the following information must be provided:

3.2.1.1.1 Estimated duration;

3.2.1.1.2 Reporting frequency and format;

3.2.1.1.3 Level of effort, and

3.2.1.1.4 Estimated cost.

3.2.2 Operators and Technical Personnel

3.2.2.1 In order to provide satisfactory operators and technical personnel (Field Service Representatives & Mobile Repair Parties are possibly the same resources), the Contractor must provide the following:

3.2.2.1.1 Operators and technical personnel that can provide training on the HELS.

3.2.2.1.2 Operators and technical personnel that can work extended hours and during holidays.

3.2.2.1.3 Operators and technical personnel that can perform in-depth maintenance on the HELS.

3.2.2.1.4 Operators and technical personnel that can mentor and advise CAF operators and technicians in the performance of their tasks using the HELS.

3.2.2.1.5 Operators and technical personnel that are knowledgeable of the Contractor's engineering and support organization and able to obtain a quick response to queries regarding technical concerns and material status.

3.2.3 Technical Investigation and Engineering Support

3.2.3.1 The Contractor must provide TIES, when and as requested by DND. Such tasks could include:

3.2.3.1.1 Conducting specialized testing;

3.2.3.1.2 Performing specialist engineering studies, such as human factors, survivability, electromagnetic interference/compatibility, safety and health, reliability and maintainability;

3.2.3.1.3 Providing engineering assessments and recommendations (for example, regarding trends, failures (including repetitive failures), defects, safety hazards, corrosion, and technology insertion);

3.2.3.1.4 Developing alternate or supplementary operating, maintenance, and supply procedures;

3.2.3.1.5 Rationalizing the preventive maintenance requirements in areas where there is a potential for significant improvements in maintenance effectiveness or efficiency;

3.2.3.1.6 Preparing technical bulletins and preparing supporting technical data;

3.2.3.1.7 Developing repair schemes for potential repairs not covered in maintenance manuals;

3.2.3.1.8 Preparing additional publications or amendments to existing publications;

3.2.3.1.9 Translating technical publications into either Canadian official language (English or Canadian French);

3.2.3.1.10 Performing post battle damage assessments, and determine how to return equipment to a serviceable state, or if it can be cannibalized for parts;

3.2.3.1.11 Designing and developing modifications/upgrades/conversions, updating drawings, preparing modification installation instructions and providing modification installation kits;

3.2.3.1.12 Investigating software faults, and viruses, and develop solutions. Update software embedded in the system or its associated equipment;

3.2.3.1.13 Assessing regulatory compliance, especially regarding safety and protection of the environment;

3.2.3.1.14 Obtain CSA/UL or equivalent safety certifications for the equipment that has been modified or repaired through the work under this contract.

3.2.3.2 On completion of the TIES, the Contractor must report its findings to the DND TA within 14 calendar days, or another timeframe agreed to by the DND TA.

3.3 Maintenance Support

3.3.1 General

3.3.1.1 The terms ‘repair’ and ‘overhaul’ are defined as follows:

3.3.1.1.1 Repair - The identification and correction of those specific defects which degrade the performance of an item, causing it to function below its specification or not as described in its operations manual.

3.3.1.1.2 Overhaul - The restoration of an item to its original condition and life expectancy. It includes the replacement of worn, damaged or life expired parts; the incorporation of approved modifications; and the rework of components as necessary.

3.3.1.2 The Contractor must provide Maintenance Support, including Repair and Overhaul (R&O), for the repairable items listed in A1.0 List of Items to be Supported (page 19).

3.3.1.3 The Contractor must perform R&O in accordance with this SOW, A-LM-184-001/JS-001 Special Instructions Repair and Overhaul Contractors, and the Quality Assurance requirements stated in para. 3.3.4, such that the CAF will be provided with functional, safe and reliable HELS.

3.3.1.4 The Contractor must use parts and materials as per the most recent or OEM design configuration.

3.3.1.4.1 Changes to the parts, equipment configuration, or design must be approved by the TA, and executed in accordance with the SOW.

3.3.2 Minimum and Forecasted Repairs

3.3.2.1 The minimum number of items that may be processed through the R&O facility may be zero.

3.3.2.2 The Current Year Forecast and Next Year Forecast quantity is dependent upon the quantity in service and operational urgency, and is defined in Appendix A1.0 List of Items to be Supported (page 19).

3.3.2.3 Updates to the Current Year Forecast and Next Year Forecast will be provided through the Selection Notice and Priority Summary (SNAPS) Report as detailed in A-LM-184-001/JS-001.

3.3.3 Extent of R&O Maintenance

3.3.3.1 The Contractor must provide R&O Maintenance support to the extent listed here:

3.3.3.1.1 Materials - All equipment system components must be inspected and repaired as required. Defective components shall be repaired or replaced.

3.3.3.1.2 Mechanical - All mechanical systems must be inspected and repaired as required. Defective components must be repaired or replaced.

3.3.3.1.3 Electrical - All electrical components must be inspected, tested and repaired as required. Defective components must be repaired or replaced.

3.3.3.1.4 Safety - All systems/components affecting the safety of the user/operator or those affecting hazardous operation of the equipment must be inspected and tested for correct operation. Defective components must be replaced. All warning decals, labels, data plates must be clear and legible.

3.3.4 Quality Assurance

3.3.4.1 Quality of R&O Work

3.3.4.1.1 The R&O must be performed in accordance with this SOW and the Quality Assurance requirements stated herein, such that the CAF will be provided with functional, safe and reliable equipment. In the case of differences among these references, this SOW takes precedence.

3.3.4.2 Quality Assurance Representative

3.3.4.2.1 All stages of the R&O procedures will be subject to inspection by a Canadian Government DND Quality Assurance Representative unless DND authorizes otherwise. The representative will monitor for best industrial practices and will have the authority to stop work if poor practices or dangerous conditions are noted and cannot be resolved on-site.

3.3.4.3 Testing and Inspection

3.3.4.3.1 The Contractor must perform testing to confirm serviceability for each piece of repaired/overhauled equipment.

3.3.4.3.2 The Contractor must prepare a test report in the Contractor's format. A copy of the report must be retained by the Contractor and a copy forwarded electronically to the TA.

3.3.4.3.3 The Contractor must visually inspect all completed equipment for security of components and hazardous conditions, and all deficiencies must be noted and repaired.

3.3.5 Repair Turn-Around-Time (TAT)

3.3.5.1 The Contractor must complete repairs **within ninety (90) calendar days from receipt**, unless otherwise indicated in Appendix A1.0 List of Items to be Supported (page 19) or by the DND EMT.

3.3.5.1.1 The repair TAT includes all the time that the item requiring repair is in the custody of the Contractor, from receipt at the handover point to return to the handover point.

3.3.5.2 In the case of a priority repair request, system-level refurbishment, or battle damage repair, the DND EMT will provide a SOW defining the scope of work and new schedule, as a TASKING.

3.3.6 Repair Cost Estimates (RCE)

3.3.6.1 Upon receipt of the Repairable Items indicating an RCE, as shown items in Appendix A1.0 List of Items to be Supported (page 19), the Contactor must provide an RCE including all labour, sub-contracting and shipping, materiel costs and administration fees to the TA for approval before the repair can proceed.

3.3.6.2 If DND provides spare parts to the Contractor, or spare parts are already Contractor Held and Managed, the Contractor must deduct the value of the parts from the RCE of the item for which the parts are intended.

3.3.7 Condemn/Scrapping Considerations

3.3.7.1 If it is decided not to repair the equipment, the DND EMT will provide guidance on scrapping procedures to the Contractor at that time.

3.3.7.2 If the equipment contains embedded software (and possibly data) it may be necessary to erase the stored software and data prior to disposing of the equipment. In such cases, the Contractor must seek direction from the DND EMT.

3.3.7.3 When DND-owned equipment is to be scrapped, the Contractor must take care to comply with all International Traffic in Arms Regulations (ITAR) regarding the disposal method used and record keeping.

3.3.7.3.1 Guidance on disposal is available through assigned Demilitarization Codes.

3.3.8 Software Maintenance

3.3.8.1 The Contractor must perform routine software maintenance including software installation, data load and unload, backup and recovery, release replication and distribution.

3.3.9 Provision of Material (R&O)

3.3.9.1 The Contractor must obtain the parts (repairable and consumable items) required for the R&O Maintenance Support, including locating sources of supply.

3.3.9.2 The Contractor must obtain and make available parts for **'Repair by Replacement'** (RbR) situations, where the repair can be done in the field.

3.3.9.2.1 RbR situations also apply to parts that are required so rarely that they would never be stocked in depot, and the cost is minimal compared to the transport cost of shipping the HELS back for R&O Maintenance Support at the Contractor's site.

3.3.9.2.2 RbR parts would be requested on an as and when required basis that will be detailed in a DND 626 Task Authorization.

4.0 CONTRACT DELIVERABLES

4.1 Repaired Material

4.1.1 The Contractor will receive direction from the TA for the final delivery destination of all repaired materiel on an individual basis; however, if not received the default delivery will be to 7 Canadian Forces Supply Depot.

4.1.2 The Contractor must include a properly completed and signed CF942/CF942A Materiel Condition Tag/Label, when applicable, IAW C-02-005-009/AM-000 Inspection and Condition of Materiel Returned to and Held in the Supply System, for all returned items.

4.1.2.1 The CF942/CF942A Tags/Labels are to be directly attached to the materiel returned after repair and overhaul IAW C-02-005-009/AM-000, and will be provided by DND Quality Assurance Representative.

4.2 R&O Service Record and Test Report

4.2.1 The Contractor must provide an R&O Service Record and Test Report with each piece of equipment for shipment, returning from R&O.

4.3 Data Deliverable List

4.3.1 The Contractor must prepare and deliver all data deliverables required under the Contract as summarized in para. 4.4.

Note: ‘LOT’ equates to a varied quantity needed to fulfill the requirements of the CDRL.

4.4 List of Support Requirements & Data Deliverables

Item	Item Description	Initial Submission/ Delivery QTY	Subsequent Submissions / Replenishment
1	Program Management – work performed continuously under a fixed price basis.	As defined in section 3.1 within Annex A	-
2	Meeting Agenda (para 3.1.2.4.1)	1	LOT
3	Meeting Minutes (para 3.1.2.4.2)	1	LOT
4	Operator, Training & Engineering Support – work performed through DND 626 Task Authorization process (as-and-when requested work).	As defined in section 3.2 Within Annex A	-
5	R&O Maintenance Requirements – work performed as a pre-authorized R&O repair	As defined in section 3.3 Within Annex A	-
6	R&O Service Record and Test Report	LOT – with the equipment for shipment	LOT – with the equipment for shipment

A1.0 APPENDIX: LIST OF ITEMS TO BE SUPPORTED

A1.1 Supported Equipment and Spares

A1.1.1 The Contractor must provide support for the equipment and spare items specified in Table 1 in accordance with the SOW. An explanation of each column is detailed below:

A1.1.1.1 System Identifier MRN/OEM Part No – A unique identifier for the Item, as used in the applicable technical manuals or supply management system.

A1.1.1.2 Item Nomenclature – The name of the Item that may include Item class/group categories and functional descriptors.

A1.1.1.3 NATO Stock Number (NSN) – The 13-digit identifier used in NATO and allied cataloguing systems. The NSN will be included if the Item is to be ordered by DND.

A1.1.1.4 Regular or Free-Flow R&O by Item

A1.1.1.4.1 Repair Cost Estimate (RCE) – Identifies that the item will require a cost estimate before repairs or overhaul can begin.

A1.1.1.4.1.1 This is used for regular R&O when equipment is more complex so the TA requires more visibility on what is being proposed, has not yet reached steady-state and is therefore harder to predict typical repair costs/requirements, and repairs occur at a low rate.

A1.1.1.4.2 Maximum Repair Cost (MRC) – Identifies the maximum amount authorized that includes all labour and material costs, to be expended to repair an item. Repairs above the MRC must be approved by DND before any repair or overhaul work commences. Standard Selection Notice Observation Message procedures as detailed in A-LM-184-001/JS-001 must apply.

A1.1.1.4.2.1 This is used for free-flow R&O when equipment repairs are well understood or are less complex, and are used for repairs that occur at a high rate.

A1.1.1.5 Repair Turn-Around-Time (TAT) – Identifies the Repair TAT, if different from the general Repair TAT, as defined in Support SOW, indicating that this item is of greater importance to the operation of the HELS and therefore requires a faster turn-around. Repair TAT is indicated in calendar days; if left blank, then general Repair TAT of 90 calendar days is followed.

A1.1.1.6 Current Year & Next Year Forecasts – Identifies the expected quantity, by fiscal year, of repairable equipment that will be passed through the R&O line.

Table 1: Supported Equipment and Spares

Item Identifier MRN/OEM Part No. (1)	Item Nomenclature (2)	NSN (if item can be ordered) (3)	Regular or Free-Flow RCE/MRC (4)	Repair TAT (cal. Days) (5)	Current Year Forecast 22/23 (6)	Next Year Forecast 23/24 (7)
	HELS		RCE			

A2.0 APPENDIX: CONTRACT DATA REQUIREMENTS LIST

A2.1 Management and Explanation of the CDRL

A2.1.1 Management of Data Items

A2.1.1.1 The Contractor must review, update and deliver amendments, or confirm the continuing accuracy of data items annotated with a maintenance period, in accordance with the CDRL.

A2.1.1.2 The Contractor must deliver amended, reissued or resubmitted data items to the location(s) and in the format and quantities specified in the CDRL for the initial submission of the data items.

A2.1.2 Explanation of the CDRL

A2.1.2.1 **CDRL Line Number** – This field provides the unique sequential number that identifies each data item within different functional groups (eg, PM-001, SE-101, & ILS-201).

A2.1.2.2 **CDRL Title** – This field identifies the title of the data item.

A2.1.2.3 **SOW Para Ref** – This field shows the paragraph in the SOW where the data item is stipulated. There may be multiple references to the data item in the SOW, but generally only the first (or one) reference is shown in the CDRL.

A2.1.2.4 **Version** – This field identifies the particular delivery of a data item during its lifecycle (ie, draft, final).

A2.1.2.5 **Delivery Schedule** – This field specifies the date(s) and/or events by which the data item is required to be delivered. The date of delivery applies to all delivery locations and quantities unless otherwise specified. Following are some of the abbreviations and symbols used with this column:

A2.1.2.5.1 'KO' means the Kick-Off Meeting date;

A2.1.2.5.2 Numerals indicate the number of Calendar Days, unless specified otherwise;

A2.1.2.5.3 '+' means after the specified date or event; and

A2.1.2.5.4 '-' means before the specified date or event.

A2.1.2.5.5 If a data item is required to be delivered before an event having a duration of greater than one day, delivery date must be calculated from the first day of that event. If a data item is required to be delivered after an event having a duration of greater than one day, the delivery date must be calculated from the last day of that event.

A2.1.2.6 **Quantity** – This field specifies the total number of data items to be delivered to the associated delivery location(s), including the number of hard (H) and soft (S) copies. When both hard and soft copies are requested, the action copy will be indicated in the notes column.

A2.1.2.7 **Addressee** – This field shows the short title of the DND representative to whom the hard and soft copies of the data items must be delivered. The action hard copy of the data item must be delivered to the first nominated location in this field.

A2.1.2.8 **Data Item Description Reference** – This field provides the identification of the DID with which the data item must comply.

A2.1.2.9 **DND Action Period** – This field defines the number of Calendar Days available to the DND to action the data item and respond to the Contractor, if that action requires a response.

A2.1.2.9.1 The period begins upon the date the action copy of the data item is received at the first nominated addressee.

A2.1.2.9.2 The action period applies to all deliveries, including first deliveries, amendments and re-issues. If a data item is delivered earlier than the first delivery date shown in the CDRL, the DND is not obliged to action it until after that date. If the action period states 'by MSR' for a data item delivered prior to a Mandated System Review (MSR), the action period ends when the minutes for that MSR are approved.

A2.1.2.10 **DND Action Required** – This field indicates the purpose for which the data item is being submitted to the DND, which will either be for Review, Approval or Acceptance.

A2.1.2.11 **Maintenance** – This field specifies either the timings or the time intervals, after each delivery, at which the data item must be reviewed by the Contractor and either have its continuing accuracy status confirmed in writing, or be updated and reissued. The Maintenance column does not apply to draft or preliminary versions of data items. The following abbreviations and codes are applicable to this column:

A2.1.2.11.1 xM – every x calendar months;

A2.1.2.11.2 R – to enable it to be considered at each MSR set out in the System Engineering program;

A2.1.2.11.3 SA – to enable it to be provided for the purposes of conducting Acceptance of each System;

A2.1.2.11.4 FA – to enable it to be provided for the purposes of Final Acceptance; and

A2.1.2.11.5 NA or blank – not applicable.

A2.1.2.12 Notes: Where necessary, additional explanatory information relating to a CDRL data item is provided in this column.

A2.2 CDRL Item List

CDRL #	CDRL Title	SOW Para Ref	Version	Delivery Schedule	Qty	Addressee	DID # and Ref	DND Action Period	DND Action Required	Maint	Notes
HELS-PM-001	Meeting Agenda	Para. 3.1.2.4.1 (pg. 9)	Draft	Meeting Date - 7	1S	CA, TA, PA	HELS-PM-001	5	Review		
			Revised	Meeting Date - 1	1S	CA, TA, PA	App. A3.3 (pg. 25)				
			Final	Meeting Date	1H	CA, TA, PA		7	Review or Acceptance		
HELS-PM-002	Meeting Minutes	Para. 3.1.2.4.2 (pg. 10)	Draft	Meeting Date + 7	1S	CA, TA, PA	HELS-PM-002	7	Review		
			Revised or Final	DND Comments + 7	1S	CA, TA, PA	App. A3.4 (pg. 27)	7	Review or Acceptance		

A3.0 APPENDIX: DATA ITEM DESCRIPTION

A3.1 Data Deliverable Format

A3.1.1 **Unless otherwise specified as a specific requirement, the Contractor must deliver all of the soft copies of data deliverables, in formats compatible with the office software currently in use by the DND as listed:**

A3.1.1.1 Microsoft (MS) Windows 10 Enterprise Operating System (OS);

A3.1.1.2 MS Edge 2019;

A3.1.1.3 MS Office Professional Plus 2013 (Word, Excel, Access, PowerPoint and Outlook); and

A3.1.1.4 Foxit PhantomPDF version 10;

A3.2 DID Table Definitions

The following section defines the various blocks of information found on the Data Item Description (DID) forms:

BLOCK 1 – TITLE
The title of the data item for the DID.

BLOCK 2 - IDENTIFICATION NUMBER
The Data Item Description (DID) number, consisting of a sequential three-digit number and prefixed with an abbreviation code, to uniquely identify the DID. Note that the 001-099 series is reserved to Program Management (PM) DIDs, the 101-199 series is reserved to Systems Engineering (SE) DIDs and the 201-299 series is reserved to Integrated Logistics Support (ILS) DIDs. The abbreviation codes used for the prefix are:

"PM" for Program Management
"SE" for Systems Engineering
"ILS" for Integrated Logistics Support

BLOCK 3 - DESCRIPTION
Provides a general description of the data content requirements.

BLOCK 4 – RELATED DOCUMENT(S)
Provides a listing of the related documents and specifications associated with and required to produce this DID.

BLOCK 5 - CONTRACT REFERENCE
The specific paragraph numbers from the Contract Statement of Work and CDRL to assist in identifying the work effort associated with the data item.

BLOCK 6 - PREPARATION INSTRUCTIONS
Provides the preparation instructions for the content and format requirements for the DID.

A3.3 **DID – Meeting Agenda**

DATA ITEM DESCRIPTION	
1. TITLE **Meeting Agenda**	2. IDENTIFICATION NUMBER **DID HELS-PM-001**
3. DESCRIPTION The Meeting Agenda contains the venue information and identifies the discussion items to be covered at meetings.	
4. RELATED DOCUMENTS	5. CONTRACT REFERENCE **SOW**: **Para. 3.1.2.4.1 (pg. 9)** **CDRL**: **App. A2.2 (pg. 23)**

6. PREPARATION INSTRUCTIONS

6.1. **CONTENT**

6.1.1. The Meeting Agenda must set forth the venue, identify all requirements and list the discussion items to be covered at the meeting.

6.1.2. Venue. The Meeting Agenda must address the venue as follows:

6.1.2.1. Meeting Identification Number;

6.1.2.2. Purpose;

6.1.2.3. Date, time and location; and

6.1.2.4. Attendees.

6.1.3. Discussion items. The Meeting Agenda must address the discussion items through the following sections:

6.1.3.1. Opening Remarks;

6.1.3.2. Agenda Review;

6.1.3.3. Review of Previous Minutes;

6.1.3.4. Opened Discussion Items;

6.1.3.5. New Discussion Items;

6.1.3.6. Review of Action Items;

6.1.3.7. Next Venue; and

6.1.3.8. Closing Remarks.

6.2. **HARD COPY FORMAT**

6.2.1. The Meeting Agenda must be printed on paper with these characteristics:

6.2.1.1. Weight of no less than 90 gsm;

6.2.1.2. Brightness of no less than 96 ISO brightness;

6.3. **SOFT COPY FORMAT**

6.3.1. The Meeting Agenda must be submitted as a PDF file type.

6.3.2. The Meeting Agenda PDF must be submitted via email (submission size not to exceed 7MB) as follows:

6.3.2.1. To Field: As per the related CDRL section 9.A. Addressee, as identified in the contract.

6.3.2.2. Subject Field: HELS-PM-001 – Meeting Agenda – [Rev #] – [Date of Issue]

A3.4 DID – Meeting Minutes

DATA ITEM DESCRIPTION	
1. TITLE **Meeting Minutes**	2. IDENTIFICATION NUMBER **DID HELS-PM-002**
3. DESCRIPTION The Meeting Minutes contains the detailed records of proceedings, discussions, decisions and action items from meetings.	
4. RELATED DOCUMENTS	5. CONTRACT REFERENCE **SOW**: **Para. 3.1.2.4.2 (pg. 10)** **CDRL**: **App. A2.2 (pg. 23)**

6. PREPARATION INSTRUCTIONS

6.1. **CONTENT**

6.1.1. The Meeting Minutes must contain the detailed records of proceedings, discussions, decisions and action items from the meeting and be presented through the following sections:

6.1.1.1. General – consisting of meeting identification number, purpose, date, time and location;

6.1.1.2. Attendees, consisting of the organization each person represents, and the identification of the Chairperson(s);

6.1.1.3. Opening Remarks;

6.1.1.4. **Action Item Report** - used to monitor issues, assign responsibility, direct action and track status, history, and progress, and must consisting of:

6.1.1.4.1. Item #; date initiated; required action; assigned actionee; target completion date; cross-reference to all related action items.

6.1.1.4.2. Action Item Report must be **updated** with each meeting and must consisting of:

6.1.1.4.2.1. Action Item current status and the actual date completed;

6.1.1.5. Next Venue;

6.1.1.6. Closing Remarks;

6.2. **SOFT COPY FORMAT**

6.2.1. The Meeting Minutes must be submitted as a PDF file type.

6.2.2. The Meeting Minutes PDF must be submitted via email (submission size not to exceed 7MB) as follows:

6.2.2.1. To Field: As per the related CDRL section 9.A. Addressee, as identified in the contract.

6.2.2.2. Subject Field: HELS-PM-002 – Meeting Minutes – [Rev #] – [Date of Issue]

A4.0 LOGISTICS FOR REPAIR AND OVERHAUL CONTRACTS

A4.1 GENERAL INTRODUCTION

A4.1.1 Aim

A4.1.1.1 This Logistic Statement of Work (LOG SOW) is distributed on the authority of the Assistant Deputy Minister (Material) (ADM (Mat)). It will be distributed, as required, internally to ADM (Mat) staff engaged in creating Repair and Overhaul (R&O) Contracts and Procurement Instruments (PI) and those who manage Repair and Overhaul Contracts.

A4.1.1.2 This is a common LOG SOW which will entail contract conditions for Repair and Overhaul contracts for:

A4.1.1.2.1 **In and Out of country:** For step by step instruction on in and out of country repair process refer to Annex B in the A-LM-184-001/JS-001. This model will describe the roles and responsibilities in the end to end repair process.

A4.1.1.2.2 **Major Equipment:** For complete instructions on receipt of Major Equipment, refer to Chapter 2 in the A-LM-184-001/JS-001.

A4.1.1.2.3 **Accountable Advance Spares** For complete instruction on AAS, refer to Chapter 8.2.7 in the A-LM-184-001/JS-001.

A4.1.1.3 This LOG SOW is to be read in conjunction with the A-LM-184-001/JS-001 for additional information. It is to be noted that there are Chapters that are mandatory when using the LOGSOW and must not be removed from the LOGSOW, if the contractor is managing Government Owned Materiel.

A4.1.1.4 It is to be noted that the LOG SOW is to be used primarily as a guide for R&O contracts. It is paramount that this LOG SOW be utilized with minimal changes for reasons of procurement standardization and departmental accountability. However, changes are permissible where there is a need to clarify specific requirements that would apply to equipment/weapon systems undergoing procurement and contract action.

A4.1.1.5 The following Chapters will be identified as mandatory or as applicable.

A4.1.1.6 It is important to understand the system of record (DRMIS) being used in DND and the various account structures in place. Contractors requiring access to DRMIS must obtain a PKI (Public Key Infrastructure) card in accordance with the recently implemented Two-Factor Authentication. All of this information is located in Chapter 1.1 of the A-LM-184-001/JS-001.

A4.1.2 EXTENT OF WORK/TYPES OF EQUIPMENT (Mandatory)

A4.1.2.1 Refer to Chapter 1.2 of A-LM-184-001/JS-001 for further information on the different types of DND Equipment that are authorized for repair and the category types.

A4.2 RECEIPT (Mandatory)

A4.2.1 Refer to Ch. 2.0 of the A-LM 184 for complete instruction on how to process receipts.

A4.2.2 **DISCREPANCIES IN SHIPMENTS (Mandatory)**

A4.2.2.1 The Contractor must action discrepancies in shipments in accordance with Chapter 2.1 of A-LM-184-001/JS-001.

A4.3 WORK CONTROL (Mandatory)

A4.3.1 The Contractor must ensure that the repair of all DND equipment is controlled by a serial numbered work order IAW Chap 3 of A-LM-184-001/JS-001.

A4.3.2 **COMPLETION OF WORK (Mandatory)**

A4.3.2.1 Refer to Chapter 3.1 of A-LM-184-001/JS-001.

A4.3.3 **STOP REPAIR ACTION (Mandatory)**

A4.3.3.1 The Contractor must comply immediately with all stop repair instructions. Detailed procedures are contained in Chapter 3.2 of A-LM-184-001/JS-001.

A4.4 ANNUAL REPAIR FORECAST – SNAPS (As applicable on an exceptional basis)

A4.4.1 Refer to Chapter 4 of the A-LM-184-001/JS-001 for more information.

A4.5 COST CONTROL (Mandatory)

A4.5.1 Refer to Chapter 5.0 of the A-LM-184-001/JS-001 for more information.

A4.6 COSTING RECORDS (Mandatory)

A4.6.1 The Contractor must prepare forms and maintain records IAW Chapter 6.0 of the A-LM-184-001/JS-001.

A4.6.2 **INVOICE/CLAIMS FOR PAYMENT (AAS SPARES) (As applicable)**

A4.6.2.1 The Contractor must submit monthly invoices for AA spare parts, IAW Chapter 6.1 of the A-LM-184-001/JS-001.

A4.7 MAINTENANCE SUPPORT-MINOR REPAIRS (Mandatory)

A4.7.1 Refer to Chapter 7.0 of the A-LM-184-001/JS-001 for more information.

A4.7.2 **MOBILE REPAIR PARTIES (MRPs) (As Applicable)**

A4.7.2.1 Refer to Chapter 7.1 of the A-LM-184-001/JS-001 for more information.

A4.7.3 **EQUIPMENT TURN AROUND TIME (TAT) (Mandatory)**

A4.7.3.1 Refer to Chapter 7.2 of the A-LM-184-001/JS-001 for more information.

A4.7.4 **PRIORITY REPAIR REQUEST (PRR) (Mandatory)**

A4.7.4.1 Refer to Chapter 7.3 of the A-LM-184-001/JS-001 for more information.

A4.7.5 **SPECIAL INVESTIGATIONS & TECHNICAL STUDIES (SITs) (As applicable)**

A4.7.5.1 Refer to Chapter 7.4 of the A-LM-184-001/JS-001 for more information.

A4.7.6 **TECHNICAL INVESTIGATIONS & ENGINEERING STUDIES (TIES) (As Applicable)**

A4.7.6.1 Refer to Chapter 7.5 of the A-LM-184-001/JS-001 for more information.

A4.7.7 **TERMINATION OF CONTRACT (Mandatory)**

A4.7.7.1 Refer to Chapter 7.6 of A-LM-184-001/JS-001.

A4.8 SUPPLY SUPPORT/SUSTAINMENT SUPPORT (Mandatory)

A4.8.1 **TRANSACTION DOCUMENTATION (Mandatory)**

A4.8.1.1 Refer to Chapter 8.1 of A-LM-184-001/JS-001 for more information.

A4.8.2 **CONTRACTOR SUPPLY ACCOUNTING (Mandatory)**

A4.8.2.1 Refer to Ch. 8.2 of A-LM-184-001/JS-001 for explanation of CRPA/CIS.

A4.8.2.2 CONTRACTOR ISSUE SPARES (CIS) MATERIEL RECEIVED OFF CONTRACT/PROCUREMENT (As Applicable)

A4.8.2.2.1 Refer to Chapter 8.2.3 of A-LM-184-001/JS-001 for more information.

A4.8.2.3 SHORTAGE OF CONTRACT ISSUE SPARES (CIS) (As Applicable)

A4.8.2.3.1 Refer to Section 8.2.4 of A-LM-184-001/JS-001 for more information.

A4.8.2.4 ORDERING/RECEIVING CATALOGUED CIS IN DRMIS (As Applicable)

A4.8.2.4.1 Refer to Section 8.2.5 of A-LM-184-001/JS-001 for more information.

A4.8.2.5 GOVERNMENT FURNISHED OVERHAUL SPARES (GFOS) (As Applicable)

A4.8.2.5.1 Refer to Section 8.2.6 of A-LM-184-001/JS-001 for further explanation and detail.

A4.8.2.6 ACCOUNTABLE ADVANCE SPARES (AAS) (As Applicable)

A4.8.2.6.1 Refer to Section 8.2.7 of A-LM-184-001/JS-001 for further explanation and detail.

A4.8.3 **MANAGEMENT OF DND-OWNED SPARES (As Applicable)**

A4.8.3.1 Refer to Chapter 8.3.1 of A-LM-184-001/JS-001 for more information.

A4.8.4 **SPARES REVIEW (As applicable)**

A4.8.4.1 Refer to Chapter 8.4 of A-LM-184-001/JS-001 for more information.

A4.8.4.2 LOAN OF GOVERNMENT FURNISHED INFORMATION/ GOVERNMENT FURNISHED EQUIPMENT (GFI/GFE) (As Applicable)

A4.8.4.2.1 Refer to Section 8.4.1 of A-LM-184-001/JS-001 for further explanation and detail.

A4.8.5 **STOCKTAKING (Mandatory)**

A4.8.5.1 Refer to Section 8.5 of A-LM-184-001/JS-001 for further explanation and detail.

A4.8.6 **SELECTION NOTICE OBSERVATION MESSAGE (SNOM) (Mandatory)**

A4.8.6.1 Refer to Chapter 8.6 of A-LM-184-001/JS-001.

A4.8.7 **EMBODIMENT FEES (As Applicable)**

A4.8.7.1 Refer to section 8.7 of A-LM-184-001/JS-001 for further explanation and detail.

A4.8.8 **LOSS OR DAMAGE TO DND MATERIEL (Mandatory)**

A4.8.8.1 Refer to section 8.8 of A-LM-184-001/JS-001 for further explanation and detail.

A4.8.9 **SCRAP - CUSTODY & DISPOSAL (Mandatory)**

A4.8.9.1 Refer to section 8.9 of A-LM-184-001/JS-001 for further explanation and detail.

A4.8.10 **PACKAGING (Mandatory)**

A4.8.10.1 Refer to section 8.10 of A-LM-184-001/JS-001 for further explanation and detail.

A4.8.11 **REUSABLE CONTAINER (As Applicable)**

A4.8.11.1 Refer to Chapter 8.11 of the A-LM-184-001/JS-001 for more information.

A4.8.12 **TRANSPORTATION/SHIPMENT IDENTIFICATION/MODE OF SHIPMENT/LOSS OR DAMAGE IN TRANSIT/ GENERAL CLAIMS PROCEDURES (Mandatory)**

A4.8.12.1 Refer to Chapter 8.12 of the A-LM-184-001/JS-001 for more information.

A4.9 WARRANTY CONSIDERATION (Mandatory)

A4.9.1 Refer to Chapter 9.0 of the A-LM-184-001/JS-001 for more information.

A4.10 CONTRACTOR USE OF DND EQUIPMENT/PUBLICATIONS (As Applicable)

A4.10.1 Refer to Chapter 10.0 of the A-LM-184-001/JS-001 for more information.

A4.11 PUBLICATIONS (As Applicable)

A4.11.1 Refer to Chapter 11 of A-LM-184-001/JS-001 for more information.

A4.12 OFFICE SERVICES (As Applicable)

A4.12.1 Refer to Ch. 12 of A-LM-184-001/JS-001 for further explanation.

A4.13 MINUTES OF MEETINGS (Mandatory)

A4.13.1 Refer to Ch. 13 of A-LM-184-001/JS-001 for further explanation.

A4.14 PLANT SHUTDOWN/VACATION PERIOD (Mandatory)

A4.14.1 Refer to Ch. 14 of A-LM-184-001/JS-001 for further explanation.

A4.15 REPORTS (Mandatory)

A4.15.1 Refer to Ch. 15 of A-LM-184-001/JS-001 for a complete list of reports available to contractors.

ANNEX C

FINANCIAL COSTING

HIGH ENERGY LASER SYSTEM

PART ONE - ACQUISITION FINANCIAL COSTING TABLE

MANDATORY COMPLETION OF EACH PRICE "BOX". IF THERE IS NO COST PLEASE INSERT "0" or Nil.

Item #	Item Description	Qty	Unit price	Total price
1	HELS (para. A1.0)	2		
2	Contract Master Schedule (para. 3.2.1)	1		
3	Contract Status Report (para. 3.3.1)	LOT		
4	Kick-off Meeting (para. 3.4.2)	1		
	Meeting Agenda (para. 3.4.5.1.1)			
	Meeting Minutes (para. 3.4.5.1.2)			
5	ILS Meeting (para. 3.4.3)	1		
	Meeting Agenda (para. 3.4.5.1.1)			
	Meeting Minutes (para. 3.4.5.1.2)			
6A	Operator Manual - English (para. 4.3.1.1)	LOT		
6B	Operator Manual - Bilingual (para. 4.3.1.1)			
7A	Repair Manual - English (para. 4.3.1.2.1)	LOT		
7B	Repair Manual - Bilingual (para. 4.3.1.2.1)			
8A	Installation Instructions - English (para. 4.3.1.3.1)	LOT		
8B	Installation Instructions - Bilingual (para. 4.3.1.3.1)			
9	Illustrated Parts Manual (para. 4.3.1.4.1)	1		
10A	Operator Training Package - English (para. 4.3.1.5.1)	LOT		
10B	Operator Training Package - Bilingual (para. 4.3.1.5.1)			
11A	Preservation, Storage and Reactivation Instructions - English (para. 4.3.1.6.1)	1		
11B	Preservation, Storage and Reactivation Instructions - Bilingual (para. 4.3.1.6.1)			
12A	Stowage, Shipping and Handling Instructions - English (para. 4.3.1.7.1)	1		
12B	Stowage, Shipping and Handling Instructions - Bilingual (para. 4.3.1.7.1)			
13	Provisioning Parts Breakdown (para. 4.4.3.1.1)	1		
14	Supplementary Provisioning Technical Documentation (para. 4.4.3.2.1)	1		
15	Special Tools & Test Equipment List (para. 4.4.3.3.1)	1		
16	Materiel Identification Data Set (4.4.3.4.1)	1		
17	Identification Plates (para. 4.5.1)	LOT		
18	Controlled & Non-Controlled Goods List (para. 4.6.1)	1		

19	Identification Labels for Storage & Shipment and Packaging Codes (para. 4.7.3)	1		
20	List of Items to be Supported (para. 4.8.1)	1		
21	Operator Training Session (para. 4.9.2)	Training Location:		
		CFB Gagetown	1	
22	Equipment Environmental Assessment (para. 5.4.1)	1		
			Subtotal	$ -
Please indicate to which lines items GST/HST is applied, if not to all			**GST/HST**	$ -
			Total	$ -
Note 1:	'LOT' equates to a varied quantity needed to fulfill the requirements of the CDRL.			

Optional Requirements:

Item #	Item Description	Qty	Unit price	Total price
23	HELS (para. A1.0), **up to 2 additional units**, including Operator Manual, Repair Manual and Installation Instructions	2	$ -	$ -
24	Spare Parts for two (2) years of usage – (assumptions are expected) user maintenance follows the Maintenance Concept para. 4.1, supported by Contractor R&O which should not be costed here.	-	-	$ -

PART TWO - IN-SERVICE SUPPORT FINANCIAL COSTING TABLE

Bidders' Instructions

Note 1	Based on the requirements in Annex B Support SOW and the information provided in the tables below for the various activity scenarios, **Bidders must fill in firm years only, and the other white cells in the tables below.**
Note 2	Bidders must list all labour categories that may be required to completed the work. Other* Labour Categories that are not already listed may be added. The bidder must clearly describe which labour category they are proposing.
Note 3	Work Load % is an estimate and will only be used for costing purposes, these hours do not represent any intended or potential final contract value.
Note 4	Option Years would be negotiated at the time in a future contract.

Table One - Labour Categories - In-Service Support

Bidders must provide labour rates for the labour categories that it considers necessary to complete the work. Those categories not used can be left blank, or if required, additional labour categories can be added.

These rates will be used to calculate prices for the various tasks and activities directed or approved by DND, under the Support SOW, and used as fixed annual values in the Support Contract.

Labour Categories will be grouped into Administrative and Technical, and used in Table Two.

Labour Category	Bid Currency used		Firm Years (Hourly Rate)			Option Years (Hourly Rate) (to be negotiated - Note 4)						
			YEAR 1	YEAR 2	YEAR 3	YEAR 4	YEAR 5	YEAR 6	YEAR 7	YEAR 8	YEAR 9	YEAR 10
Project Manager		Hourly Rate/ Labour Category →										
Administration												
Engineer												
Technician												
Technologist												
Logistician												
Draftsperson/Illustrator												
Other*												
Other*												
Other*												

Table Two - ANNEX B - SUPPORT SOW - 3.0 R&O Activities (Pre-Authorized R&O)

Repair & Overhaul Activities	Details	Labour Category Group Estimated Workload			Firm Years (Workload x Avg. Rate x Percentage)			Option Years (Workload x Avg. Rate x Percentage) (to be negotiated - Note 4)						
		Labour Category Group	Average Hourly Rate	Workload percentage	YEAR 1	YEAR 2	YEAR 3	YEAR 4	YEAR 5	YEAR 6	YEAR 7	YEAR 8	YEAR 9	YEAR 10
R&O hourly work	*In the cell provided, Bidders must indicate what labour categories were used from each labour category group (Administrative and Techincal), as per Table One. **As the bidder is requested to propose their own labour categories as per Table One, only the average hourly rates for Administrative and Technical will be calculated and used for costing purposes. Bidders are requested to provide only one hourly rate per Labour Category Group. Example: If the bidder inputs Project Manager ($10.00/h) and Administration ($20.00/h) under the Labour Gategory Group Administrative, Project Manager plus Administration equals $30.00/h divided in 2, gives an average hourly rate of $15.00/h. For the R&O hourly work described in the Support SOW, the following is the overall estimated workload per year: Year 1 – Estimated Workload to be 200 hours Year 2 – Estimated Workload to be 200 hours Year 3 – Estimated Workload to be 200 hours	**Administrative** (Must Indicate what categories were used - Example - Project Manager, Administration, Other, etc.)		30% of overall hours										
		Technical (Must Indicate what categories were used - Example - Engineer, Technician, Other, etc.)		70% of overall hours										
		Mark-up/Overhead rate			%	%	%	%	%	%	%	%	%	%

		Sub-Total Cost →	$ -	$ -	$ -	$ -	$ -	$ -	$ -	$ -	$ -	$ -

Table Three - R&O Spares Provisioning

Repair & Overhaul Activities	Details		Firm Years (OEM Spares with Mark-up)			Option Years (OEM Spares with Mark-up) (to be negotiated - Note 4)						
			YEAR 1	YEAR 2	YEAR 3	YEAR 4	YEAR 5	YEAR 6	YEAR 7	YEAR 8	YEAR 9	YEAR 10
R&O Spares Provisioning	For R&O spares provisioning described in the Support SOW, the following is the overall estimated OEM spares required per year. Provide the cost of these spares to Canada, specifically including the Contractor's price markup (if any) on the OEM spares. Price of Spares are for evaluation purposes only and does not represent any intended or potential final price of spares. Example: if the Mark up is 5% the sub-total Cost would be Spares x 1.05 = $21,000		$50,000	$50,000	$50,000							
		Mark-Up, Parts Procurement (%)	%	%	%	%	%	%	%	%	%	%
		Sub-Total Cost →	$ -	$ -	$ -	$ -	$ -	$ -	$ -	$ -	$ -	$ -

SUPPORT SOW R&O Activities - Subtotal	$ -	$ -	$ -	$ -	$ -	$ -	$ -	$ -	$ -	$ -
GST/HST										
Total Annual Value	$ -	$ -	$ -	$ -	$ -	$ -	$ -	$ -	$ -	$ -
TOTAL FOR ALL FIRM YEARS OF IN-SERVICE SUPPORT (Table 2 +3)	$ -									

ANNEX A

STATEMENT OF WORK

FOR THE

MINI UNMANNED AERIAL SYSTEM

TABLE OF CONTENTS

1.0 SCOPE

1.1 Purpose

1.1.1 The purpose of this Statement of Work (SOW) is to define the work requirements for the Mini Unmanned Aerial System (MUAS), for improving our situational awareness by conducting rapid reconnaissance.

1.2 Intended Use

1.2.1

1.3 Acronyms and Abbreviations

CA	Contracting Authority
CAF	Canadian Armed Forces
CDRL	Contract Data Requirements List
CFB	Canadian Forces Base
CFSD	Canadian Forces Supply Depot
CFTO	Canadian Forces Technical Order
CMS	Contract Master Schedule
CNCGL	Controlled & Non-Controlled Goods List
CSR	Contract Status Report
DID	Data Item Description
DMC	Demilitarization Code
DND	Department of National Defence
DPA	Defence Product Act
ECL	Export Control List
ECCN	Export Control Classification Number
EEA	Equipment Environmental Assessment
IAW	In Accordance With
ILS	Integrated Logistics Support
ILSM	Integrated Logistics Support Manager
IP	Intellectual Property
ISO	International Organization for Standardization
ITAR	International Traffic in Arms Regulations
LIS	List of Items to be Supported
MIDS	Material Identification Data Set
MUAS	Mini Unmanned Aerial System
MUAV	Mini Unmanned Aerial Vehicle
MRC	Maximum Repair Cost

NATO	North Atlantic Treaty Organization
NCAGE	NATO Commercial and Government Entity
NDID	National Defence Index of Documentation
NSN	NATO Stock Number
OEM	Original Equipment Manufacturer
OQRC	Operator Quick Reference Card
PA	Procurement Authority
PPB	Provisioning Parts Breakdown
PSPC	Public Service and Procurement Canada
R&O	Repair & Overhaul
RCE	Repair Cost Estimate
SDS	Safety Data Sheet
SOW	Statement of Work
SPTD	Supplementary Provisioning Technical Documentation
STTE	Special Tools and Test Equipment
TA	Technical Authority
UID	Unique Identification
USML	United States Munitions List

2.0 APPLICABLE DOCUMENTS

2.1 References

2.1.1 Whereas mentioned, the following Standards must be used for the preparation of deliverables to the extent specified in this SOW.

GOVERNMENT FURNISHED INFORMATION

REFERENCE NUMBER	PROMULGATION DATE	REFERENCE TITLE
C-01-100-100/AG-008	2018-08-01	POLICY/MANAGEMENT PROCEDURES AND GUIDELINES SPECIFICATION WRITER'S GUIDE FOR TECHNICAL DOCUMENTATION
C-02-007-000/AG-001	2016-01-01	CONTROLLED TECHNOLOGY ACCESS AND TRANSFER (CTAT) MANUAL
C-55-040-001TS-002	2016-10-20	RADIO FREQUENCY SAFETY STANDARDS AND REQUIREMENTS
D-01-100-204/SF-000	2018-08-31	PREPARATION OF PREVENTIVE MAINTENANCE INSTRUCTIONS
D-01-100-205/SF-000	2000-10-31	SPECIFICATION – PREPARATION OF CORRECTIVE MAINTENANCE INSTRUCTION
D-01-100-207/SF-002	1996-07-12	SPECIFICATION – PREPARATION OF INTERIM ILLUSTRATED PARTS MANUALS FOR LAND EQUIPMENTS
D-01-100-211/SF-000	1988-12-07	SPECIFICATION – PRESERVATION, STORAGE AND HANDLING INSTRUCTION
D-01-100-214/SF-000	2020-09-30	CANADIAN FORCES SPECIFICATIONS – PREPARATION OF PROVISIONING DOCUMENTATION FOR CANADIAN ARMED FORCES EQUIPMENT
D-01-400-001/SG-000	2021-09-30	STANDARD – ENGINEERING DRAWING PRACTICES
D-01-400-002/SF-000	2018-07-31	CANADIAN FORCES SPECIFICATIONS – LEVELS OF ENGINEERING DRAWINGS
D-02-002-001/SG-001	2021-06-30	CANADIAN FORCES STANDARD – IDENTIFICATION MARKING OF DEPARTMENT OF NATIONAL DEFENCE MATERIEL
D-LM-008-001/SF-001	1986-06-30	METHODS OF PACKAGING
D-LM-008-002/SF-001	1991-08-01	SPECIFICATION FOR MARKING FOR STORAGE AND SHIPMENT
D-LM-008-011/SF-001	1988-11-10	PREPARATION AND USE OF PACKAGING REQUIREMENTS CODES
D-LM-008-036/SF-000	2020-09-30	CANADIAN FORCES SPECIFICATIONS – DEPARTMENT OF NATIONAL DEFENCE MINIMUM REQUIREMENTS FOR COMMERCIAL PACKAGING

COMMERCIALLY AVAILABLE

REFERENCE NUMBER	PROMULGATION DATE	REFERENCE TITLE
AMS-STD-595	LATEST EDITION	COLORS USED IN GOVERNMENT PROCUREMENT
DAOD 3026-0	2012-05-04	RADIO FREQUENCY SAFETY
DAOD 3026-1	2012-05-04	RADIO FREQUENCY SAFETY PROGRAM
NEMA IEC 60529	N/A	DEGREES OF PROTECTION PROVIDED BY ENCLOSURES - IP CODE
R.S.C., 1985, C. H-3	1985	HAZARDOUS PRODUCTS ACT
SOR/2003-289		FEDERAL HALOCARBON REGULATIONS
SOR/2008-273		PCB REGULATIONS
SOR/2012-285		PROHIBITION OF CERTAIN TOXIC SUBSTANCES REGULATIONS
SOR/2014-254		PRODUCTS CONTAINING MERCURY REGULATIONS
SOR/2016-137		OZONE-DEPLETING SUBSTANCES AND HALOCARBON ALTERNATIVES REGULATIONS
SOR/2018-196		PROHIBITION OF ASBESTOS AND PRODUCTS CONTAINING ASBESTOS REGULATIONS
STANAG 2290 ED. 2	18 NOV 2010	NATO UNIQUE IDENTIFICATION OF ITEMS

2.2 Order of Precedence

2.2.1 In the event of conflict between the content in this SOW and the referenced documents, the content of this SOW will take precedence.

3.0 PROJECT MANAGEMENT

3.1 Project Manager

3.1.1 The Contractor must designate a Project Manager with the responsibilities to coordinate, execute, and manage the Contractor's project management activities for the Contract. The Contractor's Project Manager must have the total responsibility for all works required under the Contract.

3.1.2 The Contractor's Project Manager must be the primary point of contact between the Contractor, the DND Technical Authority (TA), and the PSPC Contracting Authority for all issues related to the Contract.

3.2 Contract Master Schedule

3.2.1 The Contractor must provide a Contract Master Schedule (CMS) IAW Contract Data Requirement List (CDRL) MUAS-PM-001 at Appendix A2.2 (page 29) to ANNEX A and its associated Data Item Deliverable (DID) MUAS-PM-001 at Appendix A3.3 (page 36) to ANNEX A.

3.2.2 The Contractor must use the approved CMS as the primary schedule for managing the project.

3.2.3 The Contractor may amend the approved CMS, without first obtaining the TA's and Contracting Authority's approval, as long as:

3.2.3.1 Payments under the contract are not affected;

3.2.3.2 The milestones dates are not affected; and

3.2.3.3 The ability of Canada to meet its obligations under the contract is not affected.

3.3 Contract Status Report

3.3.1 The Contractor must provide a Contract Status Report (CSR) IAW CDRL MUAS-PM-002 at Appendix A2.2 (page 29) to ANNEX A and its associated DID MUAS-PM-002 at Appendix A3.4 (page 38) to ANNEX A.

3.4 Project Meetings

3.4.1 Meeting Organization and Coordination

3.4.1.1 The Contractor's Project Manager must be present at the Kick-off Meeting, and at other meetings when requested by Canada. If the Project Manager does not have final approval authority for decision making and changes, then the person that has that final approval authority must also be present.

3.4.2 Kick-off Meeting

3.4.2.1 The Contractor must hold and chair a Kick-off Meeting (at the Contractor's facility) no later than 21 calendar days after contract award to review and secure a common understanding of the following:

3.4.2.1.1 The requirements of the Contract;

3.4.2.1.2 The requirements of the SOW;

3.4.2.1.3 General overview of the project, risks, schedule and communication channels to follow, and

3.4.2.1.4 Other contractual and programmatic issues associated with the project as agreed between the TA, CA and the Contractor.

3.4.2.2 Refer to Meeting Documentation requirements found at ANNEX A para. 3.4.5.

3.4.3 Integrated Logistics Support (ILS) Meeting

3.4.3.1 The Contractor must hold and chair an ILS Meeting following the closure of the Kick-Off Meeting (see 3.4.2), in order to:

3.4.3.1.1 Review and secure a common understanding of the requirements expressed in the ILS CDRLs and DIDs, DND Canadian Forces Technical Orders (CFTO)s and specifications; and,

3.4.3.1.2 Discuss possible sparing strategies and concepts, lowest replaceable units, and lines of maintenance.

3.4.3.2 Refer to Meeting Documentation requirements found at ANNEX A para. 3.4.5.

3.4.4 Other meetings

3.4.4.1 The Contractor and the TA may schedule informal reviews, such as teleconferences, video conferences, briefings and technical interchange meetings, to help achieve the requirements of the Contract.

3.4.5 Meeting Documentation

3.4.5.1 The Contractor must prepare and deliver a meeting agenda for all formal meetings and conferences, and prepare and deliver the meeting minutes afterwards.

3.4.5.1.1 The Contractor must provide the Meeting Agenda(s) IAW CDRL MUAS-PM-003 at Appendix A2.2 (page 29) to ANNEX A and its associated DID MUAS-PM-003 at Appendix A3.5 (page 39) to ANNEX A.

3.4.5.1.2 The Contractor must record, prepare, and provide the Meeting Minutes of each meeting IAW CDRL MUAS-PM-004 at Appendix A2.2 (page 29) to ANNEX A and its associated DID MUAS-PM-004 at Appendix A3.6 (page 40) to ANNEX A.

3.4.5.2 No change in the interpretation of the SOW, Technical Specification, cost, and schedule, as defined in the Contract, may be authorized by the minutes of a meeting. Such changes will require formal contract amendment by the CA.

4.0 INTEGRATED LOGISTICS SUPPORT (ILS)

4.1 Maintenance Concept

4.1.1 The MUAS will be maintainable by CAF operators and technicians in a field environment as prescribed for each item of equipment:

4.1.1.1 **Operator Maintenance** – consisting of maintenance that will not require Special Tools and Test Equipment (STTE) to complete, as well as equipment cleaning. Task duration generally less than one (1) hour.

4.1.1.2 **Technician Maintenance, First Line** – consisting of preventive and minor corrective maintenance tasks by repair or replacement of parts, and could require STTE to complete this maintenance. Task duration generally less than four (4) hours.

4.1.2 The more in-depth maintenance tasks, consisting of corrective maintenance tasks, reconditioning of assemblies and component rebuilds, will be done through the Support Contract.

4.2 Instruments, Decals, Data Plates and Warnings

4.2.1 The Contractor must deliver all instruments, decals and data plates marked in metric units.

4.2.2 Where international symbols are not possible, the Contractor must provide bilingual markings in English and Canadian French, as per paragraph 4.4.7.

4.2.3 The Contractor must provide warning and precautionary data plates in both official languages of Canada (English and Canadian French) in order to protect personnel and equipment, as per paragraph 4.4.7.

4.3 Access to the Radiofrequency Spectrum

4.3.1 The Contractor must ensure that Radio Frequency equipment, systems, sub-systems, Configuration Items, and end products are certified by Innovation, Science and Economic Development Canada or meet Spectrum Supportability.

4.3.2 For MUAS Radio Frequency components (transmitting and receiving), the Contractor must provide the Application for Spectrum Supportability IAW CDRL MUAS-ILS-201 at Appendix A2.2 (page 29) to Annex A, and its associated DID MUAS-ILS-201 at Appendix A3.7 (page 41) to this ANNEX A.

4.3.2.1 Spectrum Supportability is granted when Radio Frequency equipment is found to be in conformity with National Spectrum Policy and Standards to ensure compatibility with existing Radio Frequency equipment, both military and civilian, currently operating in the same frequency band.

4.3.2.2 DND policy, standards, and organization for spectrum management and instructions for obtaining frequency supportability and licensing can be found in B-GT-D35-001/AG-000 (DNDP 35) Management of the Radio Frequency Spectrum. National Spectrum Policy and Standards can be found on Innovation, Science and Economic Development Canada's website (http://www.ic.gc.ca) at: http://www.ic.gc.ca/eic/site/smt-gst.nsf/eng/h_sf01841.html.

4.4 Technical Publication Package

4.4.1 The Contractor must prepare and deliver the following Technical Publications:

4.4.1.1 Operator Manual

4.4.1.1.1 The Contractor must provide an Operator Manual IAW CDRL MUAS-ILS-202 at Appendix A2.2 (page 29) and its associated DID MUAS-ILS-202 at Appendix A3.8 (page 62) to this ANNEX A.

4.4.1.2 Operator Quick Reference Card

4.4.1.2.1 The Contractor must provide an Operator Quick Reference Card IAW CDRL MUAS-ILS-203 at Appendix A2.2 (page 29) and its associated DID MUAS-ILS-203 at Appendix A3.9 (page 64) to ANNEX A.

4.4.1.3 Maintenance and Parts Handbook

4.4.1.3.1 The Contractor must provide a Maintenance and Parts Handbook IAW CDRL MUAS-ILS-204 at Appendix A2.2 (page 29) and its associated DID MUAS-ILS-204 at Appendix A3.10 (page 66) to ANNEX A.

4.4.1.4 Operator Training Package

4.4.1.4.1 The Contractor must provide an Operator Training Package IAW CDRL MUAS-ILS-205 at Appendix A2.2 (page 29) and its associated DID MUAS-ILS-205 at Appendix A3.11 (page 68) to ANNEX A.

4.4.1.4.2 The Operator Training Package must be oriented to Train-the-Trainer.

4.4.1.5 Preservation, Storage and Reactivation Instructions

4.4.1.5.1 The Contractor must provide a Preservation, Storage and Reactivation Instructions IAW CDRL MUAS-ILS-206 at Appendix A2.2 (page 29) and its associated DID MUAS-ILS-206 at Appendix A3.12 (page 70) to ANNEX A.

4.4.2 No Contractor or sub-contractor logo, name, trademark, or other wording or device that may be interpreted as advertising must appear in any of the Technical Publications, except for incidental instances in photos for the purpose of instruction.

4.4.3 The Contractor must provide a completed DND590 Certificate of Validation for every accepted first-language Technical Publication listed in 4.4.1.

4.4.4 Front Matter

4.4.4.1 The Contractor must include the following in each Technical Publication (except in the Operator Quick Reference Card):

4.4.4.1.1 A cover page (a template will be provided by the Integrated Logistics Support Manager (ILSM)) showing the date the publication was issued and the model/system designation;

4.4.4.1.2 A List of Effective Pages;

4.4.4.1.3 A Revision Control Table;

4.4.4.1.4 A detailed Table of Contents and List of Figures & Tables; and

4.4.4.1.5 An Acronyms and Abbreviations table

4.4.5 Supplementary Information

4.4.5.1 The Contractor must provide supplementary information, in the portions of text that require it, with one or more of the following notices, in the order listed:

4.4.5.1.1 **Danger.** The danger advisory will be used to draw attention to an extreme, violent and continuous hazard to life;

4.4.5.1.2 **Warning.** The warning advisory will be used to emphasize an operating or maintenance procedure, practice, condition, statement, which if not strictly observed, could result in injury to or death of personnel;

4.4.5.1.3 **Caution.** The caution advisory will be used to emphasize an operating or maintenance procedure, practice, condition, statement, which if not strictly observed, could result in maintenance, damage to or destruction of equipment, loss of mission effectiveness or long-term health hazards to personnel;

4.4.5.1.4 **Note.** The note will be used to point out a procedure, event or practice that it is desirable to highlight; and,

4.4.5.1.5 **Example.** The example will be used when required to clarify the preceding text.

4.4.6 Notice - Intellectual Property Rights

4.4.6.1 **For deliverables that contain only Foreground Information**, the Contractor must include a notice of Intellectual Property Rights in or on each deliverable. The Contractor must record that Canada has licensed Intellectual Property Rights as per Contract No. XXXXX, and must state that the deliverable contains no Background Information, and will identify the Contractor (if applicable) and each applicable grantor to the Contractor of those rights in the Foreground Information.

4.4.6.2 **For deliverables that contain only Background Information**, the Contractor must include a notice of Intellectual Property Rights in or on each deliverable. The Contractor must record that Canada has licensed Intellectual Property Rights as per Contract No. XXXXX, and must state that the deliverable contains only Background Information, and will identify the Contractor (if applicable) and each applicable grantor to the Contractor of those rights in the Background Information.

4.4.6.3 **For deliverables that consist of Background Information and Foreground Information**, the Contractor must include a notice of Intellectual Property Rights in or on each deliverable, such that the Foreground Information and the Background Information may be distinguished from each other. The Contractor must record that Canada has licensed Intellectual Property Rights as per Contract No. XXXXX, and must identify the Contractor (if applicable) and each

applicable grantor to the Contractor of those rights in the Background Information and in the Foreground Information.

4.4.7 Official Language Requirements

4.4.7.1 The Contractor must deliver all Technical Publications in English and Canadian French.

4.4.7.2 The Contractor must have all Technical Publications translated by certified translators, such as members of an authorized provincial association of translators, to ensure the quality of translated text.

4.4.7.3 In bilingual publications, the Contractor must use the same images within the French and English versions, except for any software-based images (such as screenshots) if that software's language can be selected between English and French. In such a case, the Contractor must use the software-based images in the language of the text they supplement.

4.4.7.4 The Contractor must ensure all translations are consistent with approved DND terminology. Approved terminology sources, in order of priority, are as follows:

4.4.7.4.1 Canadian Oxford Dictionary Second Edition (for English);

4.4.7.4.2 Le Petit Robert Edition 2017 (for French); and

4.4.7.4.3 Termium, PSPC Translation Bureau Linguistic Data Bank (http://www.termiumplus.gc.ca/);

4.4.7.4.4 International Electrotechnical Vocabulary (http://electropedia.org)

4.4.7.5 The Contractor must review and accept responsibility for the validity of all (both their own and all sub-Contractors) information found in the Technical Publications.

4.4.7.6 The Contractor must provide, to the DND ILSM for approval, a completed DND2515 Translation Accuracy Check form for every accepted second-language Technical Publication listed in 4.4.1 of Annex A1.

4.5 Provisioning Documentation

4.5.1 The Provisioning Documentation (PD) lists and describes in detail the parts that make up the MUAS as well as all specialized and specific items required to support the use and maintenance of the MUAS. The PD allows the MUAS's Integrated Logistics Support Manager (ILSM) to plan and implement a sparing and support strategy.

4.5.2 Included in the PD are all the procurable parts — either from the Contractor or a third-party — of the MUAS to the lowest replaceable unit. Also considered procurable parts are the consumables required to operate the MUAS and specialized equipment (special tools, training aids, transport containers, etc.) specific to the MUAS.

4.5.3 The Contractor must prepare and deliver the following Provisioning Documentation:

4.5.3.1 Provisioning Parts Breakdown

4.5.3.1.1 The Contractor must provide a Provisioning Parts Breakdown IAW CDRL MUAS-ILS-207 at Appendix A2.2 (page 29) and its associated DID MUAS-ILS-207 at Appendix A3.13 (page 72) to this ANNEX A.

4.5.3.2 Supplementary Provisioning Technical Documentation

4.5.3.2.1 The Contractor must provide Supplementary Provisioning Technical Documentation IAW CDRL MUAS-ILS-208 at Appendix A2.2 (page 29) and its associated DID MUAS-ILS-208 at Appendix A3.14 (page 74) to this ANNEX A.

4.5.3.3 Materiel Identification Data Set

4.5.3.3.1 The Contractor must provide a Materiel Identification Data Set (MIDS) IAW CDRL MUAS-ILS-209 at Appendix A2.2 (page 29) to Annex A, and its associated DID MUAS-ILS-209 at Appendix A3.15 (page 75) to this ANNEX A.

4.6 Identification Plates

4.6.1 The Contractor must provide Identification Plates – Design Template & Populated Designs IAW CDRL MUAS-ILS-210 at Appendix A2.2 (page 29) and its associated DID MUAS-ILS-210 at Appendix A3.16 (page 76) to this ANNEX A.

4.6.2 The Contractor must attach Identification Plates to the following components for ease of tracking within the Canadian Forces Supply System:

4.6.2.1 Prime Equipment;

4.6.2.2 Major Spares;

4.6.2.3 STTE;

4.6.2.4 Training Equipment;

4.6.2.5 Transportation, Shipping, Storage Containers that are not single-use;

4.6.2.6 Support Equipment (excluding common tools), and

4.6.2.7 Automatic Test Equipment.

4.6.3 Unique Identification (UID) is the allocation of a unique number to an individual item using a standard procedure which is globally accepted. UID makes it possible to store and exchange data on an item's usage and maintenance history using national and international systems. UID can be used in the logistics chain to track and trace materiel more effectively. Implementing UID-marking will lead to the optimization of the logistical footprint.

4.6.4 The Contractor must generate and affix Unique Item Identifier(s), in accordance with STANAG 2290 Edition 2 - NATO UNIQUE IDENTIFICATION OF ITEMS, on the

Identification Plates of the following serially managed items, and be of such quality as to remain machine readable for the expected life of the item:

4.6.4.1 Mini Unmanned Aerial Vehicle (see A1.1.1.2.1)

4.6.4.2 Control and Communication System (see A1.1.1.2.2)

4.7 Controlled & Non-Controlled Goods List

4.7.1 The Contractor must provide the Controlled & Non-Controlled Goods List with the Demilitarization Code (DMC) IAW MUAS-ILS-211 at Appendix A2.2 (page 29) and its associated DID MUAS-ILS-211 at Appendix A3.17 (page 78) to this ANNEX A.

4.8 Identification Labels for Storage & Shipment and Packaging Codes

4.8.1 The Contractor must supply all parts and equipment, packaged and packed as per D-LM-008-001/SF-001 following

4.8.1.1 Level C Minimum Military Package;

4.8.1.2 Level C Minimum Military Pack;

4.8.2 The Contractor must label all packaging, produced under 4.8.1 above, as per D-LM-008-002/SF-001, using D-LM-008-011/SF-001 to prepare the required codes for packaging and preservation.

4.8.3 The Contractor must provide Identification Labels for Storage & Shipment and Packaging Codes IAW CDRL MUAS-ILS-212 at Appendix A2.2 (page 29) to Annex A, and its associated DID MUAS-ILS-212 at Appendix A3.18 (page 80) to this ANNEX A.

4.8.4 For serially managed items, the Contractor must apply the Unique Item Identifier(s), in a machine readable form, to the outside of any package of uniquely identified materiel where the UID data matrix is not easily machine-readable through the packaging material.

4.8.4.1 The Unique Item Identifier and its component data elements are to be replicated in a PDF 417 barcode in accordance with STANAG 2290 (Edition 2).

4.9 List of Items to be Supported (for Support SOW)

4.9.1 The Contractor must provide a List of Items to be Supported IAW CDRL MUAS-ILS-213 at Appendix A2.2 (page 29) to Annex A, and its associated DID MUAS-ILS-213 at Appendix A3.19 (page 82) to this ANNEX A.

4.10 Training Sessions

4.10.1 The Contractor must provide five (5) Training Sessions after delivery of the first MUAS.

4.10.1.1 Scheduling of the Training Session(s) will be done after contract award, and jointly planned between the DND and the Contractor.

4.10.2 The Contractor must provide Training Session(s) consisting of:

4.10.2.1 Operator Training Session (train-the-trainer type) for one (1) to 20 students per course, with a course length of one (1) day.

4.10.3 The Contractor must provide all Training Session(s) in English. The instructor(s) must be bilingual or have assistance from a bilingual Subject Matter Expert in order to understand and answer questions from students in both official languages: English and Canadian French.

4.10.4 The Contractor must provide Instructor(s) that are Subject Matter Experts on the MUAS equipment being provided.

4.10.5 The Contractor must use the approved and accepted **Operator Training Package** for the Training Session(s), and course lessons must follow the content found within the training package.

4.10.6 The Contractor must provide the course material listed within the **Operator Training Package** CDRL as being 'Issued to Students at Training Session(s)', and all course material and handouts must be provided in English and Canadian French.

4.10.7 The Contractor must use the MUAS(s) and additional training material identified in the **Operator Training Package Instructor Lesson Plan**, for the Training Session.

4.10.7.1 The Contractor must provide the additional training material that is listed in the **Operator Training Package Instructor Lesson Plan** as 'supplied by the Contractor'.

4.10.7.2 The Contractor must set-up the MUAS(s) and additional training material that is listed in the **Operator Training Package Instructor Lesson Plan** as 'supplied by the Contractor', for the Training Session.

5.0 ENVIRONMENTAL MANAGEMENT AND ASSESSMENT

5.1 General

5.1.1 In accordance with the Prohibition of Certain Toxic Substances Regulations (SOR/2012-285), the substances listed under this regulation must not be incorporated in any part of the equipment.

5.1.2 In accordance with the Prohibition of Asbestos and Products containing Asbestos Regulations (SOR/2018-196), the Contractor must offer asbestos-free equipment.

5.1.3 In accordance with the Federal Halocarbon Regulations (SOR/2003-289) and the Ozone-depleting Substances and Halocarbon Alternatives Regulations (SOR/2016-137), for any halocarbons that are incorporated into the equipment, the Contractor must comply with regulations SOR/2003-289 and SOR/2016-137. If such substances must be used, the Contractor must:

5.1.3.1 Inform the Technical Authority by identifying the substance(s).

5.1.3.2 Identify the specific location within the equipment and the quantity.

5.1.4 In accordance with the Products Containing Mercury Regulations (SOR/2014-254), if mercury is present in any part of the equipment, the Contractor must comply with the mercury content limit in regulation SOR/2014-254. If such substances must be used, the Contractor must:

5.1.4.1 Inform the Technical Authority by identifying the substance(s).

5.1.4.2 Identify the specific location within the equipment and the quantity.

5.1.5 In accordance with the Polychlorinated Biphenyls (PCBs) Regulations (SOR/2008-273), if PCBs are present in any part of the equipment, the Contractor must comply with the regulation, the Contractor must:

5.1.5.1 Inform the Technical Authority by identifying the substance(s).

5.1.5.2 Identify the specific location within the equipment and the quantity.

5.1.5.3 Certify that there is no technically or economically feasible PCB-free alternative.

5.2 Environmental Management System

5.2.1 The Contractor must implement and maintain an Environmental Management System which is consistent with the principles presented in ISO 14001. Certification to this standard is preferred but not mandatory.

5.2.2 The Contractor must have a formalized set of procedures and control measures in place to demonstrate environmental compliance and minimize environmental impact of the work.

5.2.3 Prior to the commencement of work, the Contractor must have in place an Emergency / Spill Response Plan and also processes and procedures for the identification, management, handling and disposal of all substances, pollutants and material covered by

the applicable municipal, territorial, provincial, federal environmental protection statutes and regulations.

5.2.4 The Contractor must update the Equipment Environmental Assessment (EEA), after it is delivered, under the following circumstances:

5.2.4.1 There are changes related to the items identified on the Hazardous Substances & Chemical Products table; or

5.2.4.2 New items/components are introduced as a result of configuration changes or modifications that contain hazardous substances and chemical products identified in the EEA.

5.3 Environmental Packaging Labels

5.3.1 The Contractor must label and ship goods falling within the Hazardous Products Act, R.S.C. 1985, C. H-3 and regulation(s) there under, in accordance with the said Act and regulation(s).

5.3.1.1 The Contractor must clearly identify the contents of the hazardous material with labels, and the SDS must explain what those hazards are.

5.4 Equipment Environmental Assessment

5.4.1 The Contractor must prepare and submit an Equipment Environmental Assessment (EEA) IAW CDRL MUAS-ILS-214 at Appendix A2.2 (page 29) to Annex A, and its associated DID MUAS-ILS-214 at Appendix A3.20 (page 85) to this ANNEX A.

5.4.2 The Contractor may provide confidential information in a separate document. Note: Proprietary information will be treated with confidentiality.

6.0 TECHNICAL REQUIREMENTS

6.1 Overview

6.1.1 The Contractor must comply with all specified requirements of the MUAS, stated in:

6.1.1.1 A1.0 APPENDIX: MUAS TECHNICAL SPECIFICATION

A1.0 APPENDIX: MUAS TECHNICAL SPECIFICATION

A1.1 System Requirements

A1.1.1 General

A1.1.1.1 The Mini Unmanned Aerial System (MUAS) must be based on proven, fielded equipment that is in-service with a North Atlantic Treaty Organization (NATO) or American, British, Canadian, Australian military partner or police agency of those countries.

A1.1.1.2 The MUAS must consist of the following components, and is further described in detail under the **System Component Requirements** section:

A1.1.1.2.1 One (1) Mini Unmanned Aerial Vehicle (MUAV);

A1.1.1.2.2 One (1) Control and Communication System (CCS);

A1.1.1.2.3 Two (2) MUAV Battery Sets;

A1.1.1.2.4 Two (2) CCS Battery Sets;

A1.1.1.2.5 Battery Charging System(s);

A1.1.1.2.6 One (1) Soft Transport Case;

A1.1.1.2.7 One (1) Hard Transport Container for the above components.

A1.1.1.3 The MUAS must include (stored within the Hard Transport Container) all tools required to setup and maintain the MUAS in accordance with the **Operator Maintenance** Concept ANNEX A paragraph 4.1.1.1 (page 10).

A1.1.1.4 The MUAS must include (stored within the Hard Transport Container without needing to be folded or otherwise distorted from flat) the Technical Publication(s) listed within the CDRL(s) as being ‘Issued with each MUAS’.

A1.1.2 Transportability and Setup

A1.1.2.1 The MUAS, when stored within the Hard Transport Container, must be transportable with no more than 5 minutes preparation time.

A1.1.2.2 The MUAS must be transportable by fixed and rotary wing aircraft, cargo ships, rail, and commercial and military wheeled vehicles on highways and cross-country.

A1.1.2.3 The MUAS time to assemble and launch must take no more than two (2) minutes.

A1.1.3 Radio Frequency Operation and Safety

A1.1.3.1 The MUAS must operate within either:

A1.1.3.1.1 The commercial 900MHz bandwidth, or

A1.1.3.1.2 The commercial 2.4GHz bandwidth, or

A1.1.3.1.3 The commercial 5.8GHz bandwidth.

A1.1.3.2 The MUAS must meet requirements of DND/CAF RF Safety Program IAW DAOD 3026-0, DAOD 3026-1 and CFTO C-55-040-001TS-002, and it must be in compliance with the requirements of Health Canada's Safety Code 6: Limits of Human Exposure to Radio frequency Electromagnetic Fields in the Frequency Range from 3 kHz to 300 GHz.

A1.1.3.3 The MUAS transmission range must be no less than 4km.

A1.1.3.4 The MUAS must have a transmission encryption to protect the system.

A1.1.3.5 The MUAS transmission latency must be no more than 200ms.

A1.1.4 Electromagnetic Interference

A1.1.4.1 The MUAS must comply with the limits for a Class A digital device pursuant to Part 15 of the FCC Rules.

A1.2 System Component Requirements

A1.2.1 MUAV

A1.2.1.1 The MUAV must be a rotary aircraft platform.

A1.2.1.2 Mobility

A1.2.1.2.1 The MUAV must maintain an average horizontal speed of no less than 12.5 m/s (approx. 45 km/h).

A1.2.1.2.2 The MUAV must maintain a climb rate of no less than 5 m/s (approx. 18 km/h).

A1.2.1.2.3 The MUAV must operate at an Above Sea Level (ASL) altitude of no less than 4500m (approx. 14,764 ft.).

A1.2.1.2.4 The MUAV must operate at an Above Ground Level altitude of no less than 480m (approx. 1575 ft.).

A1.2.1.2.5 The MUAV must stabilize itself in a constant wind of no less than 35 km/h.

A1.2.1.2.6 The MUAV must be launched by hand by a soldier wearing combat gloves, or ground launched off all types of ground.

A1.2.1.3 Autopilot Features

A1.2.1.3.1 The MUAV must have an autopilot with the following features:

A1.2.1.3.1.1 Automatic Stabilization;

A1.2.1.3.1.2 GPS position hold;

A1.2.1.3.1.3 GPS waypoint navigation;

A1.2.1.3.1.4 Return Home (point of launch and/or where the CCS location is upon Return);

A1.2.1.3.1.5 Auto Take-off;

A1.2.1.3.1.6 Auto-Landing, and

A1.2.1.3.1.7 Automatic return to home failsafe for loss of communications and low battery.

A1.2.1.4 Lights

A1.2.1.4.1 The MUAV must have near infra-red illuminators for night tactical operation.

A1.2.1.5 Camera

A1.2.1.5.1 The MUAV must use a minimum of 2-axis mechanically stabilized camera system.

A1.2.1.5.2 The MUAV must have one (1) pan tilt camera with no less than the following features:

A1.2.1.5.2.1 Electro-Optic / Infrared (EO/IR);

A1.2.1.5.2.2 4K UHD Colour;

A1.2.1.5.2.3 16X zoom;

A1.2.1.5.2.4 360 degree horizontal rotation to have 360 degree field of view;

A1.2.1.5.2.5 Camera Horizontal Field of View of no less than 90 degrees;

A1.2.1.5.2.6 180 degree of vertical field of view, and

A1.2.1.5.2.7 320 X 240 Thermal resolution.

A1.2.1.6 The MUAV must include a GPS to indicate the MUAV position coordinates and coordinates of where the camera is focusing.

A1.2.1.7 The MUAV transmitted video resolution must be no less than 720p.

A1.2.1.8 The MUAV recorded video must use at least H264 video compression.

A1.2.2 **CCS**

A1.2.2.1 Display

A1.2.2.1.1 The CCS screen size must be no less than 165.1mm (approx. 6.5 inches).

A1.2.2.1.2 The CCS must have an image display with a minimum HD resolution of 720p.

A1.2.2.1.3 The CCS display brightness must be no less than 500 cd/m².

A1.2.2.1.4 The CCS must have an image display whose brightness is user-adjustable for daylight and low light viewing.

A1.2.2.1.5 The CCS must have a display cover to hide light from the screen for tactical operation and to shield the screen for use in direct sunlight.

A1.2.2.2 The CCS must record and store no less than 20 hours of videos in addition to no less than 1000 images.

A1.2.2.3 The CCS recorded data must be exportable to a portable computer.

A1.2.2.4 The MUAV must have an onboard micro SD Card of no less than 64GB.

A1.2.2.5 The MUAV micro SD card must be encrypted with AES-XTS 256 bit key length.

A1.2.3 **MUAV Battery Set**

A1.2.3.1 The MUAV Battery Set must provide no less than 20 minutes of operation at an approximate temperature of 20ºC (+/- 3 ºC). Operation is defined as:

A1.2.3.1.1 Power-on and initialization sequence of the MUAV and CCS.

A1.2.3.1.2 Movement of the MUAV ‘down range’ for 1 km at a speed of no less than 10 km/h, with periodic movements throughout the majority of the 20 minutes, and then returning back for 1 km before the 20 minutes has expired, and

A1.2.3.1.3 Continuous video transmission (small fluctuations allowed) between the MUAV and CCS throughout the 20 minutes.

A1.2.3.2 The MUAV Battery Set must be replaced in no more than one (1) minute.

A1.2.4 **CCS Battery Set**

A1.2.4.1 The CCS Battery Set must provide no less than three (3) hours of operation at an approximate temperature of 20ºC (+/- 3 ºC).

A1.2.4.2 The CCS Battery Set must be replaced in no more than one (1) minute.

A1.2.5 **Battery Charging System(s)**

A1.2.5.1 The Battery Charging System(s) must include a universal power input of 110VAC – 220VAC, 50Hz – 60Hz, with a North American plug type.

A1.2.5.2 The Battery Charging System(s) must provide visual indications of battery charging in order to indicate when charging is in progress and when it is complete.

A1.2.5.3 The Battery Charging System(s) must recharge the four (4) Battery Sets (2 x MUAV and 2 x CCS) at the same time.

A1.2.5.3.1 This can be done either with one Battery Charging System that can recharge both types of Battery Sets, or with a separate Battery Charging Systems for each type of Battery Set.

A1.2.5.4 The Battery Charging System(s) full re-charge time for one (1) MUAV and CCS Battery Set must not exceed two (2) hours.

A1.2.5.5 The Battery Charging System(s) must be certified CE, UL or equivalent.

A1.2.6 **Soft Transport Case**

A1.2.6.1 The Soft Transport Case must hold:

A1.2.6.1.1 MUAV

A1.2.6.1.2 CCS

A1.2.6.1.3 Two (2) MUAV Battery Sets;

A1.2.6.1.4 Two (2) CCS Battery Sets;

A1.2.6.1.5 Battery Charging System(s), and

A1.2.6.1.6 One (1) complete set of replacement rotor blades for each motor.

A1.2.6.2 The Soft Transport Case must be compact and padded to protect the MUAV and CCS when carried in a backpack.

A1.2.7 **Hard Transport Container**

A1.2.7.1 The Hard Transport Container must have no less than an IP67 rating, or equivalent, IAW NEMA IEC 60529.

A1.2.7.2 The Hard Transport Container must protect the MUAS components and tools stored within it from a 2m drop.

A1.3 Physical Requirements

A1.3.1 **MUAV Size**

A1.3.1.1 The MUAV’s folded size must be no more than 310mm X 150mm X 100mm.

A1.3.1.2 The MUAV’s unfolded size be no more than 665mm X 570mm X 220mm.

A1.3.2 **CCS Size**

A1.3.2.1 The CCS’ overall size must be no more than 350mm x 260mm x 80mm

A1.3.3 **MUAV Weight**

A1.3.3.1 The MUAV weight, including its Battery Set, must be no more than 15kg.

A1.3.4 **CCS Weight**

A1.3.4.1 The CCS weight, including its CCS Battery Set, must be no more than 1.75kg.

A1.3.5 **Colour**

A1.3.5.1 The MUAS must have the predominant exterior colour (so that it contributes to and does not compromise an operator's camouflage) of:

A1.3.5.1.1 Flat/matte finish green;

A1.3.5.1.2 Flat/matte finish earth tone;

A1.3.5.1.3 Flat/matte finish grey, or

A1.3.5.1.4 Flat/matte finish black.

A1.3.5.2 Items that need to be painted to meet this requirement must be painted using one of the following paint colours (IAW AMS-STD-595) and must have a flat/matte finish:

A1.3.5.2.1 34094 Green;

A1.3.5.2.2 30051 Brown;

A1.3.5.2.3 33446 Desert Tan;

A1.3.5.2.4 34082 Green;

A1.3.5.2.5 33105 Brown;

A1.3.5.2.6 33303 Sand, or

A1.3.5.2.7 Black.

A1.4 Performance Requirements

A1.4.1 **Tactical Flight**

A1.4.1.1 The MUAV sound pressure level must be no more than 40 dBA at 50m above the ground.

A1.4.2 **Ingress Protection, Cleaning and Submersion**

A1.4.2.1 The MUAV must have no less than an IP53 rating, or equivalent, IAW NEMA IEC 60529.

A1.4.2.2 The CCS must have no less than an IP53 rating, or equivalent, IAW NEMA IEC 60529.

A1.5 Environmental/Climatic Requirements

A1.5.1 Climatic Conditions

A1.5.1.1 The MUAS must operate in temperatures from –20ºC to +50ºC.

A1.5.1.2 The MUAS must operate in relative humidity from 5% to 100%.

A2.0 APPENDIX: CONTRACT DATA REQUIREMENTS LIST

A2.1 Management and Explanation of the CDRL

A2.1.1 Management of Data Items

A2.1.1.1 The Contractor must review, update and deliver amendments, or confirm the continuing accuracy of data items annotated with a maintenance period, in accordance with the CDRL.

A2.1.1.2 The Contractor must deliver amended, reissued or resubmitted data items to the location(s) and in the format and quantities specified in the CDRL for the initial submission of the data items.

A2.1.2 Explanation of the CDRL

A2.1.2.1 **CDRL Line Number** – This field provides the unique sequential number that identifies each data item within different functional groups (eg, PM-001, SE-101, & ILS-201).

A2.1.2.2 **CDRL Title** – This field identifies the title of the data item.

A2.1.2.3 **SOW Para Ref** – This field shows the paragraph in the SOW where the data item is stipulated. There may be multiple references to the data item in the SOW, but generally only the first (or one) reference is shown in the CDRL.

A2.1.2.4 **Version** – This field identifies the particular delivery of a data item during its lifecycle (ie, draft, final).

A2.1.2.5 **Delivery Schedule** – This field specifies the date(s) and/or events by which the data item is required to be delivered. The date of delivery applies to all delivery locations and quantities unless otherwise specified. Following are some of the abbreviations and symbols used with this column:

A2.1.2.5.1 'KO' means the Kick-Off Meeting date;

A2.1.2.5.2 Numerals indicate the number of Calendar Days, unless specified otherwise;

A2.1.2.5.3 '+' means after the specified date or event; and

A2.1.2.5.4 '-' means before the specified date or event.

A2.1.2.5.5 If a data item is required to be delivered before an event having a duration of greater than one day, delivery date must be calculated from the first day of that event. If a data item is required to be delivered after an event having a duration of greater than one day, the delivery date must be calculated from the last day of that event.

A2.1.2.6 **Quantity** – This field specifies the total number of data items to be delivered to the associated delivery location(s), including the number of hard (H) and soft (S) copies. When both hard and soft copies are requested, the action copy will be indicated in the notes column.

A2.1.2.7 **Addressee** – This field shows the short title of the DND representative to whom the hard and soft copies of the data items must be delivered. The action hard copy of the data item must be delivered to the first nominated location in this field.

A2.1.2.8 **Data Item Description Reference** – This field provides the identification of the DID with which the data item must comply.

A2.1.2.9 **DND Action Period** – This field defines the number of Calendar Days available to the DND to action the data item and respond to the Contractor, if that action requires a response.

A2.1.2.9.1 The period begins upon the date the action copy of the data item is received at the first nominated addressee.

A2.1.2.9.2 The action period applies to all deliveries, including first deliveries, amendments and re-issues. If a data item is delivered earlier than the first delivery date shown in the CDRL, the DND is not obliged to action it until after that date. If the action period states 'by MSR' for a data item delivered prior to a Mandated System Review (MSR), the action period ends when the minutes for that MSR are approved.

A2.1.2.10 **DND Action Required** – This field indicates the purpose for which the data item is being submitted to the DND, which will either be for Review, Approval or Acceptance.

A2.1.2.11 **Maintenance** – This field specifies either the timings or the time intervals, after each delivery, at which the data item must be reviewed by the Contractor and either have its continuing accuracy status confirmed in writing, or be updated and reissued. The Maintenance column does not apply to draft or preliminary versions of data items. The following abbreviations and codes are applicable to this column:

A2.1.2.11.1 xM – every x calendar months;

A2.1.2.11.2 R – to enable it to be considered at each MSR set out in the System Engineering program;

A2.1.2.11.3 SA – to enable it to be provided for the purposes of conducting Acceptance of each System;

A2.1.2.11.4 FA – to enable it to be provided for the purposes of Final Acceptance; and

A2.1.2.11.5 NA or blank – not applicable.

A2.1.2.12 Notes: Where necessary, additional explanatory information relating to a CDRL data item is provided in this column.

A2.2 CDRL Item List

CDRL #	CDRL Title	SOW Para Ref	Version	Delivery Schedule	Qty	Addressee	DID # and Ref	DND Action Period	DND Action Required	Maint	Notes
MUAS-PM-001	Contract Master Schedule	Para. 3.2.1 (pg. 8)	Draft	KO	1S	TA	MUAS-PM-001	14	Review		Update aligned with Contract Status Report
			Revised or Final	DND Comments + 14	1S	TA, CA, PA, ILSM	App. A3.3 (pg. 36)	7	Review or Acceptance		
			Updates	With Contract Status Report, when changed	1S	TA, CA, PA, ILSM			Review		
MUAS-PM-002	Contract Status Report	Para. 3.3.1 (pg. 8)	Draft	KO+28	1S	TA, ILSM	MUAS-PM-002	14	Review		
			Revised or Final	DND Comments + 7	1S	TA, CA, PA, ILSM	App. A3.4 (pg. 38)	7	Review or Acceptance		
			Updates	Monthly	1S	TA, CA, PA, ILSM			Review		
MUAS-PM-003	Meeting Agenda	Para. 3.4.5.1.1 (pg. 9)	Draft	Meeting Date - 7	1S	CA, TA, PA	MUAS-PM-003	5	Review		
			Revised	Meeting Date - 1	1S	CA, TA, PA	App. A3.5 (pg. 39)				
			Final	Meeting Date	1H	CA, TA, PA		7	Review or Acceptance		
MUAS-PM-004	Meeting Minutes	Para. 3.4.5.1.2 (pg. 9)	Draft	Meeting Date + 7	1S	CA, TA, PA	MUAS-PM-004	7	Review		
			Revised or Final	DND Comments + 7	1S	CA, TA, PA	App. A3.6 (pg. 40)	7	Review or Acceptance		
MUAS-ILS-201	Application of Spectrum Supportability	Para. 4.3.2 (pg. 10)	Draft	KO + 28	1S	TA	MUAS-ILS-201	28	Review		
			Revised or Final	DND Comments + 14	1S	TA	App. A3.7 (pg. 41)	14	Review or Acceptance		
MUAS-ILS-202	Operator Manual	Para. 4.4.1.1.1 (pg. 11)	Draft English	KO + 77	1S, 1H	ILSM	MUAS-ILS-202	28	Review		Hard copy is the action copy.
			Revised or Final English	DND Comments + 28	1S, 1H	ILSM	App. A3.8 (pg. 62)	14	Review or Acceptance		

CDRL #	CDRL Title	SOW Para Ref	Version	Delivery Schedule	Qty	Addressee	DID # and Ref	DND Action Period	DND Action Required	Maint	Notes
			Draft Bilingual	Acceptance of English Operator Manual + 56	1S, 1H	ILSM		21	Review		
			Revised or Final Bilingual	DND Comments + 14	1S, 1H	ILSM		14	Review or Acceptance		
			Final		1H	Issued with each MUAS					
MUAS-ILS-203	Operator Quick Reference Card	Para. 4.4.1.2.1 (pg. 11)	Draft English	With English Draft Operator Manual	1S, 1H	ILSM	MUAS-ILS-203	14	Review		Hard copy is the action copy.
			Revised or Final English	DND Comments + 14	1S, 1H	ILSM	App. A3.9 (pg. 64)	14	Review or Acceptance		
			Draft Bilingual	With Bilingual Draft Operator Manual	1S, 1H	ILSM		14	Review		
			Revised or Final Bilingual	DND Comments + 14	1S, 1H	ILSM		14	Review or Acceptance		
			Final		1H	Issued with each MUAS					
MUAS-ILS-204	Maintenance and Parts Handbook	Para. 4.4.1.3.1 (pg. 11)	Draft English	With English Draft Operator Manual	1S, 1H	ILSM	MUAS-ILS-204	28	Review		Hard copy is the action copy.
			Revised or Final English	DND Comments + 21	1S, 1H	ILSM	App. A3.10 (pg. 66)	14	Review or Acceptance		
			Draft Bilingual	Acceptance of English Maintenance and Parts Handbook + 42	1S, 1H	ILSM		21	Review		
			Revised or Final Bilingual	DND Comments + 14	1S, 1H	ILSM		14	Review or Acceptance		

CDRL #	CDRL Title	SOW Para Ref	Version	Delivery Schedule	Qty	Addressee	DID # and Ref	DND Action Period	DND Action Required	Maint	Notes
			Final		1H	Issued with each MUAS					
MUAS-ILS-205	Operator Training Package	Para. 4.4.1.4.1 (pg. 11)	Draft English	Acceptance of English Operator Manual + 21	1S, 1H	ILSM	MUAS-ILS-205	14	Review		Hard copy is the action copy.
			Revised or Final English	DND Comments + 14	1S, 1H	ILSM	App. A3.11 (pg. 68)	14	Review or Acceptance		
			Draft Bilingual	Acceptance of Bilingual Operator Manual + 42	1S, 1H	ILSM		14	Review		
			Revised or Final Bilingual	DND Comments + 14	1S, 1H	ILSM		14	Review or Acceptance		
			See notes		1S, 1H	Issued to Students at the Training Session(s)					Hard copy of Student Handout only, and soft copy on CD of the Operator Training Package.
MUAS-ILS-206	Preservation, Storage and Reactivation Instructions	Para. 4.4.1.5.1 (pg. 11)	Draft English	KO + 77	1S, 1H	ILSM	MUAS-ILS-206	14	Review		Hard copy is the action copy.
			Revised or Final English	DND Comments + 14	1S, 1H	ILSM	App. A3.12 (pg. 70)	14	Review or Acceptance		
			Draft Bilingual	Acceptance of English Preservation, Storage and Reactivation Instructions + 28	1S, 1H	ILSM		14	Review		
			Revised or Final Bilingual	DND Comments + 14	1S, 1H	ILSM		14	Review or Acceptance		

CDRL #	CDRL Title	SOW Para Ref	Version	Delivery Schedule	Qty	Addressee	DID # and Ref	DND Action Period	DND Action Required	Maint	Notes
MUAS-ILS-207	Provisioning Parts Breakdown	Para. 4.5.3.1.1 (pg. 14)	Draft	Same time as the draft Maintenance and Parts Handbook	1S	ILSM	MUAS-ILS-207	14	Review		Soft copy is the action copy.
			Revised or Final	DND Comments + 14	1S	ILSM	App. A3.13 (pg. 72)	14	Review or Acceptance		
MUAS-ILS-208	Supplementary Provisioning Technical Documentation	Para. 4.5.3.2.1 (pg. 14)	Draft	Same time as the draft Provisioning Parts Breakdown	1S	ILSM	MUAS-ILS-208	14	Review		Soft copy is the action copy.
							App. A3.14 (pg. 74)				
			Revised or Final	DND Comments + 14	1S	ILSM		14	Review or Acceptance		
MUAS-ILS-209	Material Identification Data Set	Para. 4.5.3.3 (pg. 14)	Draft	Same time as the draft Provisioning Parts Breakdown	1S	ILSM	MUAS-ILS-209	14	Review		Soft copy is the action copy.
			Revised or Final	DND Comments + 14	1S	ILSM	App. A3.15 (pg. 75)	14	Review or Acceptance		
			Updates - For new items only	If Canada purchases additional serialized items (options or spares)	1S	ILSM		14	Review or Acceptance		
MUAS-ILS-210	Identification Plates – Design Template & Populated Designs	Para. 4.6.1 (pg. 14)	Draft Design Template	KO + 28	1S, 1H	ILSM	MUAS-ILS-210	14	Review		Hard copy is the action copy.
			Revised or Final Design Template	DND Comments + 14	1S, 1H	ILSM	App. A3.16 (pg. 76)	14	Review or Acceptance		

CDRL #	CDRL Title	SOW Para Ref	Version	Delivery Schedule	Qty	Addressee	DID # and Ref	DND Action Period	DND Action Required	Maint	Notes
			Draft Populated Designs	Delivery of draft Provisioning Parts Breakdown + 14	1S, 1H	ILSM		14	Review		
			Revised or Final Populated Designs	DND Comments + 14	1S, 1H	ILSM		14	Review or Acceptance		
MUAS-ILS-211	Controlled and Non-Controlled Goods List	Para. 4.7.1 (pg. 15)	Draft	Same time as the draft Provisioning Parts Breakdown	1S	ILSM	MUAS-ILS-211	21	Review		Soft copy is the action copy.
			Revised or Final	DND Comments + 14	1S	ILSM	App. A3.17 (pg. 78)	14	Review or Acceptance		
MUAS-ILS-212	Identification Labels for Storage & Shipment and Packaging Codes	Para. 4.8.3 (pg. 15)	Draft Labels	KO + 42	1S	ILSM	MUAS-ILS-212	28	Review		Soft copy is the action copy.
			Revised or Final Labels	DND Comments + 14	1S	ILSM	App. A3.18 (pg. 80)	14	Review or Acceptance		
			Draft Codes	Provision of NSNs + 35	1S	ILSM		21	Review		
			Revised or Final Codes	DND Comments + 14	1S	ILSM		21	Review or Acceptance		
			Updates	If required after a range of spares are chosen by DND	1S	ILSM		14	Review or Acceptance		
MUAS-ILS-213	List of Items to be Supported	Para. 4.9.1 (pg. 15)	Draft	Final acceptance of the Maintenance and Parts Handbook, PPB and SPTD + 28	1S	ILSM	MUAS-ILS-213	14	Review		Soft copy is the action copy.

CDRL #	CDRL Title	SOW Para Ref	Version	Delivery Schedule	Qty	Addressee	DID # and Ref	DND Action Period	DND Action Required	Maint	Notes
			Revised or Final	DND Comments + 14	1S	ILSM	App. A3.19 (pg. 82)	14	Review or Acceptance		
MUAS-ILS-214	Equipment Environmental Assessment	Para. 5.4.1 (pg. 18)	Draft	KO + 84	1S	TA	MUAS-ILS-214	56	Review		Soft copy is the action copy.
			Revised or Final	DND Comments + 28	1S	TA	App. A3.20 (pg. 85)	14	Review or Acceptance		

A3.0 APPENDIX: DATA ITEM DESCRIPTION

A3.1 Data Deliverable Format

A3.1.1 **Unless otherwise specified as a specific requirement, the Contractor must deliver all of the soft copies of data deliverables, in formats compatible with the office software currently in use by the DND as listed:**

A3.1.1.1 Microsoft (MS) Windows 10 Enterprise Operating System (OS);

A3.1.1.2 MS Edge 2019;

A3.1.1.3 MS Office Professional Plus 2013 (Word, Excel, Access, PowerPoint and Outlook); and

A3.1.1.4 Foxit PhantomPDF version 10;

A3.2 DID Table Definitions

The following section defines the various blocks of information found on the Data Item Description (DID) forms:

BLOCK 1 – TITLE
The title of the data item for the DID.

BLOCK 2 - IDENTIFICATION NUMBER
The Data Item Description (DID) number, consisting of a sequential three-digit number and prefixed with an abbreviation code, to uniquely identify the DID. Note that the 001-099 series is reserved to Project Management (PM) DIDs, the 101-199 series is reserved to Systems Engineering (SE) DIDs and the 201-299 series is reserved to Integrated Logistics Support (ILS) DIDs. The abbreviation codes used for the prefix are:

"PM" for Project Management
"SE" for Systems Engineering
"ILS" for Integrated Logistics Support

BLOCK 3 - DESCRIPTION
Provides a general description of the data content requirements.

BLOCK 4 – RELATED DOCUMENT(S)
Provides a listing of the related documents and specifications associated with and required to produce this DID.

BLOCK 5 - CONTRACT REFERENCE
The specific paragraph numbers from the Contract Statement of Work and CDRL to assist in identifying the work effort associated with the data item.

BLOCK 6 - PREPARATION INSTRUCTIONS
Provides the preparation instructions for the content and format requirements for the DID.

A3.3 DID – Contract Master Schedule

DATA ITEM DESCRIPTION	
1. TITLE **Contract Master Schedule (CMS)**	2. IDENTIFICATION NUMBER **DID MUAS-PM-001**
3. DESCRIPTION The CMS describes the Contractor's planned sequence of activities, milestones and decision points to enable the objectives of the Contract to be met. Additionally, the CMS defines the current Contract schedule status, comparing the current schedule to the contracted schedule.	
4. RELATED DOCUMENTS	5. CONTRACT REFERENCE **SOW**: **Para. 3.2.1 (pg. 8)** **CDRL**: **App. A2.2 (pg. 29)**

6. PREPARATION INSTRUCTIONS

6.1. **CONTENT**

6.1.1. **Data to be Included**

6.1.1.1. The CMS must graphically depict the contract schedule and progress at the activity level.

6.1.1.2. The CMS must graphically present or otherwise identify:

6.1.1.2.1. activities and their estimated durations;

6.1.1.2.2. milestones, including milestones in the contract;

6.1.1.2.3. the relationships and dependencies between activities and milestones to be accomplished by or for the Contractor in the performance of its obligations under the contract;

6.1.1.2.4. critical and non-critical paths;

6.1.1.2.5. floats available on all activities and milestones;

6.1.1.2.6. allocated resources for each activity; and

6.1.1.2.7. notes on the use of the CMS, including a glossary of terms and symbols used.

6.1.1.3. The CMS must include:

6.1.1.3.1. other major events, as agreed between the Contractor and DND;

6.1.1.3.2. DND tasks, where such tasks interface with, and may affect, Contractor tasks;

6.2. **SOFT COPY FORMAT**

6.2.1. The CMS must be submitted as a PDF file type.

6.2.2. The CMS must be displayed in a variety of formats:

6.2.2.1. a Gantt chart;

6.2.2.2. a list of all tasks, together with their planned and actual start and completion dates; and

6.2.2.3. a listing of milestones (including Milestones in the contract), together with their original, rescheduled, forecast and actual completion dates.

6.2.3. **Soft Copy format submission size below 7MB** – The CMS PDF may be submitted via email as follows:

6.2.3.1. To Field: As per the related CDRL section 9.A. Addressee, as identified in the contract.

6.2.3.2. Subject Field: MUAS-PM-001 – CMS – [Rev #] – [Date of Issue]

6.2.4. **Soft Copy format submission size at or above 7MB** - The CMS PDF must be submitted on CD or DVD media and be labelled as follows:

6.2.4.1. Mini Unmanned Aerial System

6.2.4.2. CMS;

6.2.4.3. MUAS-PM-001;

6.2.4.4. The Revision number, and

6.2.4.5. The date of issue.

A3.4 DID – Contract Status Report

DATA ITEM DESCRIPTION	
1. TITLE **Contract Status Report (CSR)**	2. IDENTIFICATION NUMBER **DID MUAS-PM-002**
3. DESCRIPTION The Contract Status Report (CSR) is the principal statement and explanation of the status of the contract at the end of each reporting period, and will summarize the Contractor's progress and activities in relation to the Project milestones, schedule, and contract data deliverables.	
4. RELATED DOCUMENTS	5. CONTRACT REFERENCE **SOW**: **Para. 3.3.1 (pg. 8)** **CDRL**: **App. A2.2 (pg. 29)**

6. PREPARATION INSTRUCTIONS

6.1. **CONTENT**

6.1.1. The CSR must identify the date at which the CSR is valid, and the time period since the status date of the previous CSR (the 'reporting period').

6.1.2. The CSR must include the following information:

6.1.2.1. A summary of significant work activities (including those undertaken by major Subcontractors) undertaken during the reporting period;

6.1.2.2. A summary of significant work activities (including those undertaken by major Subcontractors) expected to be undertaken in the next reporting period.

6.1.2.3. A summary of progress (including progress by major Subcontractors) against the CMS.

6.1.2.4. A narrative detailing progress against milestones, expected date of completion of near milestones, problem areas and work-around plans where required;

6.1.2.5. A status report on contract data deliverable end items as called up in the CDRLs;

6.1.2.6. An Integrated Logistic Support (ILS) report, giving the status of ILS activity;

6.1.2.7. A list of correspondence that requires a response from the DND/PSPC, but for which no response has been received; and

6.1.2.8. A list of DND/PSPC correspondence to the Contractor for which a response is outstanding, and an estimate of the response date.

6.2. **SOFT COPY FORMAT**

6.2.1. The CSR must be submitted as a PDF file type.

6.2.2. The CSR PDF must be submitted via email (submission size not to exceed 7MB) as follows:

6.2.2.1. To Field: As per the related CDRL section 9.A. Addressee, as identified in the contract.

6.2.2.2. Subject Field: MUAS-PM-002 – CSR – [Rev #] – [Date of Issue]

A3.5 DID – Meeting Agenda

DATA ITEM DESCRIPTION	
1. TITLE **Meeting Agenda**	2. IDENTIFICATION NUMBER **DID MUAS-PM-003**
3. DESCRIPTION The Meeting Agenda contains the venue information and identifies the discussion items to be covered at meetings.	
4. RELATED DOCUMENTS	5. CONTRACT REFERENCE **SOW**: **Para. 3.4.5.1.1 (pg. 9)** **CDRL**: **App. A2.2 (pg. 29)**

6. PREPARATION INSTRUCTIONS

6.1. **CONTENT**

6.1.1. The Meeting Agenda must set forth the venue, identify all requirements and list the discussion items to be covered at the meeting.

6.1.2. Venue. The Meeting Agenda must address the venue as follows:

6.1.2.1. Meeting Identification Number;

6.1.2.2. Purpose;

6.1.2.3. Date, time and location; and

6.1.2.4. Attendees.

6.1.3. Discussion items. The Meeting Agenda must address the discussion items through the following sections:

6.1.3.1. Opening Remarks;

6.1.3.2. Agenda Review;

6.1.3.3. Review of Previous Minutes;

6.1.3.4. Opened Discussion Items;

6.1.3.5. New Discussion Items;

6.1.3.6. Review of Action Items;

6.1.3.7. Next Venue; and

6.1.3.8. Closing Remarks.

6.2. **HARD COPY FORMAT**

6.2.1. The Meeting Agenda must be printed on paper with these characteristics:

6.2.1.1. Weight of no less than 90 gsm;

6.2.1.2. Brightness of no less than 96 ISO brightness;

6.3. **SOFT COPY FORMAT**

6.3.1. The Meeting Agenda must be submitted as a MS Word file type.

6.3.2. The Meeting Agenda MS Word document must be submitted via email (submission size not to exceed 7MB) as follows:

6.3.2.1. To Field: As per the related CDRL section 9.A. Addressee, as identified in the contract.

6.3.2.2. Subject Field: MUAS-PM-003 – Meeting Agenda – [Rev #] – [Date of Issue]

A3.6 DID – Meeting Minutes

DATA ITEM DESCRIPTION	
1. TITLE **Meeting Minutes**	2. IDENTIFICATION NUMBER **DID MUAS-PM-004**
3. DESCRIPTION The Meeting Minutes contains the detailed records of proceedings, discussions, decisions and action items from meetings.	
4. RELATED DOCUMENTS	5. CONTRACT REFERENCE **SOW**: **Para. 3.4.5.1.2 (pg. 9)** **CDRL**: **App. A2.2 (pg. 29)**

6. PREPARATION INSTRUCTIONS

6.1. **CONTENT**

6.1.1. The Meeting Minutes must contain the detailed records of proceedings, discussions, decisions and action items from the meeting and be presented through the following sections:

6.1.1.1. General – consisting of meeting identification number, purpose, date, time and location;

6.1.1.2. Attendees, consisting of the organization each person represents, and the identification of the Chairperson(s);

6.1.1.3. Opening Remarks;

6.1.1.4. **Action Item Report** - used to monitor issues, assign responsibility, direct action and track status, history, and progress, and must consisting of:

6.1.1.4.1. Item #; date initiated; required action; assigned actionee; target completion date; cross-reference to all related action items.

6.1.1.4.2. Action Item Report must be **updated** with each meeting and must consisting of:

6.1.1.4.2.1. Action Item current status and the actual date completed;

6.1.1.5. Next Venue;

6.1.1.6. Closing Remarks;

6.2. **SOFT COPY FORMAT**

6.2.1. The Meeting Minutes must be submitted as a PDF file type.

6.2.2. The Meeting Minutes PDF must be submitted via email (submission size not to exceed 7MB) as follows:

6.2.2.1. To Field: As per the related CDRL section 9.A. Addressee, as identified in the contract.

6.2.2.2. Subject Field: MUAS-PM-004 – Meeting Minutes – [Rev #] – [Date of Issue]

A3.7 DID – Application for Spectrum Supportability

DATA ITEM DESCRIPTION	
1. TITLE **Application for Spectrum Supportability**	2. IDENTIFICATION NUMBER **DID MUAS-ILS-201**
3. DESCRIPTION This Application for Spectrum Supportability document (DND form 552) describes the general wireless equipment usage as well as the transmitter, antenna and receiver equipment characteristics of the system that is provided.	
4. RELATED DOCUMENTS	5. CONTRACT REFERENCE **SOW**: **Para. 4.3.2 (pg. 10)** **CDRL**: **App. A2.2 (pg. 29)**

6. PREPARATION INSTRUCTIONS

6.1. **CONTENT**

6.1.1. The Application for Spectrum Supportability must be completed and provided in accordance with the requirements as outlined in the Application for Spectrum Supportability.

6.1.2. The following sections of the Application for Spectrum Supportability must be completed:

6.1.2.1. Part 1, Block 1 – Equipment Nomenclature and/or Model Number;

6.1.2.2. Part 2 – Transmitter Equipment Characteristics;

6.1.2.3. Part 3 – Receiver Equipment Characteristics, and

6.1.2.4. Part 4 – Antenna Equipment Characteristics.

6.1.3. The values entered in the Application for Spectrum Supportability must be measured values.

6.1.4. Where equipment is developmental, specified values may be substituted for measured values, and so indicated on the forms. If the proposed equipment is in use by the United States military it may already have a US Department of Defence (DoD) Form 1494. If available, a DoD 1494 form will be accepted by DND in lieu of a DND 552.

6.2. **SOFT COPY FORMAT**

6.2.1. The Application for Spectrum Supportability must be provided as a PDF file.

6.2.2. **Soft Copy format submission size below 7MB** – The Application for Spectrum Supportability may be submitted via email as follows:

6.2.2.1. To Field: As per the related CDRL section 9.A. Addressee, as identified in the contract.

6.2.2.2. Subject Field: MUAS-ILS-201 – Application for Spectrum Supportability – [Rev #] – [Date of Issue]

6.2.3. **Soft Copy format submission size at or above 7MB** - The Application for Spectrum Supportability file must be submitted on CD or DVD media and be labelled as follows:

6.2.3.1. Mini Unmanned Aerial System

6.2.3.2. Application for Spectrum Supportability

6.2.3.3. MUAS-ILS-201;

6.2.3.4. The Revision number, and

6.2.3.5. The date of issue.

Application for Spectrum Supportability **Demande d'octroi de Fréquences**	Date	Page

To: À:	From (Office making request): De (Bureau qui présente la demande):

1. Equipment nomenclature and/or model number
   Désignation du matériel et numéro de modèle

2. Status of supportability request (check one)
   Centre de demande d'octroi (cochez une seule case)

☐ Experimental research or exploratory development / Recherche expérimentale ou développement préliminaire
☐ Advanced or engineering development / Développement avancé ou ingénierie
☒ Operational / Utilisation opérationnelle

1. Equipment Usage – Utilisation du matériel

3. **Functional and purpose**: TRANSMISSION OF LIVE CAMERAIMAGES AND CONTROL SIGNALS BETWEEN THE MINI UNMANNED AERIAL VEHICLE (MUAV) AND THE CONTROL AND COMMUNICATION SYSTEM (CCS).
   Fonction et but: TRANSMISSION D'IMAGES VIDÉO ET DE SIGNAUX DE COMMANDE ENTRE LE MINI VÉHICULE AÉRIEN SANS PILOTE (MUAV) ET LE SYSTÈME DE CONTRÔLE ET DE COMMUNICATION (CCS).

4. **Method of operation:** OPERATOR REMOTELY PILOT THE MUAV BY MEANS OF CCS RF VIDEO TRANSMITTER & RECEIVER WIRELESS LINK.
   Mode de fonctionnement: UN OPÉRATEUR PILOTE À DISTANCE ET MANIPULE LE MUAV AU MOYEN DE LIAISON SANS FIL ÉMETTEUR ET RECEPTEUR VIDÉO RF DU CCS.

5. **Extent of use:** MISSION DURATION IS 20 MINUTES WITH CONTINUOUS USE DURING OPÉRATION.
   Étendue de l'utilisation : LA DURÉE DE LA MISSION EST DE 20 MINUTES AVEC UTILISATION CONTINUE DURANT L'UTILISATION.

6. **Operational environment:** OPÉRATION IN ALL ENVIRONMENTAL CONDITIONS, LOCATIONS CAN BE IN URBAN AREAS AND ALL TERRAIN CONDITIONS IN THE FIELD.
   Milieu d'utilisation: FONCTIONNEMENT DANS TOUTES LES CONDITIONS ENVIRONMENTALES, LES EMPLACEMENTS PEUVENT ÊTRE DANS DES ZONES URBAINES ET TOUTES LES CONDITIONS DE TERRAIN SUR LE TERRAIN.

7. **Geographical area of experimental research, or developmental evaluation:** NO RESEARCH OR DEVELOPMENT.
   Région géographique de la recherche expérimentale ou de l'évaluation du développement : AUCUNE RECHERCHE OU DÉVELOPPEMENT.

8. **Geographical area of operational use:** WORLWIDE
   Région géographique de l'utilisation opérationnelle : À L'ÉCHELLE MONDIALE

9 **Number of equipments in initial phase**: 160 MINI UNMANNED AERIAL SYSTEM (MUAS)
   Nombre d'appareils pendant la phase initiale : 160 SYSTÈME MINI VEHICULE AÉRIEN SANS PILOTE (MUAS)

10. **Number of equipments planned for operational use:** EOD TEAMS WILL USE ONE (1) MUAS PER TEAM AND THE COMBAT ENGINEERS WILL USE ONE (1) MUAS PER SECTION
   Nombre d'appareils prévu pour l'utilisation opérationnelle : LES ÉQUIPES EOD VONT UTILISER UN (1) MUAS PAR ÉQUIPE ET LES INGÉNIEURS DE COMBATS VONT UTILISER UN (1) MUAS PAR SECTION

11. **Number of these equipments operating simultaneously in the same electromagnetic environment**: MAX SIX (6) MUAS PER LOCATION, CONSISTING OF SIX (6) MUAV AND SIX (6) CCS.
   Nombre d'appareils fonctionnant simultanément dans le même milieu électromagnétique : MAX SIX (6) MUAS PAR EMPLACEMENT, COMPRENANT SIX (6) UAV ET SIX (6) CCS.

12. **Target date for the start and end of experimental or developmental evaluation**: N/A
   Date prévue pour le commencement et la fin de l'évaluation expérimentale ou de l'évaluation ou développement : N/A

13. **Target date for operational use**: 2025/2026
   Date prévue d'utilisation opérationnelle : 2025/2026

14. Previous DND 552 application number (for DIMTPS 5 use only)
   Numéro d'application de l'ancien formulaire MDN 552 (pour utilisation de DTPSGI 5 seulement)

☐ Continued unchanged (see remarks) / Reste en vigueur (voir les remarques)
☐ Superseded / Est remplacé
☐ Related / Demeure connexe
☐ None / Aucun

DND 552_____ CCEB CF 299_____

2. Transmitter Equipment Characteristics - Caractéristiques du matériel émetteur

1. Nomenclature, Manufacturer's Model No.:
Désignation, n° de modèle du fabricant:

2. Manufacturer's Name:
Nom du fabricant:

3. Transmitter Installation:
Installation émettrice:

4. Transmitter Type:
Type d'émetteur:

5. Tuning Range:
Gamme d'accord:

6. Method of Tuning:
Méthode d'accord:

7. RF Channelling Capability:
Répartition des voles RF:

8. Emission Designator(s):
Identificateur(s) d'émission:

9. Frequency Tolerance:
Tolérance de fréquence:

10. Filter Employed — Yes / Oui ☐ — No / Non ☐
Filtre utilisé:

11. Spread Spectrum: — Yes / Oui ☐ — No / Non ☐
Spectre étalé:

12. Emission Bandwidth
Largeur de bande de l'émission:
☐ Calculated / Calculée ☐ Measured / Mesurée
(a) –3 dB _____
(b) –20 dB _____
(c) –40 dB _____
(d) –60 dB _____
(e) OCCBW _____
Largeur de bande occupée

13. Maximum Bit Rate:
Débit binaire maximal:

14. Modulation Techniques and Coding:
Techniques de modulation et de codage:

15. Maximum Modulation Frequency:
Fréquence de modulation et de codage:

16. Pre-emphasis: — Yes / Oui ☐ — No / Non ☐
Préaccentuation:

17. Deviation Ratio:
Rapport de déviation:

18. Pulse Characteristics:
Caractéristiques des impulsions:
(a) Rate – Fréq. de récurrence_____
(b) Width – Durée_____
(c) Rise Time – Temps de montée_____
(d) Fall Time – Temps de descente_____
(e) Comp Ratio – Rapport de comp._____
Largeur de bande occupée

19. Power – Puissance:
(a) Mean – Moyenne _____
(b) PEP – En crête_____

20. Output Device:
Dispositif de sortie:

21. Harmonic Level:
Niveau des harmoniques:
(a) 2nd – 2e_____
(b) 3rd – 3e_____
(c) Other – Autres_____

22. Spurious Level:
Niveau du rayonnement non essentiel:

23. Industry Canada Type Approval No.:
Nº d'homologation de l'industrie Canada:

24. Remarks:
Remarques:

3. Receiver Equipment Characteristics – Caractéristiques du matériel récepteur

1. Nomenclature, Manufacturer's Model No.:
Désignation, n° de modèle du fabricant:

2. Manufacturer's Name:
Nom du fabricant:

3. Receiver Installation:
Installation réceptrice:

4. Receiver Type:
Type de récepteur:

5. Tuning Range:
Gamme d'accord:

6. Method of Tuning:
Méthode d'accord:

7. RF Channelling Capability:
Répartition des voles RF:

8. Emission Designator(s):
Identificateur(s) d'émission:

9. Frequency Tolerance:
Tolérance de fréquence:

10. IF Selectivity: 1st 2nd 3rd
Sélectivité FI: 1ére 2e 3e
(a) –3 dB_____
(b) –20 dB_____
(c) –60 dB _____

12. RF Selectivity:
Sélectivité RF:
Calculated ☐ Measured ☐
Calculée Mesurée
(a) –3 dB _____
(b) –20 dB_____
(c) –40 dB_____

12. IF Frequency:
Fréquence intermédiaire:
(a) 1st – 1ére _____
(b) 2nd – 2e _____
(c) 3rd – 3e _____

13. DIMTPS 5 use only:
Réservé au DTPSGI 5:

14. DIMTPS 5 use only:
Réservé au DTPSGI 5:

15. Oscillator Tuned:
Oscillateur accordé:

	1st 1ére	2nd 2e	3rd 3e
(a) Above Tuned Frequency / Au-dessus de la fréq. d'accord	☐	☐	☐
(b) Below Tuned Frequency / Au-dessous de la fréq. d'accord	☐	☐	☐
(c) Either Above or Below the Frequency / Ou au-dessus ou au-dessous de la fréq.	☐	☐	☐

16. Maximum Bit Rate:
Débit binaire maximal:

17. Sensitivity:
Sensibilité:
(a) Sensitivity – Sensibilité_____dBm
(b) Criteria – Critère_____
(c) Noise Fig – Facteur de bruit_____ dB
(d) Noise Temp – Temp. de bruit_____Kelvin

18. De-emphasis: Yes ☐ No ☐
Désaccentuation: Oui Non

19. Image Rejection:
Rejet de fréquence image:

20. Spurious Rejection:
Rejet des fréquences parasites:

21. Remarks:
Remarques:

22. Industry Canada Type Approval No.:
N° d'homologation de l'industrie Canada:

4. Antenna Equipment Characteristics – Caractéristiques du matériel d'antenne

1. Transmitting / Émission ☐ Receiving / Réception ☐ Transmitting and Receiving / Émission et réception ☐

2. Nomenclature, Manufacturer's Model No.:
Désignation, nº de modèle du fabricant:

3. Manufacturer's Name:
Nom du fabricant:

4. Frequency Range:
Gamme de fréquences:

5. Type:

6. Polarization – Polarisation:

7. Scan Characteristics:
Caractéristiques de balayage:
- (a) Type_____
- (b) Vertical Scan:
  Balayage vertical:_____
  - (1) Max Elev
    Angle de site max._____
  - (2) Min Elev
    Angle de site min._____
  - (3) Scan Rate
    Vitesse de balayage_____
- (c) Horizontal Scan:
  Balayage horizontal:_____
  - (1) Sector Scanned
    Secteur balayé_____
  - (2) Scan Rate
    Vitesse de balayage_____
- (d) Sector Blanking / Effacement de secteur — Yes / Oui ☐ No / Non ☐

8. Gain:
- (a) Main Beam
  Faisceau principal_____
- (b) 1st Major Side Lobe
  1er lobe latéral important_____

9. Beamwidth :
Largeur du faisceau:
- (a) Horizontal_____
- (b) Vertical_____

10. Remarks:
Remarques:

Originator: Rédacteur:	Position:	Telephone Number: Numéro de téléphone:	Date:

INSTRUCTIONS FOR COMPLETING DND FORM 552

Classification. Enter classification and downgrading stamp. Indicate by check mark whether for Experimental Research or Exploratory Development, Advanced or Engineering Development, or Operational Utilization. The classification of the title should be appropriately indicated (e.g. (U), (C) or (S)). Classified information contained in the completed form should be indicated:

a) as a general statement in a Remarks block, such as, “The purpose, functions, operational use, frequency band, emission bandwidths, and power are classified X”;

b) by an enumeration of the applicable paragraphs and subparagraphs with their classifications; or

c) the classification may be marked alongside each entry on the form.

PART 1: EQUIPMENT USAGE

Part 1, Block 1: Nomenclature and Model Number

Provide nomenclature and equipment type (e.g. AN/FPS-16 Instrumentation Radar).

Part 1, Block 2: Status of Supportability Request

The supportability request will be for one of these purposes:

a. Experimental research or exploratory development:

(1) To test the feasibility of new techniques or concepts of natural phenomena and environment, and efforts towards solution of problems in the physical, behavioural and social sciences that have no direct military application; and

INSTRUCTIONS POUR REMPLIR LE FORMULAIRE DND 552

Classification. Entrer la classification et le déclassement. Indiquer par un crochet s’il s’agit d’une recherche expérimentale ou d’un développement préliminaire, d’un développement avancé ou d’ingénierie ou d’une utilisation opérationnelle. La classification du titre doit être indiquée convenablement (par exemple, (U), (C) ou (S)). L’information classifiée du formulaire rempli doit être signalée :

a) en tant qu’énoncé général dans le bloc Remarques tel que : « L’objet, les fonctions, l’utilisation opérationnelle, la bande de fréquences, les largeurs de bandes d’émission et la puissance sont classifiés X »;

b) par une énumération des paragraphes et des sous-paragraphes applicables accompagnés de leur classification; ou

c) la classification peut être indiquée à côté de chaque entrée du formulaire.

PARTIE 1 : UTILISATION DE L’ÉQUIPEMENT

Partie 1, Bloc 1 : Désignation et numéro de modèle

Inscrire la nomenclature et le type d’équipement (par exemple, radar d’instrumentation AN/FPS-16).

Partie 1, Bloc 2 : Statut de la demande de soutenabilité

La demande de soutenabilité de fréquences est faite pour l’un de ces buts :

a. Recherche expérimentale ou développement préliminaire :

(1) Pour vérifier la faisabilité de techniques ou de concepts nouveaux des phénomènes ou de l’environnement naturel et pour consacrer des efforts en vue de trouver une solution à des problèmes liés aux sciences physiques, comportementales et sociales qui n’ont aucune application militaire directe; et

(2) To test the feasibility of adapting conventional techniques to new purposes prior to projection into development planning. Includes all effort directed toward solution of specific military problems, short of major development projects.

b. Advanced or engineering development:

(1) to develop equipment which have moved into the development of hardware for experimental or operational test;

(2) to modify existing operational equipment for improved performance;

(3) to develop programs being engineered for service use, but have not yet been approved for production and service deployment; and

(4) to continue development of equipment/systems that have been approved for production and service use.

c. To operate and test equipment which have passed the development phase and are planned for operational use for:

(1) tactical and training purposes; or

(2) non-tactical purposes, such as for test range instrumentation.

Part 1, Block 3: Function and Purpose

Describe as specifically as possible the function and purpose to be performed. For example: guided missile control radar; troposcatter communications equipment; provides acquisition and tracking information; short range communications; telemetering for quality control.

Part 1, Block 4: Method of Operation

Describe the method of operation. For example: radar activates beacon transponder in missile with coded pulses; beacon provides missile track; radar

(2) Pour vérifier la faisabilité de l'adaptation de techniques conventionnelles aux nouveaux objectifs avant la projection dans la planification de développement. Cette démarche comprend tous les efforts consacrés à trouver la solution de problèmes militaires spécifiques, à l'exception des projets majeurs de développement.

b. Développement avancé ou d'ingénierie :

(1) pour développer de l'équipement qui s'est introduit dans le développement du matériel pour les essais expérimentaux ou opérationnels;

(2) pour modifier l'équipement opérationnel existant afin d'améliorer la performance;

(3) pour développer des programmes préparés pour l'usage militaire mais qui n'ont pas encore été approuvés pour la production et le déploiement militaire; et

(4) pour continuer le développement de systèmes et d'équipement qui ont été approuvés pour la production et l'usage militaire.

c. Pour exploiter et vérifier l'équipement qui a passé la phase du développement et dont l'utilisation opérationnelle est prévue pour :

(1) fins tactiques et de formation; ou

(2) fins non tactiques telle que l'instrumentation d'un champ de tir d'essai.

Partie 1, Bloc 3 : Fonction et but

Décrire aussi précisément que possible la fonction à exécuter et le but à atteindre. Par exemple : radar de contrôle de missile guidé; équipement de communication de diffusion troposphérique; fournit de l'information d'acquisition et de poursuite; communications à courte portée; télémétrie pour le contrôle de la qualité.

Partie 1, Bloc 4 : Mode de fonctionnement

Décrire le mode de fonctionnement. Par exemple : le radar actionne le transpondeur de la radiobalise dans le missile par des impulsions codées; la radiobalise détermine la piste de poursuite du missile; les radars transmettent aussi des signaux de

also transmits coded pulse command signals to missile beacon receiver for guidance.

Part 1, Block 5: Extent of Use

Describe operational extent of usage. For example: continuous or intermittent; expected duty cycle during mission; expected number of hours of operation per day or other appropriate time period. Indicate any conditions governing intermittent use. If appropriate, describe mission phase during which system operates.

Part 1, Block 6: Operational Environment

Give brief description of ultimate operational environment. For example: amphibious landing operations; defence of strategic target area; sea areas; field army. Provide any additional environmental factors pertinent to a meaningful assessment of electromagnetic compatibility, such as specific vehicle/platform types, expected mobility or other factors affecting the environment variability.

Part 1, Block 7: Geographical Area of Experimental Research or Developmental Evaluation

State the geographical area used for the experimental research or development.

Part 1, Block 8: Geographical Area of Operational Use

State the geographical area for potential use. Provide latitude and longitude of centre of operational area and radius of operation in kilometres.

Part 1, Block 9: Number of Equipment in Initial Phase

List number of equipment planned for experimental or developmental phase.

Part 1, Block 10: Number of Equipment Planned for Operational Use

List number of equipment planned for operational use.

commande codés au récepteur de la radiobalise du missile pour le guidage.

Partie 1, Bloc 5 : Étendue de l’utilisation

Décrire l’étendue opérationnelle de l’utilisation. Par exemple : continue ou intermittente; facteur d’utilisation prévu au cours de la mission; nombre d’heures d’exploitation prévues par jour ou autre période appropriée. Indiquer toute condition gouvernant l’utilisation intermittente. Décrire au besoin la phase de la mission durant laquelle le système fonctionne.

Partie 1, Bloc 6 : Milieu opérationnel

Donner une brève description du milieu opérationnel ultime. Par exemple : opérations amphibies de débarquement; défense d’une zone cible stratégique; zones maritimes; armée de campagne. Fournir tous les facteurs environnementaux supplémentaires pertinents à l’évaluation significative de la compatibilité électromagnétique, tels que les types particuliers de véhicules ou de plates-formes, la mobilité prévue ou les autres facteurs ayant un effet sur la variabilité de l’environnement.

Partie 1, Bloc 7 : Région géographique de la recherche expérimentale ou de l’évaluation du développement

Indiquer la région géographique qui sert à la recherche expérimentale ou au développement.

Partie 1, Bloc 8 : Région géographique de l’utilisation opérationnelle

Indiquer la région géographique de l’utilisation potentielle. Donner la latitude et la longitude du centre de la zone opérationnelle et le rayon d’opération en kilomètres.

Partie 1, Bloc 9 : Nombre d’appareils pendant la phase initiale

Indiquer le nombre d’appareils prévus pour la phase expérimentale ou de développement.

Partie 1, Bloc 10 : Nombre d’appareils prévus pour l’utilisation opérationnelle

Indiquer le nombre d’appareils prévus pour l’utilisation opérationnelle.

Part 1, Block 11: Number of These Equipment Operating Simultaneously in the Same Electromagnetic Environment

Indicate maximum number of these systems that will be operating simultaneously in the same environment. For example: three (3) missiles will be flown simultaneously in an operating area.

Part 1, Block 12: Target Date for the Start and End of Experimental or Developmental Evaluation

Indicate the dates on which it is expected that the experimental or developmental phase will start and finish.

Part 1, Block 13: Target Date for Operational Use

Indicate target date for operational use.

Part 1, Block 14: Previous DND 552 Application Number

For DIMTPS 5 use only.

Partie 1, Bloc 11 : Nombre d'appareils fonctionnant simultanément dans le même milieu électromagnétique

Indiquer le nombre maximal d'appareils fonctionnant simultanément dans le même environnement. Par exemple : trois (3) missiles voleront simultanément dans la zone opérationnelle.

Partie 1, Bloc 12 : Date prévue pour le commencement et la fin de l'évaluation expérimentale ou de l'évaluation du développement

Indiquer les dates auxquelles il est prévu que la phase expérimentale ou de développement débutera et se terminera.

Partie 1, Bloc 13 : Date prévue d'utilisation opérationnelle

Indiquer la date prévue pour l'utilisation opérationnelle.

Partie 1, Bloc 14 : Numéro de demande de l'ancien formulaire DND 552

À l'usage exclusif du DTPSGI 5.

PART 2: TRANSMITTER EQUIPMENT CHARACTERISTICS

Part 2, Block 1: Nomenclature, Manufacturer's Model No.

Enter the Government assigned alphanumeric equipment designation. If not available, enter the manufacturer's model number (e.g. MIT 502), and indicate Manufacturer's Name (Part 2, block 2). If this too is not available, enter a short descriptive title (e.g. ATS-6 Telemetry Transmitter).

Part 2, Block 2: Manufacturer's Name

Enter the manufacturer's name, if available. If a manufacturer's model number is listed in Nomenclature (Part 2, block 1), this block must be completed.

Part 2, Block 3: Transmitter Installation

List specific types of vehicles, ships, planes or buildings, etc., where the transmitters will be installed.

Part 2, Block 4: Transmitter Type

Enter the generic name of the transmitter (e.g. Frequency Scan, Scan While Track Radar, Monopulse Tracker, AM or PM Communications). In addition, for radar enter the radar type (e.g. Non-FM Pulse, FM Pulse, Frequency Hopping, CW or FM-CW).

Part 2, Block 5: Tuning Range

Enter the frequency range through which the transmitter is capable of being tuned (e.g. 225 to 400 MHz). For equipment designed to operate only at a single frequency, enter that frequency. Include units (e.g. kHz, MHz or GHz).

Part 2, Block 6: Method of Tuning

Enter the method of tuning (e.g. crystal, synthesizer or cavity). If the equipment is not readily tuneable in the field, indicate in Remarks (Part 2, block 24) the complexity of tuning. Include complexity factors such as skill levels involved, major assemblies

PARTIE 2 : CARACTÉRISTIQUES DE L'ÉQUIPEMENT ÉMETTEUR

Partie 2, Bloc 1 : Désignation, n° de modèle du fabricant

Indiquer la désignation alphanumérique de l'équipement désigné par le gouvernement. S'il n'est pas disponible, indiquer le numéro du modèle du fabricant (par exemple, MIT 502) et indiquer le nom du fabricant (partie 2, bloc 2). Si ces renseignements ne sont également pas disponibles, indiquer un court titre descriptif (par exemple, émetteur de télémétrie ATS-6).

Partie 2, Bloc 2 : Nom du fabricant

Indiquer le nom du fabricant s'il est disponible. Si le numéro du modèle du fabricant est indiqué à la partie 2, bloc 1, ce bloc doit être rempli.

Partie 2, Bloc 3 : Installation émettrice

Indiquer les types spécifiques de véhicules, de navires, d'aéronefs ou de bâtiments, etc., où les émetteurs seront installés.

Partie 2, Bloc 4 : Type d'émetteur

Indiquer le nom générique de l'émetteur (par exemple, balayage de fréquences, radar de poursuite sur informations discontinues, traqueur monopulse, communications AM ou PM). De plus, pour les radars, indiquer le type du radar (par exemple, à impulsions autres que FM, à impulsions FM, à sauts de fréquence, à ondes continues ou à FM-CW).

Partie 2, Bloc 5 : Gamme d'accord

Indiquer la gamme de fréquences sur laquelle l'émetteur peut être accordé (par exemple, de 225 à 400 MHz). Indiquer la fréquence dans le cas de l'équipement conçu pour fonctionner seulement à une seule fréquence. Indiquer les unités (par exemple, kHz, MHz ou GHz).

Partie 2, Bloc 6 : Méthode d'accord

Indiquer la méthode d'accord (par exemple, quartz, synthétiseur ou cavité). Si l'équipement ne peut être accordé facilement sur le terrain, indiquer dans le bloc Remarques (partie 2, bloc 24) la complexité de l'accord. Inclure les facteurs de

involved, time required, and location (factory or depot) where equipment is to be tuned.

complexité tels que les niveaux de compétence nécessaires, les ensembles principaux nécessaires, le temps nécessaire et l'emplacement (usine ou dépôt) où l'équipement doit être accordé.

Part 2, Block 7: RF Channelling Capability

Describe the RF channelling capability:

a. for uniformly spaced channels, enter the centre frequency of the first channel and channel spacing (e.g. first channel 406 MHz, 100 kHz increments);

b. for continuous tuning, enter the lowest frequency and the word "continuous"; and

c. for others, such as SSB or cases where channel selection is under software control, enter a detailed description in Remarks (Part 2 block 24, e.g. degraded channels, internal hardwiring limitations or lockout capability for frequency hopping systems).

Partie 2, Bloc 7 : Répartition des canaux RF

Décrire la répartition des canaux RF :

a. pour indiquer la fréquence centrale du premier canal et l'espacement des canaux (par exemple, premier canal à 406 MHz avec incréments de 100 kHz) dans le cas des canaux uniformément espacés;

b. pour indiquer la plus basse fréquence et le mot « continu » dans le cas de l'accord continu; et

c. pour les autres, tels que BLU ou les cas où la sélection du canal est commandée par logiciel, entrer une description détaillée (par exemple, canaux dégradés, limitations internes de câblage ou capacité de verrouillage pour les systèmes à sauts de fréquence) dans le bloc Remarques (partie 2, bloc 24).

Part 2, Block 8: Emission Designators

Enter the emission designators, including the necessary bandwidth, for each designator, in accordance with Appendix D3 (e.g. 16K0F3E). For systems with a frequency hopping mode as well as a non-hopping mode, enter the emission designators for each mode. Identify each mode as hopping or non-hopping.

Partie 2, Bloc 8 : Identificateur(s) d'émission

Indiquer le ou les identificateurs d'émission, y compris la largeur de bande nécessaire pour chaque identificateur conformément au contenu de l'appendice D3 (par exemple, 16K0F3E). Entrer les identificateurs d'émission de chaque mode dans le cas des systèmes avec un mode à sauts de fréquence ainsi que ceux avec un mode sans sauts de fréquence. Identifier chaque mode comme étant à sauts ou sans sauts.

Part 2, Block 9: Frequency Tolerance

Enter the frequency tolerance (i.e. the maximum departure of a transmitter from its assigned frequency after normal warm-up time). Indicate the units in parts per million (ppm) for all emission types except single sideband, which must be indicated in Hertz (Hz).

Partie 2, Bloc 9 : Tolérance de fréquence

Indiquer la tolérance de fréquence (c'est-à-dire, l'écart maximal d'un émetteur de sa fréquence assignée après le temps de réchauffement normal). Indiquer les unités en parties par million (ppm) pour tous les types d'émissions sauf la bande latérale unique, qui doit être indiquée en hertz (Hz).

Part 2, Block 10: Filter Employed

Check the appropriate box.

Partie 2, Bloc 10 : Filtre utilisé

Cocher la case appropriée.

Part 2, Block 11: Spread Spectrum

Check the appropriate box. If “Yes”, refer to instructions for Modulation (Part 2, block 14).

Part 2, Block 12: Emission Bandwidth

Enter the emission bandwidths for which the transmitter is designed at the -3, -20 and -60 dB levels and the occupied bandwidth. For pulse radar transmitters the bandwidth at -40 dB must also be entered. The emission bandwidth is defined as the bandwidth appearing at the antenna terminals and includes any significant attenuation contributed by filtering in the output circuit or transmission lines. Values of emission bandwidth specified should be indicated as calculated or measured, by checking the appropriate box. If calculated, the methods used must be in accordance with Industry Canada TRC 43, which is available on the Internet. Indicate units used (e.g. Hz, kHz or MHz). Note that the occupied bandwidth (block 12[e]) is defined as the width of the frequency bandwidth such that, below its lower and above its upper limits, the mean power radiated is each equal to 0.5% of the total mean power radiated.

Part 2, Block 13: Maximum Bit Rate

Enter the maximum information bit rate for digital equipment, in bits per second (bps). If spread spectrum is used, enter the bit rate after encoding.

Part 2, Block 14: Modulation Techniques and Coding

Describe in detail the modulation and coding techniques employed. For complex modulation schemes, such as direct sequence spread spectrum, frequency hopping or frequency agile, provide information relating to the hop rate, processing gain, clock rate, pre-defined hop sets and frequencies, minimum required number of frequencies per hop set, notching capability, etc. If too lengthy, use Remarks (Part 2, block 24).

Partie 2, Bloc 11 : Spectre étalé

Cocher la case appropriée. Se reporter aux instructions pour remplir le bloc Modulation (partie 2, bloc 14) si la case « Oui » est cochée.

Partie 2, Bloc 12 : Largeur de bande de l’émission

Indiquer les largeurs de bandes d’émissions pour lesquelles l’émetteur est conçu aux niveaux de -3, -20 et -60 dB et la largeur de bande occupée. Pour les émetteurs radars à impulsions, la largeur de bande de -40 dB doit aussi être indiquée. La largeur de bande d’émission est définie comme étant la largeur de bande apparaissant aux bornes de l’antenne et comprend toute atténuation concrète contribuée par le filtrage des circuits de sortie ou des lignes de transmission. Les valeurs des largeurs de bandes d’émission spécifiées doivent être indiquées telles qu’elles sont calculées ou mesurées en cochant la case appropriée. Si les valeurs sont calculées, les méthodes utilisées doivent être conformes aux indications de la Circulaire de la réglementation des télécommunications 43 (CRT 43) d’Industrie Canada disponibles sur l’Internet. Indiquer les unités utilisées (par exemple, Hz, kHz ou MHz). Remarquer que la largeur de bande occupée (bloc 12e) est définie comme étant la largeur de la bande de fréquence telle que, sous sa limite inférieure et au-dessus de sa limite supérieure, la puissance moyenne rayonnée de chacune est égale à 0.5 % de la puissance moyenne rayonnée totale.

Partie 2, Bloc 13 : Débit binaire maximal

Indiquer le débit binaire maximal en bits par seconde (bps) pour l’équipement numérique. Indiquer le débit binaire après le codage si l’étalement du spectre est utilisé.

Partie 2, Bloc 14 : Techniques de modulation et de codage

Décrire en détail les techniques de modulation et de codage utilisées. Dans le cas des formules complexes de modulation, telles que l’étalement du spectre en ordre direct, à sauts de fréquence ou à agilité de fréquence, fournir de l’information se rapportant aux taux de sauts, aux gains de traitement, à la fréquence d’horloge, aux ensembles de sauts et de fréquences prédéfinis, au nombre minimal nécessaire de fréquences par ensemble de sauts, à la

capacité d'absorption, etc. Utiliser le bloc Remarques (partie 2, bloc 24) si le contenu est trop long.

Part 2, Block 15: Maximum Modulation Frequency

Enter the maximum modulation or baseband frequency for a frequency or phase-modulated transmitter. This is assumed to be the frequency at the -3 dB point on the high frequency side of the modulator response curve. Indicate the units (e.g. Hz, kHz or MHz).

Partie 2, Bloc 15 : Fréquence maximale de modulation

Indiquer la fréquence maximale de modulation ou de bande de base pour un émetteur modulé en fréquence ou en phase. Il est tenu pour acquis qu'il s'agit de la fréquence au point de -3 dB du côté haute fréquence de la courbe de réponse du modulateur. Indiquer les unités (par exemple, Hz, kHz ou MHz).

Part 2, Block 16: Pre-emphasis

For frequency or phase-modulated transmitters, check the appropriate box to indicate whether pre-emphasis is available.

Partie 2, Bloc 16 : Préaccentuation

Cocher la case appropriée pour indiquer si la préaccentuation est disponible dans le cas des émetteurs modulés en fréquence ou en phase.

Part 2, Block 17: Deviation Ratio

For frequency or phase modulated transmitters, enter the deviation ratio, computed as follows:

$$\text{Deviation Ratio} = \frac{\text{Maximum Frequency Deviation}}{\text{Maximum Modulation Frequency}}$$

Partie 2, Bloc 17 : Rapport de déviation

Indiquer le rapport de déviation calculé de la façon suivante dans le cas des émetteurs modulés en fréquence ou en phase :

$$\text{Rapport de déviation} = \frac{\text{Déviation maximale de la fréquence}}{\text{Fréquence maximale de modulation}}$$

Part 2, Block 18: Pulse Characteristics

For pulse modulated transmitters:

a. enter the pulse repetition rate, in pulses per second (pps);

b. enter the pulse width at the half voltage levels, in microseconds (µsec);

c. enter the pulse rise time, in microseconds (µsec). This is the time required for the leading edge of the voltage pulse to rise from 10% to 90% of its peak amplitude;

d. enter the pulse fall time, in microseconds (µsec). This is the time required for the trailing edge of the voltage pulse to fall from 90% to 10% of its peak amplitude; and

e. enter the maximum pulse compression ratio, if applicable.

Partie 2, Bloc 18 : Caractéristiques des impulsions

Pour les émetteurs modulés par impulsions :

a. indiquer la fréquence de récurrence d'impulsions en impulsions par seconde (pps);

b. indiquer la largeur d'impulsions aux niveaux de demi-tension en microsecondes (µsec);

c. indiquer le temps de montée de l'impulsion en microsecondes (µsec); C'est le temps nécessaire au flanc avant de l'impulsion de tension pour monter de 10 % à 90 % de son amplitude de crête;

d. indiquer le temps de descente de l'impulsion en microsecondes (µsec); C'est le temps nécessaire au flanc arrière de l'impulsion de tension pour descendre de 90% à 10% de son amplitude de crête; et

e. indiquer le rapport maximal de compression de l'impulsion s'il s'applique.

For coded pulse waveforms refer to instructions for Modulation (Part 2, block 14).

Part 2, Block 19: Power

Enter the mean power delivered to the antenna terminals for all AM and FM emissions, or the peak envelope power (PEP) for all other classes of emissions. If there are any unique situations, such as interrupted CW, provide details in Remarks (Part 2, block 24). Indicate the units (e.g. W or kW).

Part 2, Block 20: Output Device

Enter a description of the device used in the transmitter output stage (e.g. ceramic diode, reflex klystron, transistor or TWT).

Part 2, Block 21: Harmonic Level

Enter the harmonic level of the second and third harmonics, in dB, relative to the fundamental. Enter in “other” (block 21[c]) the relative level, in dB, of the highest power harmonic above the third.

Part 2, Block 22: Spurious Level

Enter the maximum value of spurious emission, in dB, relative to the fundamental, which occurs outside the -60 dB point on the transmitter fundamental emission spectrum (Part 2, block 12) and does not occur on a harmonic of the fundamental frequency. Indicate, in kHz or MHz, the location of the spurious emission from the fundamental frequency.

Part 2, Block 23: Industry Canada Type Approval No.

Enter the Industry Canada type approval number, if applicable.

Part 2, Block 24: Remarks

Self-explanatory. Use additional pages if necessary.

Se reporter aux instructions pour remplir le bloc Modulation (partie 2, bloc 14) s’il s’agit de formes d’ondes d’impulsions codées.

Partie 2, Bloc 19 : Puissance

Indiquer la puissance moyenne alimentée aux bornes de l’antenne pour toutes les émissions AM et FM, ou la puissance en crête de modulation pour toutes les autres classes d’émissions. Donner les détails dans le bloc Remarques (partie 2, bloc 24) s’il y a des situations uniques telles que des CW interrompues. Indiquer les unités (par exemple, W ou kW).

Partie 2, Bloc 20 : Dispositif de sortie

Entrer une description du dispositif utilisé à l’étage de sortie de l’émetteur (par exemple, diode céramique, klystron réflex, transistor ou TOP).

Partie 2, Bloc 21 : Niveau des harmoniques

Indiquer, en dB, le niveau des harmoniques de la deuxième et de la troisième harmonique par rapport à la fréquence fondamentale. Indiquer sous « Autre » (bloc 21[c]) le niveau de puissance relatif, en dB, des plus hautes harmoniques au-dessus de la troisième.

Partie 2, Bloc 22 : Niveau du rayonnement non essentiel

Indiquer la valeur maximale du rayonnement non essentiel, en dB, relativement à la fréquence fondamentale, qui se produit à l’extérieur du point de -60 dB sur le spectre d’émission fondamentale de l’émetteur (partie 2, bloc 12) et qui ne se produit pas sur une harmonique de la fréquence fondamentale. Indiquer, en kHz ou en MHz, l’emplacement du rayonnement non essentiel de la fréquence fondamentale.

Partie 2, Bloc 23 : N° du type approuvé d’Industrie Canada

Indiquer, s’il y a lieu, le numéro du type approuvé d’Industrie Canada.

Partie 2, Bloc 24 : Remarques

Suffisamment explicite. Utiliser au besoin des pages supplémentaires.

PART 3: RECEIVER EQUIPMENT CHARACTERISTICS

Part 3, Block 1: Nomenclature, Manufacturer's Model No.

Enter the Government assigned alphanumeric equipment designation. If not available, enter the manufacturer's model number (e.g. MIT 502) and complete Manufacturer's Name (Part 3, block 2). If this too is not available, enter a short descriptive title (e.g. GPS Receiver). A separate receiver submission is required for each receiver in a complex system (e.g. radar ECCM receivers).

Part 3, Block 2: Manufacturer's Name

Enter the manufacturer's name, if available. If a manufacturer's model number is listed in Nomenclature (Part 3, block 1), this block must be completed.

Part 3, Block 3: Receiver Installation

List specific types of vehicles, ships, planes or buildings, etc., where the receivers will be installed.

Part 3, Block 4: Receiver Type

Enter the generic class (e.g. Dual Conversion Superheterodyne or Homodyne).

Part 3, Block 5: Tuning Range

Enter the frequency range through which the receiver is capable of being tuned (e.g. 225 to 400 MHz). For equipment designed to operate only at a single frequency, enter that frequency. Include units (e.g. kHz, MHz or GHz).

Part 3, Block 6: Method of Tuning

Enter the method of tuning (e.g. crystal, synthesizer or cavity). If the equipment is not readily tuneable in the field, indicate in Remarks (Part 3, block 21) the complexity of tuning. Include complexity factors such as skill levels involved, major assemblies involved, time required, and location (factory or depot) where equipment is to be tuned.

PARTIE 3 : CARACTÉRISTIQUES DE L'ÉQUIPEMENT RÉCEPTEUR

Partie 3, Bloc 1 : Désignation, n° de modèle du fabricant

Indiquer la désignation alphanumérique de l'équipement désigné par le gouvernement. S'il n'est pas disponible, indiquer le numéro du modèle du fabricant (par exemple, MIT 502) et indiquer le nom du fabricant (partie 3, bloc 2). Si ces renseignements ne sont également pas disponibles, indiquer un court titre descriptif (par exemple, récepteur GPS). Une soumission de récepteur distincte est nécessaire pour chaque récepteur d'un système complexe (par exemple, récepteurs radars de CCME).

Partie 3, Bloc 2 : Nom du fabricant

Indiquer le nom du fabricant s'il est disponible. Si le numéro du modèle du fabricant est indiqué à la partie 3, bloc 1, ce bloc doit être rempli.

Partie 3, Bloc 3 : Installation réceptrice

Indiquer les types spécifiques de véhicules, de navires, d'aéronefs ou de bâtiments, etc., où les récepteurs seront installés.

Partie 3, Bloc 4 : Type de récepteur

Indiquer la classe générique (par exemple, superhétérodyne à double changement de fréquence ou homodyne).

Partie 3, Bloc 5 : Gamme d'accord

Indiquer la gamme de fréquences sur laquelle le récepteur peut être accordé (par exemple, de 225 à 400 MHz). Indiquer la fréquence dans le cas de l'équipement conçu pour fonctionner seulement à une seule fréquence. Indiquer les unités (par exemple, kHz, MHz ou GHz).

Partie 3, Bloc 6 : Méthode d'accord

Indiquer la méthode d'accord (par exemple, quartz, synthétiseur ou cavité). Si l'équipement ne peut être accordé facilement sur le terrain, indiquer dans le bloc Remarques (partie 3, bloc 21) la complexité de l'accord. Inclure les facteurs de complexité tels que les niveaux de compétence nécessaires, les ensembles principaux nécessaires, le

Part 3, Block 7: RF Channelling Capability

Describe the RF channelling capability:

a. for uniformly spaced channels, enter the centre frequency of the first channel and the channel spacing (e.g. first channel 406 MHz, 100 kHz increments);

b. for continuous tuning, enter the lowest frequency and the word “continuous”; and

c. for others, including cases where channel selection is under software control, enter a detailed description in Remarks (Part 3, block 21).

Part 3, Block 8: Emission Designators

Enter the emission designators, including the necessary bandwidth, for each designator, in accordance with Appendix D3 to this publication (e.g. 16K0F3E). For systems with a frequency hopping mode as well as a non-hopping mode, enter the emission designators for each mode. Identify each mode as hopping or non-hopping.

Part 3, Block 9: Frequency Tolerance

Enter the frequency tolerance (i.e., the maximum departure of a receiver from its assigned frequency after normal warm-up). Indicate the magnitude, in ppm, for all emission types except single sideband, which must be indicated in Hertz (Hz).

Part 3, Block 10: IF Selectivity

Enter the bandwidth for each IF stage at the -3, -20 and -60 dB levels. Indicate units (e.g. kHz or MHz).

Part 3, Block 11: RF Selectivity

Enter the bandwidth at the -3, -20 and -60 dB levels. The RF bandwidth includes any significant attenuation contributed by filtering in the input circuit or transmission line. Values of RF bandwidth specified

temps nécessaire et l’emplacement (usine ou dépôt) où l’équipement doit être accordé.

Partie 3, Bloc 7 : Répartition des canaux RF

Décrire la répartition des canaux RF :

a. pour indiquer la fréquence centrale du premier canal et l’espacement des canaux (par exemple, premier canal à 406 MHz avec incréments de 100 kHz) dans le cas des canaux uniformément espacés;

b. pour indiquer la plus basse fréquence et le mot « continu » dans le cas de l’accord continu;

c. pour les autres, y compris les cas où la sélection du canal est commandée par logiciel, entrer une description détaillée dans le bloc Remarques (partie 3, bloc 21).

Partie 3, Bloc 8 : Identificateur(s) d’émission

Indiquer le ou les identificateurs d’émission, y compris la largeur de bande nécessaire pour chaque identificateur conformément au contenu de l’appendice D3 de la présente publication (par exemple, 16K0F3E). Entrer les identificateurs d’émission de chaque mode dans le cas des systèmes avec un mode à sauts de fréquence ainsi que ceux avec un mode sans sauts de fréquence. Identifier chaque mode comme étant à sauts ou sans saut.

Partie 3, Bloc 9 : Tolérance de fréquence

Indiquer la tolérance de fréquence (c’est-à-dire, l’écart maximal d’un récepteur de sa fréquence assignée après le temps de réchauffement normal). Indiquer la magnitude en ppm pour tous les types d’émissions sauf la bande latérale unique, qui doit être indiquée en hertz (Hz).

Partie 3, Bloc 10 : Sélectivité FI

Indiquer la largeur de bande pour chaque étage FI aux niveaux de -3, -20 et -60 dB. Indiquer les unités (par exemple, kHz ou MHz).

Partie 3, Bloc 11 : Sélectivité RF

Indiquer la largeur de bande aux niveaux de -3, -20 et -60 dB. La largeur de bande RF comprend toute atténuation concrète contribuée par le filtrage dans le circuit d’entrée ou dans la ligne de transmission. Les

should be indicated as calculated or measured by checking the appropriate box. Indicate units (e.g. kHz or MHz). Enter the preselection type (e.g. tuneable cavity).

Part 3, Block 12: IF Frequency

Enter the tuned frequency of the first, second and third IF stages. Indicate units (e.g. kHz or MHz).

Part 3, Block 13: DIMTPS 5 Use Only

Intentionally left blank to match the US form.

Part 3, Block 14: DIMTPS 5 Use Only

Intentionally left blank to match the US form.

Part 3, Block 15: Oscillator Tuned

Check the appropriate box to indicate the location of the first, second and third oscillator frequencies with respect to the associated mixer input signal.

Part 3, Block 16: Maximum Bit Rate

Where applicable, enter the maximum bit rate (bps) that can be used. If spread spectrum is used, enter the bit rate after decoding. Describe any error detecting/correcting codes under Remarks (Part 3, block 21).

Part 3, Block 17: Sensitivity

Complete as follows:

a. enter the sensitivity in dBm;

b. specify criteria used (e.g. 12 dB SINAD, where SINAD is (Signal + Noise + Distortion) /(Noise + Distortion);

c. if the receiver is used with terrestrial systems, enter the receiver noise figure in dB; and

valeurs de la largeur de bandes RF spécifiées doivent être indiquées telles qu'elles sont calculées ou mesurées en cochant la case appropriée. Indiquer les unités (par exemple, kHz ou MHz). Indiquer le type de présélection (par exemple, cavité accordable).

Partie 3, Bloc 12 : Fréquence FI

Indiquer la fréquence accordée du premier, du deuxième et du troisième étage FI. Indiquer les unités (par exemple, kHz ou MHz).

Partie 3, Bloc 13 : À l'usage exclusif du DTPSGI 5

Bloc laissé intentionnellement vide pour s'apparier au formulaire américain.

Partie 3, Bloc 14 : À l'usage exclusif du DTPSGI 5

Bloc laissé intentionnellement vide pour s'apparier au formulaire américain.

Partie 3, Bloc 15 : Oscillateur accordé

Cocher la case appropriée pour indiquer la valeur de la première, de la deuxième et de la troisième fréquence de l'oscillateur par rapport au signal d'entrée du mélangeur connexe.

Partie 3, Bloc 16 : Débit binaire maximal

S'il y a lieu, indiquer le débit binaire maximal (bps) qui peut être utilisé. Indiquer le débit binaire après le décodage si le spectre étalé est utilisé. Décrire tout code de détection ou de correction sous Remarques (partie 3, bloc 21).

Partie 3, Bloc 17 : Sensibilité

Remplir de la façon suivante :

a. indiquer la sensibilité en dBm;

b. spécifier le critère utilisé (par exemple, SINAD de 12 dB, SINAD étant (signal + bruit + distorsion)/(bruit + distorsion);

c. indiquer la valeur de bruit du récepteur en dB si le récepteur est utilisé avec les systèmes terrestres; et

d. if the receiver is used with space or satellite earth stations, enter the receiver noise figure in Kelvin.

Part 3, Block 18: De-emphasis

For frequency or phase-modulated receivers, indicate whether de-emphasis is available.

Part 3, Block 19: Image Rejection

Enter the image rejection in dB. Image ejection is the ratio of the image frequency signal level required to produce a specified output to the desired signal level required to produce the same output.

Part 3, Block 20: Spurious Frequency Rejection

Enter the spurious frequency rejection in dB. Enter the single level of spurious frequency rejection that the receiver meets or exceeds at all frequencies outside the -60 dB IF bandwidth. Spurious frequency rejection is the ratio of a particular out-of-band frequency signal level required to produce a specified output, to the desired signal level required to produce the same output.

Part 3, Block 21: Remarks

Self-explanatory. Use additional pages if necessary.

Part 3, Block 22: Industry Canada Type Approval No.

Enter the Industry Canada type approval number, if applicable.

d. indiquer la valeur de bruit du récepteur en degrés Kelvin si le récepteur est utilisé avec les stations satellites spatiales ou terrestres.

Partie 3, Bloc 18 : Désaccentuation

Cocher la case appropriée pour indiquer si la désaccentuation est disponible dans le cas des récepteurs modulés en fréquence ou en phase.

Partie 3, Bloc 19 : Rejet de fréquence image

Indiquer le rejet de fréquence image en dB. Le rejet de fréquence image est le rapport du niveau signal de fréquence image nécessaire pour produire une sortie spécifiée au niveau désiré de signal nécessaire pour produire la même sortie.

Partie 3, Bloc 20 : Rejet des fréquences non essentielles

Indiquer le rejet des fréquences non essentielles en dB. Indiquer le niveau unique du rejet des fréquences non essentielles que le récepteur rencontre ou dépasse à toutes les fréquences à l’extérieur de la largeur de bande FI de -60 dB. Le rejet de fréquences non essentielles est le rapport d’un niveau de signal de fréquence hors bande nécessaire pour produire une sortie spécifiée au niveau de signal désiré nécessaire pour produire la même sortie.

Partie 3, Bloc 21 : Remarques

Suffisamment explicite. Utiliser au besoin des pages supplémentaires.

Partie 3, Bloc 22 : N° du type approuvé d’Industrie Canada

Indiquer, s’il y a lieu, le numéro du type approuvé d’Industrie Canada.

PART 4: ANTENNA EQUIPMENT CHARACTERISTICS

Part 4, Block 1: Antenna Type

Check the appropriate box to indicate the type of antenna. For multiantenna systems use a separate Part 4 form for each antenna.

Part 4, Block 2: Nomenclature, Manufacturer's Model No.

Enter the Government assigned alphanumeric equipment designation. If not available, enter the manufacturer's model number (e.g. DS6558) and indicate Manufacturer's Name (Part 4, block 3). If this too is not available, enter a short descriptive title (e.g. ATS-6 Telemetry Antenna).

Part 4, Block 3: Manufacturer's Name

Enter the manufacturer's name, if available. If a manufacturer's model number is given in Nomenclature (Part 4, block 2), this block must be completed.

Part 4, Block 4: Frequency Range

Enter the range of frequencies for which the antenna is designed. Indicate units (e.g. kHz or MHz).

Part 4, Block 5: Type

Enter the generic name or describe the general technical features (e.g. Horizontal, Log Periodic, Cassegrain with Polarization Twisting, Whip, Phased Array or Conformal Array). To the extent possible, use the standard antenna configuration given in Appendix D1, Figure D1-1.

Part 4, Block 6: Polarization

Enter the polarization. If circular, indicate whether it is left or right handed.

PARTIE 4 : CARACTÉRISTIQUES DE L'ÉQUIPEMENT D'ANTENNE

Partie 4, Bloc 1 : Type d'antenne

Cocher la case appropriée pour indiquer le type d'antenne. Utiliser un formulaire distinct pour chaque antenne dans le cas des systèmes à plusieurs antennes.

Partie 4, Bloc 2 : Désignation, n° de modèle du fabricant

Indiquer la désignation alphanumérique de l'équipement désigné par le gouvernement. S'il n'est pas disponible, indiquer le numéro du modèle du fabricant (par exemple, DS6558) et indiquer le nom du fabricant (partie 4, bloc 3). Si ces renseignements ne sont pas non plus disponibles, indiquer un court titre descriptif (par exemple, antenne de télémétrie ATS-6).

Partie 4, Bloc 3 : Nom du fabricant

Indiquer le nom du fabricant s'il est disponible. Si le numéro du modèle du fabricant est indiqué à la partie 4, bloc 2, ce bloc doit être rempli.

Partie 4, Bloc 4 : Gamme de fréquences

Indiquer la gamme de fréquences pour laquelle l'antenne est conçue. Indiquer les unités (par exemple, kHz ou MHz).

Partie 4, Bloc 5 : Type

Indiquer le nom générique ou décrire les caractéristiques techniques générales (par exemple, horizontale, log-périodique, Cassegrain avec torsion de polarisation, fouet, réseau à commande de phase ou réseau conforme). Utiliser, dans la mesure du possible, les configurations normalisées d'antenne indiquées à l'appendice D1, figure D1-1.

Partie 4, Bloc 6 : Polarisation

Indiquer la polarisation. Si elle est circulaire, indiquer si elle est orientée à gauche ou à droite.

Part 4, Block 7: Scan Characteristics

Complete as follows:

a. If the antenna scans, enter the type of scanning (e.g. vertical, horizontal, vertical and horizontal);

b. Vertical Scan:

(1) enter the maximum elevation angle, in degrees (positive or negative, referenced to the horizontal), that the antenna can scan;

(2) enter the minimum elevation angle, in degrees (positive or negative, referenced to the horizontal), that the antenna can scan; and

(3) enter the vertical scanning rate, in scans per minute.

c. Horizontal Scan:

(1) enter the angular scanning range, in degrees, of the horizontal sector scanned; and

(2) enter the horizontal scan rate, in scans per minute.

d. Indicate if antenna is capable of being sector blanked. If “yes”, enter details in Remarks (Part 4, block 10b.).

Partie 4, Bloc 7 : Caractéristiques de balayage

Remplir de la façon suivante :

a. Indiquer le type de balayage (par exemple, vertical, horizontal, vertical et horizontal) si l’antenne balaye;

b. Balayage vertical :

(1) indiquer l’angle de site maximal en degrés (positif ou négatif, par rapport à l’horizontal) auquel l’antenne peut balayer;

(2) indiquer l’angle minimal d’élévation en degrés (positif ou négatif, par rapport à l’horizontal) auquel l’antenne peut balayer; et

(3) indiquer la cadence de balayage vertical en balayages par minute.

c. Balayage horizontal :

(1) indiquer la portée angulaire de balayage, en degrés, du secteur horizontal balayé; et

(2) indiquer la cadence de balayage horizontal en balayages par minute.

d. Indiquer si l’antenne est dotée de l’effacement de secteur. Entrer les détails sous Remarques (partie 4, bloc 10b.) si la case « Oui » est cochée.

Part 4, Block 8: Gain

If frequency is between 27.5 MHz and 890 MHz, indicate gain of radiator relative to half wave dipole (dB). If frequency is below 27.5 MHz or above 890 MHz, indicate gain of radiator relative to an isotropic radiator (dBi).

a. enter the maximum gain, in dB; and

b. enter the nominal gain of the first major side lobe, in dB, and the angular displacement from the main beam, in degrees.

Partie 4, Bloc 8 : Gain

Indiquer le gain de l’antenne active par rapport à l’antenne de type doublet demi-onde (en dB) si la fréquence est entre 27.5 MHz et 890 MHz. Indiquer le gain de l’antenne active par rapport à une antenne isotrope (en dB) si la fréquence est au dessous de 27.5 MHz ou au-dessus de 890 MHz.

a. indiquer le gain maximal en dB; et

b. indiquer le gain nominal du premier lobe latéral principal en dB et le déplacement angulaire à partir du faisceau principal en degrés.

Part 4, Block 9: Beamwidth

Enter the 3 dB beam width in degrees.

Part 4, Block 10: Remarks

Describe any unusual characteristics of the antenna, particularly as they relate to the assessment of electromagnetic compatibility and to amplify or clarify any of the information provided above. Use additional pages if necessary. In addition, enter the following information, if applicable:

a. the front-back ratio, in dB, for directional antennas used in radio relay circuits;

b. for phased array antennas enter:

(1) mode of operation, single or multiple beam;

(2) single beam parameters; and

(3) multiple beam parameters:

a) polarization of each beam;

b) gain of each beam;

c) beam width of each beam; and

d) scan characteristics of each beam (Part 4, block 7).

Partie 4, Bloc 9 : Largeur du faisceau

Indiquer la largeur du faisceau à 3 dB en degrés.

Partie 4, Bloc 10 : Remarques

Se servir de ce bloc pour décrire toute caractéristique extraordinaire de l'antenne, particulièrement dans le contexte de l'évaluation de la compatibilité électromagnétique et pour amplifier ou clarifier toute information donnée ci-dessus. Utiliser au besoin des pages supplémentaires. De plus, entrer au besoin l'information suivante :

a. le rapport avant-arrière, en dB, pour les antennes directionnelles utilisées dans les circuits de relais radio;

b. indiquer, dans le cas des antennes à commande de phase :

(1) le mode de fonctionnement, à faisceau simple ou multiple;

(2) les paramètres de faisceau simple; et

(3) les paramètres de faisceau multiple :

a) la polarisation de chaque faisceau;

b) le gain de chaque faisceau;

c) la largeur de faisceau de chaque faisceau; et

d) les caractéristiques de chaque faisceau (partie 4, bloc 7 de la ci-dessus).

A3.8 DID – Operator Manual

DATA ITEM DESCRIPTION	
1. TITLE **Operator Manual**	2. IDENTIFICATION NUMBER **DID MUAS-ILS-202**
3. DESCRIPTION The Operator Manual contains all the essential information required to describe the safe and correct operative procedures and operator maintenance associated with the equipment.	
4. RELATED DOCUMENTS **C-01-100-100/AG-008** *Writer's Guide for Technical Documentation*	5. CONTRACT REFERENCE **SOW**: **Para. 4.4.1.1.1 (pg. 11)** **CDRL: App. A2.2 (pg. 29)**

6 PREPARATION INSTRUCTIONS

6.1 **CONTENT**

6.1.1 The Operator Manual must cover the following topics, and others judged pertinent by the Contractor:

6.1.1.1 General Description/Equipment Overview;

6.1.1.2 Pre-use testing/inspection;

6.1.1.3 Preparation and set up for use;

6.1.1.4 Use and operation, including operation under emergency, adverse, or abnormal conditions, when applicable;

6.1.1.5 Operator Maintenance, IAW the Maintenance Concept para 4.1 (pg. 10);

6.1.1.6 Shut-down and post-shut-down actions and precautions;

6.1.1.7 Preparation for equipment transit by air, land, and sea;

6.1.1.8 Safety/Hazardous material issues;

6.1.2 The Operator Manual material covered in 6.1.1 above, must be amplified by colour illustrations, line drawings, and good quality colour pictures.

6.2 **GENERAL FORMAT**

6.2.1 The Operator Manual must be prepared in the Contractor's format while being in full conformance with the above-stated issue of C-01-100-100/AG-008.

6.2.2 The Operator Manual must include the National Defence Index of Documentation (NDID) number (provided to the Contractor by DND) that must be placed on the top right corner of all the pages of the manual.

6.3 **HARD COPY FORMAT**

6.3.1 The accepted Operator Manual hard copies must be:

6.3.1.1 Printed on paper with these characteristics:

6.3.1.1.1 Standard US Letter Size (270 mm x 216 mm)

6.3.1.1.2 Covers: 280-350 g/m2 polyester film (such as Pico Film), matt surface and white colour

6.3.1.1.3 Pages: 120-170 g/m^2 polyester film (such as Pico Film), matt surface and white colour

6.3.1.2 Bound with white or black spiral coil (PLASTIKOIL® or similar)

6.4 **SOFT COPY FORMAT**

6.4.1 The Operator Manual must be provided as a PDF file with searchable text that matches the printed publication's format and layout. Links, bookmarks and thumbnails are to be included in the PDF file. All references made to a specific paragraph, figure, appendix must be appropriately linked.

6.4.2 Viewing the Operator Manual PDF: pages, regardless of size, containing text and illustrations in landscape, must be rotated for electronic viewing and reading in landscape.

6.4.3 **Soft Copy format submission size below 7MB** – The Operator Manual PDF and its native file may be submitted via email as follows:

6.4.3.1 To Field: As per the related CDRL section 9.A. Addressee, as identified in the contract.

6.4.3.2 Subject Field: MUAS-ILS-202 – Operator Manual – [Rev #] – [Date of Issue]

6.4.4 **Soft Copy format submission size at or above 7MB** - The Operator Manual PDF and its native file must be submitted on CD or DVD media and be labelled as follows:

6.4.4.1 Mini Unmanned Aerial System

6.4.4.2 Operator Manual;

6.4.4.3 MUAS-ILS-202;

6.4.4.4 The Revision number, and

6.4.4.5 The date of issue.

A3.9 DID – Operator Quick Reference Card

DATA ITEM DESCRIPTION	
1. TITLE **Operator Quick Reference Card**	2. IDENTIFICATION NUMBER **DID MUAS-ILS-203**
3. DESCRIPTION Operator Quick Reference Card (OQRC) will allow the trained user to quickly unpack, assemble, and safely use the equipment.	
4. RELATED DOCUMENTS	5. CONTRACT REFERENCE **SOW**: **Para. 4.4.1.2.1 (pg. 11)** **CDRL**: **App. A2.2 (pg. 29)**

6. PREPARATION INSTRUCTIONS

6.1. **CONTENT**

6.1.1. The OQRC must contain the necessary instructions to allow a trained user to quickly, safely and effectively operate the equipment.

6.1.2. The OQRC must assume that the equipment's initial state is packed in its carrying case (see Technical Specifications).

6.1.3. The OQRC instructions must be based on pictograms illustrating the sequence of steps required while using only minimal text to assist in the understanding of the document. Desired look and feel is similar to commercial airline safety pamphlets describing the use of oxygen masks, and emergency exits.

6.1.4. The OQRC must not introduce new information and procedures not also described in the Operator Manual, as the Operator Manual is the master document on how to use the equipment.

6.1.5. The OQRC cautionary advisory's heading must be determined based on the criteria set out in ANNEX A SOW para. 4.4.5.1.

6.1.6. The OQRC cautionary advisory must read as follows: "**This Operator Quick Reference Card is intended solely for experienced users who have been trained on this equipment, and have read and understood its Operator Manual** (CFTO# to be supplied by DND). **When in doubt, read the Operator Manual before operating this equipment.**"

6.1.7. The OQRC cautionary advisory must also have, immediately following this text, a brief description of the consequences of misuse of the equipment, linked to the same criteria listed in 6.1.5 above.

6.2. **HARD COPY FORMAT**

6.2.1. The accepted OQRC hard copies must:

6.2.1.1. Be printed on paper with pages of 290-370 g/m^2 polyester film (such as Pico Film), matt surface and white colour, and bound with white or black spiral coil (PLASTIKOIL®);

6.2.1.2. Contain no more than four (4) sheets;

6.2.1.3. Be produced and printed exclusively in black and white. Colours must be described by text in small caps.

6.3. **SOFT COPY FORMAT**

6.3.1. The OQRC must be provided as a PDF file with searchable text that matches the printed publication's format and layout. Links, bookmarks and thumbnails are to be included in the PDF file. All references made to a specific paragraph, figure, appendix must be appropriately linked.

6.3.2. Viewing the OQRC PDF: pages, regardless of size, containing text and illustrations in landscape, must be rotated for electronic viewing and reading in landscape.

6.3.3. **Soft Copy format submission size below 7MB** – The OQRC PDF and its native file may be submitted via email as follows:

6.3.3.1. To Field: As per the related CDRL section 9.A. Addressee, as identified in the contract.

6.3.3.2. Subject Field: MUAS-ILS-203 – OQRC – [Rev #] – [Date of Issue]

6.3.4. **Soft Copy format submission size at or above 7MB** - The OQRC PDF and its native file must be submitted on CD or DVD media and be labelled as follows:

6.3.4.1. Mini Unmanned Aerial System

6.3.4.2. OQRC;

6.3.4.3. MUAS-ILS-203;

6.3.4.4. The Revision number, and

6.3.4.5. The date of issue.

A3.10 **DID – Maintenance and Parts Handbook**

DATA ITEM DESCRIPTION	
1. TITLE **Maintenance and Parts Handbook**	2. IDENTIFICATION NUMBER **DID MUAS-ILS-204**
3. DESCRIPTION The Maintenance and Parts Handbook will allow a trained technician to effectively maintain and identify parts of the system.	
4. RELATED DOCUMENTS **D-01-100-205/SF-000** *Preparation of Corrective Maintenance Instruction;* **D-01-100-204/SF-000** *Preparation of Preventive Maintenance Instructions;* **C-01-100-100/AG-008** *Writer's Guide for Technical Documentation*	5. CONTRACT REFERENCE **SOW**: **Para. 4.4.1.3.1 (pg. 11)** **CDRL**: **App. A2.2 (pg. 29)**

6 PREPARATION INSTRUCTIONS

6.1 **CONTENT**

6.1.1 **Maintenance**

6.1.1.1 The scope of the Maintenance portion of the Maintenance and Parts Handbook must cover the Operator Maintenance and Technician Maintenance and repair tasks.

6.1.1.2 The maintenance topics must consist of:

6.1.1.2.1 General Description/Equipment Overview;

6.1.1.2.2 Pre-maintenance procedures to make the equipment safe;

6.1.1.2.3 Troubleshooting and testing;

6.1.1.2.4 Basic diagnosis and fault finding;

6.1.1.2.5 Adjustments, maintenance and repairs grouped IAW the Maintenance Concept para 4.1 (pg. 10), and presented IAW D-01-100-205/SF-000 and D-01-100-204/SF-000;

6.1.1.2.6 Safety/Hazardous material issues;

6.1.1.3 The maintenance material must be amplified by colour illustrations, line drawings, and good quality colour pictures.

6.1.2 **Parts Handbook**

6.1.2.1 The Maintenance and Parts Handbook must have an Illustrated Parts List section that must contain all the necessary information to positively identify and relate, to each other, all the parts of the equipment that are procurable and those involved in all maintenance tasks outlined in 6.1.1.2 above.

6.1.2.2 The Illustrated parts List must have drawings of the parts and assemblies: line drawings and exploded views in black and white only; and,

6.1.2.3 The Illustrated parts List must have corresponding table(s) containing, in the listed order:

6.1.2.3.1 Item Number (callout in the drawing(s));

6.1.2.3.2 Item Name;

6.1.2.3.3 Manufacturer's Reference Part Number;

6.1.2.3.4 Manufacturer's NCAGE code;

6.1.2.3.5 Contractor's Part Number (CPN), if the Contractor is not the original Manufacturer;

6.1.2.3.6 NATO Stock Number (NSN), as applicable; and,

6.1.2.3.7 Quantity per Assembly (QPA).

6.2 **GENERAL FORMAT**

6.2.1 The Maintenance and Parts Handbook must be prepared in the Contractor's format and must be in full conformance with the above-stated issue of C-01-100-100/AG-008.

6.3 **HARD COPY FORMAT**

6.3.1 The accepted Maintenance and Parts Handbook hard copies must be:

6.3.1.1 Printed on paper with these characteristics:

6.3.1.1.1 Standard US Letter Size (216 mm x 270 mm)

6.3.1.1.2 Covers: 290-370 g/m2 polyester film (such as Pico Film), matt surface and white colour

6.3.1.1.3 Pages: 120-170 g/m^2 polyester film (such as Pico Film), matt surface and white colour

6.3.1.2 Bound with white or black spiral PVC coil (such as PLASTIKOIL®)

6.4 **SOFT COPY FORMAT**

6.4.1 The Maintenance and Parts Handbook must be provided as a PDF file with searchable text that matches the printed publication's format and layout.

6.4.1.1 Links, bookmarks and thumbnails are to be included in the PDF file.

6.4.1.2 All references made to a specific paragraph, figure, appendix must be appropriately linked.

6.4.1.3 Viewing the PDF version: pages, regardless of size, containing text and illustrations in landscape, must be rotated for electronic viewing and reading in landscape.

6.4.2 **Soft Copy format submission size below 7MB** – The Maintenance and Parts Handbook PDF and its native file may be submitted via email as follows:

6.4.2.1 To Field: As per the related CDRL section 9.A. Addressee, as identified in the contract.

6.4.2.2 Subject Field: MUAS-ILS-204 – Maintenance and Parts Handbook – [Rev #] – [Date of Issue]

6.4.3 **Copy format submission size at or above 7MB** - The Maintenance and Parts Handbook PDF and its native file must be submitted on CD or DVD media and be labelled as follows:

6.4.3.1 Mini Unmanned Aerial System

6.4.3.2 Maintenance and Parts Handbook;

6.4.3.3 MUAS-ILS-204;

6.4.3.4 The Revision number, and

6.4.3.5 The date of issue.

A3.11 **DID – Operator Training Package**

DATA ITEM DESCRIPTION	
1. TITLE **Operator Training Package**	2. IDENTIFICATION NUMBER **DID MUAS-ILS-205**
3. DESCRIPTION The Operator Training Package will be used as the reference material during the Training Sessions, and to facilitate future lesson plan preparation on the operation, Operator maintenance and storage of the equipment.	
4. RELATED DOCUMENTS **C-01-100-100/AG-008** *Writer's Guide for Technical Documentation*	5. CONTRACT REFERENCE **SOW**: **Para. 4.4.1.4.1 (pg. 11)** **CDRL**: **App. A2.2 (pg. 29)**

6. PREPARATION INSTRUCTIONS

6.1. **CONTENT**

6.1.1. The Operator Training Package course material must include, in the order judged most appropriate by the Contractor, the following subjects:

6.1.1.1. General Description/Equipment Overview;

6.1.1.2. Pre-use testing/inspection;

6.1.1.3. Preparation and set up for use;

6.1.1.4. Use and operation, including operation under emergency, adverse, or abnormal conditions, when applicable;

6.1.1.5. Preparation for travel and handling;

6.1.1.6. Storage, preservation, exercising, and reactivation procedures;

6.1.1.7. Safety and Hazardous material issues;

6.1.1.8. Operator Troubleshooting and testing;

6.1.1.9. Basic diagnosis and fault finding; and,

6.1.1.10. Operator Maintenance IAW the Maintenance Concept para. 4.1 (pg. 10).

6.1.2. The Operator Training Package course material must be amplified by colour illustrations, line drawings, and good quality colour pictures.

6.1.3. The Operator Training Package course material subjects must be approached from the perspective of an inexperienced user for which the equipment is new and unknown.

6.1.4. The Operator Training Package course material must not present any information that cannot also be found in the Technical Publication Package documents; those documents remain the primary reference for the equipment.

6.1.5. The Operator Training Package must include a **Student Handout** that includes the course material described above.

6.1.6. The Operator Training Package must include an **Instructor Lesson Plan** that includes the course material described above, speaker's notes, and that outlines the following:

6.1.6.1. Classroom's physical and functional requirements;

6.1.6.2. Field area's physical and functional requirements;

6.1.6.3. Training Session schedule, divided by course material subjects;

6.1.6.4. Instructor/Student ratio for the course material subjects;

6.1.6.5. Training materiel to be supplied by the Contractor;

6.1.6.6. Training material to be supplied by Canada.

6.2. **GENERAL FORMAT**

6.2.1. The Operator Training Package can be prepared in the Contractor's format while using C-01-100-100/AG-008 as guidance.

6.2.2. No Contractor or sub-contractor logo, name, trademark, or other wording or device that may be interpreted as advertising must appear in the publication.

6.2.3. The Operator Training Package **Student Handout** must have no more than three (3) slides per page of the course material, and have additional space and lines for note taking.

6.2.4. The Operator Training Package **Instructor Lesson Plan** must have one (1) slide per page of the course material, with the speaker's notes below it.

6.3. **HARD COPY FORMAT**

6.3.1. The Operator Training Package must be furnished in a three (3) ring binder(s) and printed on paper with these characteristics:

6.3.1.1. Weight of no less than 92 g/m^2;

6.3.1.2. Brightness of no less than 96 ISO brightness;

6.4. **SOFT COPY FORMAT**

6.4.1. The Operator Training Package soft copy format must be MS PowerPoint.

6.4.2. **Soft Copy format submission size below 7MB** – The Operator Training Package may be submitted via email as follows:

6.4.2.1. To Field: As per the related CDRL section 9.A. Addressee, as identified in the contract.

6.4.2.2. Subject Field: MUAS-ILS-205 – Operator Training Package – [Rev #] – [Date of Issue]

6.4.3. **Soft Copy format submission size at or above 7MB** - The Operator Training Package file must be submitted on CD or DVD media and be labelled as follows:

6.4.3.1. Mini Unmanned Aerial System

6.4.3.2. Operator Training Package;

6.4.3.3. MUAS-ILS-205;

6.4.3.4. The Revision number, and

6.4.3.5. The date of issue.

A3.12 **DID – Preservation, Storage and Reactivation Instructions**

DATA ITEM DESCRIPTION	
1. TITLE **Preservation, Storage and Reactivation Instructions**	2. IDENTIFICATION NUMBER **DID MUAS-ILS-206**
3. DESCRIPTION The Preservation, Storage and Reactivation Instructions (PSRI) provides guidance for the storage and preservation, in-storage inspections, exercising, and reactivation of equipment.	
4. RELATED DOCUMENTS **D-01-100-211/SF-000** *Preservation, Storage and Handling Instructions* **C-01-100-100/AG-008** *Writer's Guide for Technical Documentation*	5. CONTRACT REFERENCE **SOW**: **Para. 4.4.1.5.1 (pg. 11)** **CDRL**: **App. A2.2 (pg. 29)**

6. PREPARATION INSTRUCTIONS

6.1. **CONTENT**

6.1.1. The PSRI must contain the necessary data as outlined in D-01-100-211/SF-000, *Preservation, Storage and Handling Instructions,* **omitting** Annex A Part 4 – Handling and Shipping.

6.2. **GENERAL FORMAT**

6.2.1. The PSRI must be prepared in the Contractor's format while being in full conformance with the above-stated issue of C-01-100-100/AG-008.

6.2.2. The PSRI must have the National Defence Index of Documentation (NDID) number, provided to the Contractor by DND, on the top right corner of all the pages.

6.3. **HARD COPY FORMAT**

6.3.1. The accepted PSRI hard copies must be:

6.3.1.1. Printed on paper with these characteristics:

6.3.1.1.1. Standard US Letter Size (216 mm x 270 mm)

6.3.1.1.2. Covers: 280-350 g/m^2 polyester film (such as Pico Film), matt surface and white colour

6.3.1.1.3. Pages: 120-170 g/m^2 polyester film (such as Pico Film), matt surface and white colour

6.3.1.2. Bound with white or black spiral PVC coil (such as PLASTIKOIL®)

6.4. **SOFT COPY FORMAT**

6.4.1. The PSRI must be provided as a PDF file with searchable text that matches the printed publication's format and layout. Links, bookmarks and thumbnails are to be included in the PDF file. All references made to a specific paragraph, figure, appendix must be appropriately linked.

6.4.2. Viewing the PDF version: pages, regardless of size, containing text and illustrations in landscape, must be rotated for electronic viewing and reading in landscape.

6.4.3. **Soft Copy format submission size below 7MB** – The PRSI PDF and its native file may be submitted via email as follows:

6.4.3.1. To Field: As per the related CDRL section 9.A. Addressee, as identified in the contract.

6.4.3.2. Subject Field: MUAS-ILS-206 – PRSI – [Rev #] – [Date of Issue]

6.4.4. **Soft Copy format submission size at or above 7MB** - The PRSI PDF and its native file must be submitted on CD or DVD media and be labelled as follows:

6.4.4.1. Mini Unmanned Aerial System

6.4.4.2. PRSI;

6.4.4.3. MUAS-ILS-206;

6.4.4.4. The Revision number, and

6.4.4.5. The date of issue.

A3.13 DID – Provisioning Parts Breakdown

DATA ITEM DESCRIPTION	
1. TITLE **Provisioning Parts Breakdown**	2. IDENTIFICATION NUMBER **DID MUAS-ILS-207**
3. DESCRIPTION The Provisioning Parts Breakdown (PPB) is a top-down breakdown of the equipment in the configuration in which it is being procured.	
4. RELATED DOCUMENTS **D-01-100-214/SF-000** *Specification for Preparation of Provisioning Documentation for Canadian Forces Equipment*	5. CONTRACT REFERENCE **SOW**: **Para. 4.5.3.1.1 (pg. 14)** **CDRL**: **App. A2.2 (pg. 29)**

6 PREPARATION INSTRUCTIONS

6.1 **CONTENT**

6.1.1 The PPB must be prepared IAW in D-01-100-214/SF-000, with modifications listed below.

6.1.2 The following data fields must be added to the PPB:

6.1.2.1 *Quantity per End Item (QPEI):* Between Fields number 9 and 10, refers to the total number of times the item is used in the whole prime equipment (A-level). This field may contain whatever number of numeric characters needed to show the quantities.

6.1.2.2 *SPTD filename:* As the last Field, must contain the line item's applicable SPTD filename. This field may be whatever size adequate to fully show the data therein.

6.1.3 Common fasteners and hardware (items with "Y" indention code) must have an Item Name that describes their key characteristics so that equivalents can be identified from alternate sources, as possible within the mandated field size. Example: "Hex Head Screw M8 x 1.25mm, 30mm Lg, 18-8 SS, Gr. 8.8".

6.1.4 For clarity:

6.1.4.1 *Original Equipment Manufacturer's Part Number* refers only to the Contractor which DND has contracted to supply the equipment; data from sub-contractors for items that they did not manufacture or do not control are not permitted. This field may be left blank if no data is available, or if it is the same as the Manufacturer's Reference Number (MRN).

6.1.4.2 *Quantity per Assembly* (QPA) refers to the number of times the item is used in the next higher assembly. For example, a C-level item's QPA will show the number of times it is used in its related B-level assembly, without being multiplied by the number of B-level assemblies.

6.1.4.3 *NATO Commercial and Government Entity* (NCAGE) Codes can be searched and requested through the NATO portal: https://eportal.nspa.nato.int/AC135Public/scage/CageList.aspx.

6.1.5 The Source Maintenance and Recoverability (SMR) Codes are used to communicate maintenance and supply instructions to the various logistic support levels and user organizations for the logistic support of systems, equipment, and end items. The PPB SMR Codes must be chosen from the following list:

SMR Field Position	Code	Application/Explanation
First and Second Position Source Codes	PA	Item procured and stocked for anticipated or known usage. Items are normally considered for replenishment
	PC	Item procured and stocked, but is deteriorative in nature.
	PF	Support equipment which will not be stocked, but which will be centrally procured on demand.
	XA	Item is not procured or stocked because the requirements for the item will result in the replacement of the next higher assembly

	XC	Installation drawing, diagram, instruction sheet, or field Service drawing, that is identified by the manufacturers' part number.
Third Position Maintenance Codes	C	Support item is removed, replaced, used by the operator/crew.
	O	Support item is removed, replaced, or used at the Technician Maintenance level.
	K	Repairable item. Item is removed, replaced, or used at contractor facility.
Fourth Position Repair Codes	C	The lowest maintenance activity capable of complete repair of the support item is the operator/crew.
	O	The lowest maintenance activity capable of complete repair of the support item is the Technician Maintenance level.
	K	Repairable support item. Complete repair capability exists at a designated contractor facility.
	Z	Non-repairable.
Fifth Position Recoverability Codes	C	Repairable item. When uneconomically repairable, condemn and disposed by the operator/crew.
	Z	Non-repairable item. When item becomes unserviceable, condemn and disposed of by authorized activity.
	O	Repairable item. When uneconomically repairable, condemn and dispose at organizational activity.
	K	Repairable item. Condemnation and disposal to be performed at contractor facility.

6.2 **GENERAL FORMAT**

6.2.1 The PPB must be prepared as an MS Excel spreadsheet, formatted IAW D-01-100-214/SF-000, taking into account the modifications listed in para 6.1.2 above.

6.3 **SOFT COPY FORMAT**

6.3.1 **Soft Copy format submission size below 7MB** – The PPB may be submitted via email as follows:

6.3.1.1 To Field: As per the related CDRL section 9.A. Addressee, as identified in the contract.

6.3.1.2 Subject Field: MUAS-ILS-207 – PPB – [Rev #] – [Date of Issue]

6.3.2 **Soft Copy format submission size at or above 7MB** - The PPB file must be submitted on CD or DVD media and be labelled as follows:

6.3.2.1 Mini Unmanned Aerial System

6.3.2.2 Provisioning Parts Breakdown;

6.3.2.3 MUAS-ILS-207;

6.3.2.4 The Revision number, and

6.3.2.5 The date of issue.

A3.14 DID – Supplementary Provisioning Technical Documentation

DATA ITEM DESCRIPTION	
1. TITLE **Supplementary Provisioning Technical Documentation**	2. IDENTIFICATION NUMBER **DID MUAS-ILS-208**
3. DESCRIPTION The Supplementary Provisioning Technical Documentation (SPTD) fully identifies and describes part(s) that may be catalogued.	
4. RELATED DOCUMENTS **D-01-100-214/SF-000** *Specification for Preparation of Provisioning Documentation for Canadian Forces Equipment*	5. CONTRACT REFERENCE **SOW**: **Para. 4.5.3.2.1 (pg. 14)** **CDRL**: **App. A2.2 (pg. 29)**

6. **PREPARATION INSTRUCTIONS**

6.1. **CONTENT**

6.1.1. The Supplementary Provisioning Technical Documentation (SPTD) must be provided for each item appearing on the Provisioning Documentation, IAW D-01-100-214/SF-000.

6.1.2. The SPTD must include the technical data required for DND to classify and fully describe the item within the NATO codification system, allowing for item identification and cataloguing purposes.

6.2. **SOFT COPY FORMAT**

6.2.1. The SPTD must be submitted with filenames in the following format: (MRN)_(NCAGE)_(item name).(software extension).

6.2.2. **Soft Copy format submission size below 7MB** – The SPTD may be submitted via email as follows:

6.2.2.1. To Field: As per the related CDRL section 9.A. Addressee, as identified in the contract.

6.2.2.2. Subject Field: MUAS-ILS-208 – SPTD – [Rev #] – [Date of Issue]

6.2.3. **Soft Copy format submission size at or above 7MB** – The SPTD must be submitted on CD or DVD media and be labelled as follows:

6.2.3.1. Mini Unmanned Aerial System

6.2.3.2. SPTD;

6.2.3.3. MUAS-ILS-208;

6.2.3.4. The Revision number, and

6.2.3.5. The date of issue.

A3.15 **DID – Material Identification Data Set**

DATA ITEM DESCRIPTION	
1. TITLE **Material Identification Data Set**	2. IDENTIFICATION NUMBER **DID MUAS-ILS-209**
3. DESCRIPTION To identify the data elements and format required to complete the Materiel Identification Data Set (MIDS) for each serialized item being procured. This data will be used to create the MUAS Equipment Master Record.	
4. RELATED DOCUMENTS	5. CONTRACT REFERENCE **SOW**: **Para. 4.5.3.3 (pg. 14)** **CDRL**: **App. A2.2 (pg. 29)**

6. PREPARATION INSTRUCTIONS

6.1. **CONTENT**

6.1.1. The MIDS must contain the following data:

6.1.1.1. Unique Item Identification

6.1.1.1.1. Item Description (English)

6.1.1.1.2. Item Description (French)

6.1.1.1.3. Manufacturer's NCAGE

6.1.1.1.4. Manufacturer's Part Number (MPN)

6.1.1.1.5. Manufacturer's Serial Number

6.1.1.2. Parent Identification (where installed in higher level assembly):

6.1.1.2.1. Parent Manufacturer's NCAGE

6.1.1.2.2. Parent Manufacturer's Part Number (MPN)

6.1.1.2.3. Parent Manufacturer's Serial Number (if known)

6.2. **GENERAL FORMAT**

6.2.1. The MIDS must be presented in accordance with the MIDS Excel Sheet template referenced.

6.3. **SOFT COPY FORMAT**

6.3.1. 6.3.1. The MIDS must be delivered as an Excel spreadsheet.

6.3.2. **Soft Copy format submission size below 7MB** – The MIDS may be submitted via email as follows:

6.3.2.1. To Field: As per the related CDRL section 9.A. Addressee, as identified in the contract.

6.3.2.2. Subject Field: MUAS-ILS-209 – MIDS – [Rev #] – [Date of Issue]

6.3.3. **Soft Copy format submission size at or above 7MB** – The MIDS file must be submitted on CD or DVD media and be labelled as follows:

6.3.3.1. Mini Unmanned Aerial System

6.3.3.2. MIDS

6.3.3.3. MUAS-ILS-209;

6.3.3.4. The Revision number, and

6.3.3.5. The date of issue.

A3.16 DID – Identification Plates – Design Template & Populated Designs

DATA ITEM DESCRIPTION	
1. TITLE **Identification Plates – Design Template & Populated Designs**	2. IDENTIFICATION NUMBER **DID MUAS-ILS-210**
3. DESCRIPTION The Identification Plates uniquely identify equipment and components and spares based on the procedures governing the identification marking of Canadian military property.	
4. RELATED DOCUMENTS **D-02-002-001/SG-001** *Canadian Forces Standard Identification Marking of Canadian Military Property* **D-01-400-002/SF-000** *Specification - Levels of Engineering Drawings* **STANAG 2290 Ed. 2** *NATO Unique Identification of Items*	5. CONTRACT REFERENCE **SOW**: **Para. 4.6.1 (pg. 14)** **CDRL**: **App. A2.2 (pg. 29)**

6. PREPARATION INSTRUCTIONS

6.1. **CONTENT AND GENERAL FORMAT**

6.1.1. In accordance with D-02-002-001/SG-001, the Identification Plates affixed to each item included in Annex A SOW para 4.6.2 must be of size, format, and construction appropriate for the item being identified, and contain the data required for those Identification Plate formats in both official languages.

6.1.2. The Identification Plates Design Template & Populated Designs must be prepared as representative Level 2 drawings (see D-01-400-002/SF-000).

6.1.2.1. The Level 2 drawings must include the mounting or installation method for each Identification Plate, with any fasteners described by size, and/or technical standard, and/or NSN, and quantity.

6.1.3. Identification Plates for serially managed items must include a Unique Item Identifier in accordance with STANAG 2290 Ed. 2.

6.1.3.1. Identification Plates Design Template & Populated Designs must include Unique Item Identifier mark data qualifier and data elements.

6.2. **HARD COPY FORMAT**

6.2.1. The Identification Plates Design Template & Populated Designs must be:

6.2.1.1. Printed in 1:1 scale;

6.2.1.2. Printed on Standard US Ledger size paper (432 mm x 279 mm), with a:

6.2.1.2.1. Weight of no less than 90 g/m^2;

6.2.1.2.2. Brightness of no less than 96 ISO brightness;

6.3. **SOFT COPY FORMAT**

6.3.1. The Identification Plates Design Template & Populated Designs must be provided as PDF files, filename labelled in the following way: [Item Name]_[MRN].pdf.

6.3.2. The Identification Plates Design Template and Populated Designs PDFs containing text and illustrations in landscape, must be rotated for electronic viewing and reading in landscape.

6.3.3. **Soft Copy format submission size below 7MB** – The Identification Plates Design Template & Populated Designs may be submitted via email as follows:

6.3.3.1. To Field: As per the related CDRL section 9.A. Addressee, as identified in the contract.

6.3.3.2. Subject Field: MUAS-ILS-210 – Identification Plates – [Rev #] – [Date of Issue]

6.3.4. **Soft Copy format submission size at or above 7MB** – The Identification Plates Design Template & Populated Designs file must be submitted on CD or DVD media and be labelled as follows:

6.3.4.1. Mini Unmanned Aerial System

6.3.4.2. Identification Plates

6.3.4.3. MUAS-ILS-210;

6.3.4.4. The Revision number, and

6.3.4.5. The date of issue.

A3.17 DID – Controlled & Non-Controlled Goods List

DATA ITEM DESCRIPTION	
1. TITLE **Controlled & Non-Controlled Goods List (CNCGL)**	2. IDENTIFICATION NUMBER **DID MUAS-ILS-211**
3. DESCRIPTION Controlled Goods Items – The CNCGL identifies if the controlled goods end items, components and sub-components of the equipment are specifically designed and modified for military purpose, and provides the Demilitarization Instructions if required. Non-Controlled Goods Items – The CNCGL still includes non-controlled goods end items, components and sub-components of the equipment, as they will still require a DMC assignment.	
4. RELATED DOCUMENTS **C-02-007-000/AG-001** *Controlled Technology Access and Transfer (CTAT) Manual*	5. CONTRACT REFERENCE **SOW**: **Para. 4.7.1 (pg. 15)** **CDRL**: **App. A2.2 (pg. 29)**

6. PREPARATION INSTRUCTIONS

6.1. **CONTENT**

6.1.1. The CNCGL must identify end items accordingly, IAW C-02-007-000/AG-001:

6.1.1.1. For Canadian origin items, Canada's Export Control List (ECL) articles that apply in accordance with the Defence Product Act (DPA);

6.1.1.2. For US origin dual use, the Export Control Classification Number (ECCN) of the Commerce Control List that applies;

6.1.1.3. For US origin controlled goods also known as defence articles, the United States Munitions List (USML) Category and paragraph that apply in accordance with the International Traffic in Arms Regulations (ITAR);

6.1.1.4. For all other countries other than Canada and the USA, the category and article of the Wassenaar Control List that applies, and

6.1.1.5. All items require a Demilitarization Code (DMC).

6.2. **GENERAL FORMAT**

6.2.1. The CNCGL must be in spreadsheet format with 6 columns:

6.2.1.1. Item name;

6.2.1.2. Manufacturer's Reference Part Number;

6.2.1.3. Ref para for Canadian origin items (ECL);

6.2.1.4. Ref para for US origin controlled goods (USML);

6.2.1.5. Demilitarization Code (DMC);

6.2.1.6. Formal Demilitarisation Instructions, if DMC is F;

6.2.1.7. Remarks.

6.3. **HARD COPY FORMAT**

6.3.1. The CNCGL must be printed on paper with these characteristics:

6.3.1.1. Weight of no less than 90 g/m2;

6.3.1.2. Brightness of no less than 96 ISO brightness;

6.4. **SOFT COPY FORMAT**

6.4.1. The CNCGL must be provided as an MS Excel Spreadsheet file.

6.4.2. **Soft Copy format submission size below 7MB** – The CNCGL may be submitted via email as follows:

6.4.2.1. To Field: As per the related CDRL section 9.A. Addressee, as identified in the contract.

6.4.2.2. Subject Field: MUAS-ILS-211 – CNCGL – [Rev #] – [Date of Issue]

6.4.3. **Soft Copy format submission size at or above 7MB** – The CNCGL file must be submitted on CD or DVD media and be labelled as follows:

6.4.3.1. Mini Unmanned Aerial System

6.4.3.2. CNCGL

6.4.3.3. MUAS-ILS-211;

6.4.3.4. The Revision number, and

6.4.3.5. The date of issue.

A3.18 DID – Identification Labels for Storage & Shipment and Packaging Codes

DATA ITEM DESCRIPTION	
1. TITLE **Identification Labels for Storage & Shipment and Packaging Codes**	2. IDENTIFICATION NUMBER **DID MUAS-ILS-212**
3. DESCRIPTION The Identification Labels for Storage & Shipment and Packaging Codes (CF271 forms) ensures that the labelling used to identify packages for items procured by DND and shipped to and stored at a Canadian facility comply with CAF specifications. As well, this will allow DND to obtain a complete record of packaging codes for catalogued items of the equipment.	
4. RELATED DOCUMENTS **D-LM-008-011/SF-001** *Preparation and Use of Packaging Requirements Codes* **D-LM-008-002/SF-001** *Specification for Marking for Storage and Shipment* **D-01-400-002/SF-000** Specification - *Levels of Engineering Drawings* **CF271** *Form (MS Excel version provided by DND after contract award)*	5. CONTRACT REFERENCE **SOW**: **Para. 4.8.3 (pg. 15)** **CDRL**: **App. A2.2 (pg. 29)**

6. PREPARATION INSTRUCTIONS

6.1. **CONTENT AND GENERAL FORMAT**

6.1.1. The Identification Labels for Storage & Shipment design, populated with the appropriate data, must be provided as Level 1 drawings (see D-01-400-002/SF-000) and include dimensions to show the measurements as defined by D-LM-008-002/SF-001 (example: text size, bar code dimensions).

6.1.2. A separate Packaging Code (CF271 Form) must be provided electronically for each item that:

6.1.2.1. Requires special packaging, packing, or preservation considerations to meet the required protection level (see 4.8.1 of the SOW), as per D-LM-008-011/SF-001 (see Table 1 below); and,

6.1.2.2. Has a NATO Stock Number (NSN).

6.1.3. The CF271 forms' file name must correspond to the item listed within, either by its part number or NSN (example: CF271 9422-01-552-8836.xls).

6.2. **HARD COPY FORMAT**

6.2.1. The Identification Labels for Storage & Shipment designs must be printed on paper with these characteristics:

6.2.1.1. Standard US Ledger size (432 mm x 279 mm)

6.2.1.2. Weight of no less than 90 g/m2;

6.2.1.3. Brightness of no less than 96 ISO brightness;

6.3. **SOFT COPY FORMAT**

6.3.1. The Identification Labels for Storage & Shipment designs must be provided as PDF files.

6.3.2. The Identification Labels for Storage & Shipment designs PDFs containing text and illustrations in landscape, must be rotated for electronic viewing and reading in landscape.

6.3.3. The Packaging Codes (CF271 forms) must be provided as MS Excel Spreadsheet files.

6.3.4. **Soft Copy format submission size below 7MB** – The Identification Labels for Storage & Shipment and Packaging Codes may be submitted via email as follows:

6.3.4.1. To Field: As per the related CDRL section 9.A. Addressee, as identified in the contract.

6.3.4.2. Subject Field: MUAS-ILS-212 – Identification Labels for Storage & Shipment and Packaging Codes – [Rev #] – [Date of Issue]

6.3.5. **Soft Copy format submission size at or above 7MB** – The Identification Labels for Storage & Shipment and Packaging Codes files must be submitted on CD or DVD media and be labelled as follows:

6.3.5.1. Mini Unmanned Aerial System

6.3.5.2. Identification Labels for Storage & Shipment and Packaging Codes

6.3.5.3. MUAS-ILS-212;

6.3.5.4. The Revision number, and

6.3.5.5. The date of issue.

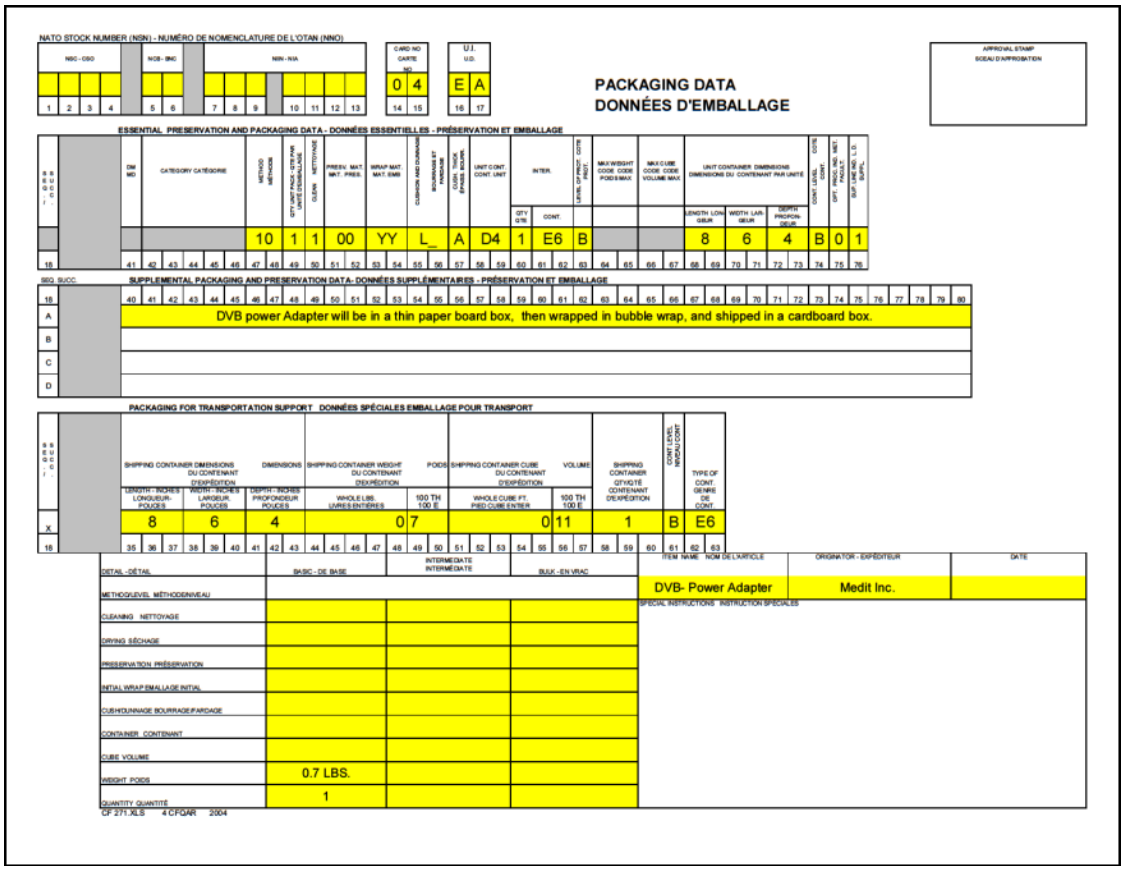

NATO STOCK NUMBER (NSN) - NUMÉRO DE NOMENCLATURE DE L'OTAN (NNO)

NSC - CSO	NCB - SNC	NIN - NIA	CARD NO CARTE NO	U.I. U.D.
			0 4	E A

PACKAGING DATA
DONNÉES D'EMBALLAGE

APPROVAL STAMP
SCEAU D'APPROBATION

ESSENTIAL PRESERVATION AND PACKAGING DATA - DONNÉES ESSENTIELLES - PRÉSERVATION ET EMBALLAGE

SEQ SUCC	DM MD	CATEGORY CATÉGORIE	METHOD MÉTHODE	QTY UNIT PACK - QTÉ PAR UNITÉ D'EMBALLAGE	CLEAN NETTOYAGE	PRESV. MAT. MAT. PRÉS.	WRAP MAT. MAT. EMB	CUSHION AND DUNNAGE BOURRAGE ET FRÉDAGE	CUSH. THICK. EPAISSEUR	UNIT CONT. CONT. UNIT	INTER. QTY QTÉ	INTER. CONT.	LEVEL OF PROT. NIVEAU DE PROT.	MAX WEIGHT CODE CODE POIDS MAX	MAX CUBE CODE CODE VOLUME MAX	UNIT CONTAINER DIMENSIONS DIMENSIONS DU CONTENANT PAR UNITÉ LENGTH LONGUEUR	WIDTH LARGEUR	DEPTH PROFONDEUR	CONT. LEVEL CONT.	QTY PACK. PAR. PAQUET	SUP. LEVEL S.D. SUPPL.
			10	1	1	00	YY	L_	A	D4	1	E6	B			8	6	4	B	0	1
18			41 42 43 44 45 46	47 48	49 50	51 52	53 54	55 56	57	58 59	60	61 62	63	64 65	66 67	68 69	70 71	72 73	74	75	76

SEQ SUCC SUPPLEMENTAL PACKAGING AND PRESERVATION DATA- DONNÉES SUPPLÉMENTAIRES - PRÉSERVATION ET EMBALLAGE

18	40 41 42 43 44 45 46 47 48 49 50 51 52 53 54 55 56 57 58 59 60 61 62 63 64 65 66 67 68 69 70 71 72 73 74 75 76 77 78 79 80
A	DVB power Adapter will be in a thin paper board box, then wrapped in bubble wrap, and shipped in a cardboard box.
B	
C	
D	

PACKAGING FOR TRANSPORTATION SUPPORT DONNÉES SPÉCIALES EMBALLAGE POUR TRANSPORT

SEQ SUCC	SHIPPING CONTAINER DIMENSIONS DU CONTENANT D'EXPÉDITION LENGTH - INCHES LONGUEUR - POUCES	WIDTH - INCHES LARGEUR - POUCES	DEPTH - INCHES PROFONDEUR - POUCES	DIMENSIONS	SHIPPING CONTAINER WEIGHT DU CONTENANT D'EXPÉDITION WHOLE LBS LIVRES ENTIÈRES	100 TH 100 E	PODS	SHIPPING CONTAINER CUBE DU CONTENANT D'EXPÉDITION WHOLE CUBE FT PIED CUBE ENTIER	100 TH 100 E	VOLUME	SHIPPING CONTAINER QTY/QTÉ CONTENANT D'EXPÉDITION	CONT LEVEL NIVEAU CONT	TYPE OF CONT GENRE DE CONT
X	8	6	4		0	7		0	11		1	B	E6
18	35 36 37 38 39 40 41	42 43	44 45 46 47		48 49 50	51 52 53		54 55 56 57			58 59	60 61	62 63

DETAIL - DÉTAIL	BASIC - DE BASE	INTERMEDIATE INTERMÉDIATE	BULK - EN VRAC
METHOD/LEVEL MÉTHODE/NIVEAU			
CLEANING NETTOYAGE			
DRYING SÉCHAGE			
PRESERVATION PRÉSERVATION			
INITIAL WRAP EMBALLAGE INITIAL			
CUSH/DUNNAGE BOURRAGE/FARDAGE			
CONTAINER CONTENANT			
CUBE VOLUME			
WEIGHT POIDS	0.7 LBS.		
QUANTITY QUANTITÉ	1		

ITEM NAME NOM DE L'ARTICLE	ORIGINATOR - EXPÉDITEUR	DATE
DVB- Power Adapter	Medit Inc.	

SPECIAL INSTRUCTIONS INSTRUCTION SPECIALES

CF 271.XLS 4 CFQAR 2004

Table 1: Sample CF271 form

A3.19 **DID – List of Items to be Supported**

DATA ITEM DESCRIPTION	
1. TITLE **List of Items to be Supported**	2. IDENTIFICATION NUMBER **DID MUAS-ILS-213**
3. DESCRIPTION The List of Items to be Supported (LIS) will provide the repairable/consumable item data and technical data, which will be supported once the system is delivered. DND will use this information, along with the provisioning data, to populate the Support SOW Appendix A1.0 tables.	
4. RELATED DOCUMENTS	5. CONTRACT REFERENCE **SOW**: **Para. 4.9.1 (pg. 15)** **CDRL**: **App. A2.2 (pg. 29)**

6. PREPARATION INSTRUCTIONS

6.1. **CONTENT**

6.1.1. The LIS must provide an overview and understanding to DND on how the MUAS and its associated equipment will be supported once the MUAS is delivered. Refer to the Support SOW for further information.

6.1.2. The LIS must provide the following completed tables, stemming from the Concept of Operation & Support (in accordance with the Support SOW), and in accordance with the Maintenance Concept ANNEX A paragraph 4.1.1.1 (page 10):

6.1.2.1. Supported Equipment and Spares Table – This includes the repairable equipment or components of the complete system, STTE, and consumable equipment.

6.1.2.2. Supported Technical Data Table – This includes the Technical Data and publications, and training material for which the Contractor will provide support.

6.2. **GENERAL FORMAT**

6.2.1. The LIS must be prepared as an MS Word document with tables.

6.3. **SOFT COPY FORMAT**

6.3.1. The LIS must be provided as an MS Word file.

6.3.2. **Soft Copy format submission size below 7MB** – The LIS may be submitted via email as follows:

6.3.2.1. To Field: As per the related CDRL section 9.A. Addressee, as identified in the contract.

6.3.2.2. Subject Field: MUAS-ILS-213 – LIS – [Rev #] – [Date of Issue]

6.3.3. **Soft Copy format submission size at or above 7MB** – The LIS file must be submitted on CD or DVD media and be labelled as follows:

6.3.3.1. Mini Unmanned Aerial System

6.3.3.2. LIS

6.3.3.3. MUAS-ILS-213;

6.3.3.4. The Revision number, and

6.3.3.5. The date of issue.

Supported Equipment and Spares Table

An explanation of each column is detailed below:

1. System Identifier MRN/OEM Part No – A unique identifier for the Item, as used in the applicable technical manuals or supply management system.

2. Item Nomenclature – The name of the Item that may include Item class/group categories and functional descriptors.
3. NATO Stock Number (NSN) – The 13-digit identifier used in NATO and allied cataloguing systems. The NSN will be included if the Item is to be ordered by DND.
4. Regular or Free-Flow R&O by Item
    a. Repair Cost Estimate (RCE) – Identifies that the item will require a cost estimate before repairs or overhaul can begin.
        i. This is used for regular R&O when equipment is more complex so the TA requires more visibility on what is being proposed, has not yet reached steady-state and is therefore harder to predict typical repair costs/requirements, and repairs occur at a low rate.
    b. Maximum Repair Cost (MRC) – Identifies the maximum amount authorized that includes all labour and material costs, to be expended to repair an item. Repairs above the MRC must be approved by DND before any repair or overhaul work commences. Standard Selection Notice Observation Message procedures as detailed in A-LM-184-001/JS-001 must apply.
        i. This is used for free-flow R&O when equipment repairs are well understood or are less complex, and are used for repairs that occur at a high rate.
5. Repair Turn-Around-Time (TAT) – Identifies the Repair TAT, if different from the general Repair TAT, as defined in Support SOW, indicating that this item is of greater importance to the operation of the MUAS and therefore requires a faster turn-around. Repair TAT is indicated in calendar days; if left blank, then general Repair TAT is followed.

NOTE: INFORMATION IN THIS TABLE WILL BE FINALIZED AFTER DELIVERY AND ACCEPTANCE OF THE PROVISIONING DOCUMENTATION.

Item Identifier MRN/OEM Part No. (1)	Item Nomenclature (2)	NSN (if item can be ordered) (3)	Regular or Free-Flow RCE/MRC (4)	Repair TAT (cal. Days) (5)

Supported Technical Data Table

An explanation of each column is detailed below:

1. Publication Number – The unique identifier for the published Item of Technical Data.

2. Title – The title of the item of Technical Data.

NOTE: INFORMATION IN THIS TABLE WILL BE FINALIZED AFTER DELIVERY AND ACCEPTANCE OF THE TECHNICAL PUBLICATIONS.

Publication Identifier (1)	Title (2)
MUAS-ILS-202	Operator Manual
MUAS-ILS-203	Operator Quick Reference Card
MUAS-ILS-204	Maintenance and Parts Handbook
MUAS-ILS-205	Operator Training Package
MUAS-ILS-206	Preservation, Storage and Reactivation Instructions
MUAS-ILS-207	Provisioning Parts Breakdown
MUAS-ILS-208	Supplementary Provisioning Technical Documentation
MUAS-ILS-213	Controlled and Non-Controlled Goods List

A3.20 **DID – Equipment Environmental Assessment**

DATA ITEM DESCRIPTION	
1. TITLE **Equipment Environmental Assessment (EEA)**	2. IDENTIFICATION NUMBER **DID MUAS-ILS-214**
3. DESCRIPTION The EEA identifies and documents potential environmental impacts of the equipment over the entire life-cycle and the associated mitigation measures required to reduce or eliminate them.	
4. RELATED DOCUMENTS	5. CONTRACT REFERENCE **SOW**: **Para. 5.4.1 (pg. 18)** **CDRL**: **App. A2.2 (pg. 29)**

6. PREPARATION INSTRUCTIONS

6.1. **CONTENT**

6.1.1. **Title Page**

6.1.1.1. Equipment Name and NSN (if available).

6.1.1.2. Assessment Contact: Name, title and company name of the author of the EEA.

6.1.2. **Executive Summary**

6.1.2.1. Provide a brief summary of potential environmental impacts and recommended mitigation measures for each life-cycle (test and evaluation following production, operation and maintenance, and demilitarization and disposal).

6.1.3. **Equipment Description**

6.1.3.1. Equipment description: Provide an overview of the equipment and identify each major sub-system as per the Equipment Breakdown Structure.

6.1.3.2. For each major sub-system, identify the following:

6.1.3.2.1. Hazardous substances that are incorporated into the equipment. Provide additional information in tabular form in Table 1.

6.1.3.2.2. Chemical products listed in Table 1.

6.1.3.2.3. Ionizing radiation sources (radioisotopes and x-ray). e.g. Uranium, Radon, plutonium and tritium etc. in Table 2.

6.1.3.2.4. Non-ionizing radiation sources (radiofrequency and lasers) in Table 2.

6.1.3.3. Provide Safety Data Sheets (SDS) that are less than three years old for all chemical products in accordance with WHMIS 2015 requirements in Annex A for all chemical products.

6.1.4. **Environmental Assessment**

6.1.4.1. For each lifecycle phase (test and evaluation following production, operation and maintenance, and demilitarization and disposal) discuss the following:

6.1.4.1.1. Lifecycle activities: Describe anticipated activities (including operator and maintenance tasks that are detailed in Contractor provided Technical Documentation) and identify if any of these activities have the potential to: release a polluting substance to air, water or land (e.g. exhaust emissions, hazardous waste, spills, etc.); impact human health; noise or vibration; and/or alter landscape features. Note: The scope of the EEA excludes activities related to the use of munitions.

6.1.4.1.2. Environmental impacts: Describe the potential environmental impacts identified above.

6.1.4.1.3. Mitigation Measures: Describe mitigation measures to eliminate or reduce identified potential environmental impacts, including those that are part of the design, any warning devices,

emission control equipment, spill response, safe handling and disposal procedures, training, PPE, labels on equipment, cautions and warnings in the Technical Documentation, monitoring or inspections, etc.

6.1.5. **Conclusions and Recommendations**

6.1.5.1. Summarize the main environmental impacts and recommended mitigation measures.

6.1.6. **References**

6.1.6.1. List references consulted in the completion of the tables (such as Canadian legislation, DND policies and procedures, technical documentation, etc.).

6.1.7. **Table 1 - Identification of Hazardous Substances and Chemical Products**

Table 1 lists the integrated hazardous substances and chemical products that must be identified, if they are incorporated in the equipment design. The hazardous chemical products must have safety data sheets (SDS) which conform to WHMIS 2015, and must be provided in Annex A.

Integrated Hazardous Substances	**NSN**	**Original OEM Part Number**	**Item Description**	**Location**	**Additional Details**
Arsenic, Cadmium, Chromium VI, Cobalt, Lead, Radioactive metals					
Halocarbons – refrigerant and air-conditioning systems					Type and weight (kg). Global Warming Potential of Hydrofluorocarbons used for refrigerant applications.
Mercury and its compounds					Form of mercury (e.g. liquid, vapour) and weight (mg)
Polychlorinated Biphenyl (PCBs)					Form (liquid or solid), quantity (kg), volume (L) and concentration in ppm
Hazardous Chemical Products (SDS Required)	**NSN**	**Original OEM Part Number**	**Ingredient**	**Chemical Abstract Service Number (CAS#)**	**Controls***
Halocarbons – Fire extinguishing systems					
Halocarbons – In aerosol Products					
Paints and related commodities (CARC and non-CARC)					
Fire-fighting Foams					
Cleaner and Degreasers					
POLs (Petroleum, Oils, Lubricants)					
Adhesives					
Anti-seize					
Corrosion Inhibitor					
Decontaminant					
Detector Kit Chemical substances					

*Controls: Identify if the substance is regulated under the Canadian Environmental Protection Act, targeted in Schedule 1, Toxic Substance List under CEPA and/or subject to the reporting requirements under the National Pollutant Release Inventory (NPRI).

6.1.8. **Table 2 – Identification of radiation sources and batteries**

Table 2 lists the ionizing and non-ionizing radiation sources and batteries.

Categories	**NSN**	**Original OEM Part Number**	**Item Description**	**Location ***	**Additional Details**
Non-ionizing radiation					Type of electromagnetic energy (laser, microwave, radio frequency) and strength
Ionizing radiation					Type and quantity or activity level

Batteries					Type

* Identify the system/sub-system where these items are located.

6.1.9. **Annex A – Safety Data Sheets SDS for all chemical products identified in the EEA**

6.2. **SOFT COPY FORMAT**

6.2.1. The EEA must be provided as a PDF file.

6.2.2. **Soft Copy format submission size below 7MB** – The EEA may be submitted via email as follows:

6.2.2.1. To Field: As per the related CDRL section 9.A. Addressee, as identified in the contract.

6.2.2.2. Subject Field: MUAS-ILS-214 – EEA – [Rev #] – [Date of Issue]

6.2.3. **Soft Copy format submission size at or above 7MB** – The EEA file must be submitted on CD or DVD media and be labelled as follows:

6.2.3.1. Mini Unmanned Aerial System

6.2.3.2. EEA

6.2.3.3. MUAS-ILS-214;

6.2.3.4. The Revision number, and

6.2.3.5. The date of issue.

ANNEX B

STATEMENT OF WORK

FOR THE SUPPORT OF THE

MINI UNMANNED GROUND VEHICLE SYSTEM

Version/Amendment History

Version/Amendment	Date	Notes
Original	July 18 2022	

TABLE OF CONTENTS

1.0 SCOPE

1.1 Purpose

1.1.1 The purpose of this Statement of Work (SOW) is to describe DND's requirements for work to be carried out by the Contractor, including the provision of material and Repair & Overhaul (R&O), in support of the Mini Unmanned Ground Vehicle System (MUGVS).

1.1.2 Work will be conducted and completed either in Canada at Canadian Armed Forces (CAF) locations, at operational sites where CAF are deployed, or at the Contractor's plant.

1.2 Concept of Operations & Support

1.2.1 The Concept of Operations provides context necessary to fully understand the SOW.

Aspect	Description
Anticipated service life	10 to 15 years
Annual operating hours	Difficult to predict because of intermittent usage. Continuous operation when in use.
DND Responsibilities for Maintenance	The MUGVS will be maintainable by CAF operators and technicians in a field environment as prescribed for each item of equipment: **Operator Maintenance** – consisting of maintenance that will not require Special Tools and Test Equipment (STTE) to complete, as well as equipment cleaning. Task duration generally less than one (1) hour. **Technician Maintenance, First Line** – consisting of preventive and minor corrective maintenance tasks by repair or replacement of parts, and could require STTE to complete this maintenance. Task duration generally less than four (4) hours. **Technician Maintenance, Second Line** – consisting of corrective maintenance requiring additional tools, specialized personnel, STTE, or controlled environmental conditions. Task duration generally between four (4) and 24 hours.
Contractor Responsibilities for Maintenance	The more in-depth maintenance tasks, consisting of corrective maintenance tasks, reconditioning of assemblies and component rebuilds, will be done through this support contract.
Contractor Training Responsibility	Contractor will provide Operator and Technician training as and when required. Training material is being provided through the Acquisition Contract.

1.3 Land Equipment Management System

1.3.1 The Contractor should be familiar with the Land Equipment Management System (LEMS) that is documented in B-GL-342-001/FP-000, which describes the DND approach to the management of land equipment.

1.4 Contractors Performing R&O

1.4.1 Some of the work performed by the Contractor will be repair and overhaul of equipment. The *Special Instructions Repair and Overhaul Contractors* (A-LM-184-001/JS-001) describes the instructions and procedures governing civilian contractors engaged in the R&O of material on behalf of the DND.

1.5 Acronyms and Abbreviations

AAS	Accountable Advance Spares
AEFC	Army Equipment Fielding Center
AWR	Additional Work Request
CA	Contracting Authority
CAF	Canadian Armed Forces
CER	Combat Engineer Regiment
CDRL	Contract Data Requirements List
CFB	Canadian Forces Base
CFSD	Canadian Forces Supply Depot
CFSME	Canadian Forces School of Military Engineering
CGCS	Canadian Government Cataloguing System
CIS	Contract Issue Spares
CORE	Designates CORE (fixed price basis) requirements
CRPA	Contractor Repair Parts Account
CRCI	Catalogue of Repairable and Consumable Items
CSA	Canadian Standards Association
CSR	Contract Status Report
DGLEPM	Director General Land Equipment Program Management
DID	Data Item Description
DND	Department of National Defence
DRMIS	Defence Resources Management Information System
DSCO	Director Supply Chain Operations
EMT	Equipment Management Team
ESR	Engineer Support Regiment
FSR	Field Service Representative
GFOS	Government Furnished Overhaul Spares
IAW	In Accordance With
ILS	Integrated Logistic Support
IP	Intellectual Property
ITAR	International Traffic in Arms Regulations
LEMS	Land Equipment Maintenance System
MRC	Maximum Repair Cost
NATO	North Atlantic Treaty Organization
NCAGE	NATO Commercial and Government Entity
NSN	NATO Stock Number

NTM	Notice to Move
OEM	Original Equipment Manufacturer
PA	Procurement Authority
PDF	Portable Document Format
PM	Program Management
PSPC	Public Service and Procurement Canada
R&O	Repair and Overhaul
RbR	Repair by Replacement
RCE	Repair Cost Estimate
RGC	Régiment de génie de combat
RMA	Repair Material Account
RSA	Repair Shop Account
SMP	Support Management Plan
SNAPS	Selection Notice and Priority Summary
SOW	Statement of Work
SPTD	Supplementary Provisioning Technical Documentation
STTE	Special Tools and Test Equipment
TA	Technical Authority
TASKING	Designates TASKING (as and when needed) requirements
TAT	Turn-around-time
TDP	Technical Data Package
TDPL	Technical Data Plan & List
TIES	Technical Investigation and Engineering Support
TPM	Technical Problem Management

2.0 APPLICABLE DOCUMENTS

2.1 References

2.1.1 Whereas mentioned, the following Standards must be used for the preparation of deliverables to the extent specified in this SOW:

REFERENCE NUMBER	PROMULGATION DATE	REFERENCE TITLE
A-LM-184-001/JS-001	2019-05-06	SPECIAL INSTRUCTIONS REPAIR AND OVERHAUL CONTRACTORS
SAE ANSI/EIA-649C	2019	CONFIGURATION MANAGEMENT STANDARD
B-GL-342-001/FP-000	2001-09-10	LAND EQUIPMENT MANAGEMENT SYSTEM (LEMS)
C-02-005-009/AM-000	2019-10-31	INSPECTION AND CONDITIONING OF MATERIAL RETURNED TO AND HELD IN THE SUPPLY SYSTEM
D-01-100-214/SF-000	2020-09-30	SPECIFICATION - PREPARATION OF PROVISIONING DOCUMENTATION FOR CANADIAN FORCES EQUIPMENT
D-01-400-001/SG-000	2021-09-30	STANDARD - ENGINEERING DRAWING PRACTICES
D-LM-008-001/SF-001	1983-02-03	METHODS OF PACKAGING
D-LM-008-002/SF-001	1991-08-01	SPECIFICATION FOR MARKING FOR STORAGE AND SHIPMENT
D-LM-008-011/SF-001	1988-11-10	PREPARATION AND USE OF PACKAGING REQUIREMENTS CODES
SOR/2003-289		FEDERAL HALOCARBON REGULATIONS
SOR/2008-273		PCB REGULATIONS
SOR/2014-254		PRODUCTS CONTAINING MERCURY REGULATIONS
SOR/2016-137		OZONE-DEPLETING SUBSTANCES AND HALOCARBON ALTERNATIVES REGULATIONS

2.2 Order of Precedence

2.2.1 In the event of conflict between the content in this SOW and the referenced documents, the content of this SOW will take precedence.

3.0 R&O REQUIREMENTS

3.1 Program Management

3.1.1 General

3.1.1.1 Contractor Test Facilities

3.1.1.1.1 The Contractor must possess or have access to testing facilities required to confirm serviceability of the equipment after repair or upgrade work on the MUGVS or its equipment.

3.1.1.2 Contractor Publication Resources

3.1.1.2.1 The Contractor, or their sub-Contractor, must have office resources necessary to produce electronic manuals, technical drawings, and other logistics and engineering documentation.

3.1.2 Program Meetings

3.1.2.1 Meeting Organization and Coordination

3.1.2.1.1 The Contractor must ensure that the necessary data, personnel and facilities are available for each meeting.

3.1.2.1.2 As appropriate, meetings may be held at the Contractor's or DND facilities at the discretion of the DND EMT.

3.1.2.1.3 The Contractor's Program Manager must be present at all meetings. If the Program Manager does not have final approval authority for decision making and changes, then the person that has that final approval authority must also be present at all meetings.

3.1.2.2 Kick-off Meeting

3.1.2.2.1 The Contractor must hold and chair, along with Canada, a Kick-off Meeting no later than 21 calendar days after contract award, to review and secure a common understanding of the requirements expressed in this contract.

3.1.2.3 Other meetings

3.1.2.3.1 The Contractor and the DND EMT may schedule informal reviews, such as conference calls, webinars (conference calls augmented by simultaneous PowerPoint presentations on the Internet), video conferences, briefings and technical interchange meetings, as required to help achieve the requirements of the contract.

3.1.2.4 Meeting Documentation

3.1.2.4.1 The Contractor must provide Meeting Agendas IAW CDRL MUGVS-PM-001 at Appendix A2.2 (page 24) and its associated DID MUGVS-PM-001 at Appendix A3.3 (page 26).

3.1.2.4.2 The Contractor must record and provide the Meeting Minutes IAW CDRL MUGVS-PM-002 at Appendix A2.2 (page 24) and its associated DID MUGVS-PM-002 at Appendix A3.4 (page 28).

3.1.2.4.3 No change in the interpretation of the program management, SOW, cost, or schedule, as defined in the contract, may be authorized by the minutes of a meeting. Such change must require formal contract amendment by the CA.

3.1.3 Government Property

3.1.3.1 All equipment / spares / parts that may be provided to the Contractor in support of the MUGVS, including those purchased during the contract, must be considered DND-owned, regardless of being held at the Contractor's facility.

3.1.3.1.1 Government-owned and DND-owned must be considered as interchangeable terms.

3.1.3.2 The Contractor must provide suitable protections, such as a separated secure storage facility and insurance, to protect all Government Supplied Materials, including equipment, spares, parts, Technical Data Package (TDP), documentation, software, and Special Tools & Test Equipment.

3.1.4 DND Material Supply Logistics

3.1.4.1 The Contractor must refer to section A4.0 and A-LM-184-001/JS-001, for further requirements for equipment logistics for DND-owned equipment.

3.1.4.2 Supply Accounts for DND-owned Material

3.1.4.2.1 The Contractor will be allocated a Repairable Material Account (RMA). All material (generally prime equipment and Line Replaceable Units that are DND-owned) shipped to the Contractor must be identified in the Defence Resource Management Information System (DRMIS) against the assigned RMA.

3.1.4.3 Contract Issue Spares

3.1.4.3.1 The Contractor must maintain visibility of DND-owned material, classified as Contract Issue Spares (CIS).

3.1.4.3.1.1 To account for these CIS, the Contractor will be allocated a Contractor Repair Parts Account (CRPA) and a Repair Shop Account (RSA).

3.1.4.4 Stock Control and Stock Taking (DND-owned Material)

3.1.4.4.1 The Contractor must perform stock control and stocktaking of DND-owned Contractor held inventory, including:

3.1.4.4.1.1 Institute, maintain and apply a system for inventory accounting, control, storage and handling, preservation, protection and maintenance.

3.1.4.4.1.2 Designate, allocate and prepare a storage area in its facility specifically to accommodate DND-owned stock.

3.1.4.4.1.3 As a risk mitigation measure, in case of a strike or lockout action, ensure that DND has continued access to, and protection of, inventory that it requires in support of operations.

3.1.4.4.1.4 Initiate and complete a one hundred per cent (100%) manual stocktaking (visual confirmation) of RMA, RSA, CRPA (CIS) and all material listed in the Contractor Held Inventory Report, one (1) time each year.

3.1.4.4.1.5 The Contractor must promptly conduct investigations into every discrepancy arising from stocktaking of Contractor managed DND-owned material, and must immediately notify DND of all deficiencies that are discovered.

3.1.5 Hazardous Materials

3.1.5.1 The Contractor must be solely responsible for the handling, transportation and disposal of all waste, and hazardous waste material generated as a result of the work in this SOW.

3.1.6 Environmental Management and Assessment

3.1.6.1 General

3.1.6.1.1 The Contractor must use low-risk chemical products for equipment maintenance and repair where feasible. Low-risk chemical products are defined as those that do not contain substances regulated under the Canadian Environmental Protection Act, 1999 (CEPA) and listed on Schedule 1 of CEPA.

3.1.6.1.2 The Contractor is responsible for ensuring that all work carried out on DND equipment by staff, or duly appointed sub-contractors, is:

3.1.6.1.2.1 Completed using personnel qualified and certified in the scope of work that they are undertaking and,

3.1.6.1.2.2 In compliance with all applicable municipal, territorial, provincial, federal environmental protection statutes and regulations.

3.1.6.1.3 The Contractor must provide (when asked) and ensure the use of up-to-date (no older than three (3) years) Material Safety Data Sheets.

3.1.6.1.4 In accordance with the Federal Halocarbon Regulations (SOR/2003-289) and the Ozone-depleting Substances and Halocarbon Alternatives Regulations (SOR/2016-137), any halocarbons that are incorporated into the equipment, must comply with regulations SOR/2003-289 and SOR/2016-137. If such substances must be used, the Contractor must:

3.1.6.1.4.1 Inform the Technical Authority by identifying the substance(s).

3.1.6.1.4.2 Identify the specific location within the equipment and the quantity.

3.1.6.1.5 In accordance with the Products Containing Mercury Regulations (SOR/2014-254), if mercury is present in any part of the equipment, the mercury content limit must comply with the regulation SOR/2014-254. If such substances must be used, the Contractor must:

3.1.6.1.5.1 Inform the Technical Authority by identifying the substance(s).

3.1.6.1.5.2 Identify the specific location within the equipment and the quantity.

3.1.6.1.6 In accordance with the Polychlorinated Biphenyls (PCBs) Regulations (SOR/2008-273), if PCBs are present in any part of the equipment, they must comply with the regulation. If such substances must be used, the Contractor must:

3.1.6.1.6.1 Inform the Technical Authority by identifying the substance(s).

3.1.6.1.6.2 Identify the specific location within the equipment and the quantity

3.1.6.2 Environmental Management System

3.1.6.2.1 The Contractor must implement and maintain an Environmental Management System which is consistent with the principles presented in ISO 14001. Certification to this standard is preferred but not mandatory.

3.1.6.2.2 The Contractor must have a formalized set of procedures and control measures in place to demonstrate environmental compliance and minimize environmental impact of the work.

3.2 Operating, Training & Engineering Support

3.2.1 General

3.2.1.1 A TASKING request defines the scope / objectives and may be initiated by either Canada or by the Contractor. If initiated by the Contractor, the following information must be provided:

3.2.1.1.1 Estimated duration;

3.2.1.1.2 Reporting frequency and format;

3.2.1.1.3 Level of effort, and

3.2.1.1.4 Estimated cost.

3.2.2 Operators and Technical Personnel

3.2.2.1 In order to provide satisfactory operators and technical personnel (Field Service Representatives & Mobile Repair Parties are possibly the same resources), the Contractor must provide the following:

3.2.2.1.1 Operators and technical personnel that can provide training on the MUGVS.

3.2.2.1.2 Operators and technical personnel that can work extended hours and during holidays.

3.2.2.1.3 Operators and technical personnel that can perform in-depth maintenance on the MUGVS.

3.2.2.1.4 Operators and technical personnel that can mentor and advise CAF operators and technicians in the performance of their tasks using the MUGVS.

3.2.2.1.5 Operators and technical personnel that are knowledgeable of the Contractor's engineering and support organization and able to obtain a quick response to queries regarding technical concerns and material status.

3.2.3 Technical Investigation and Engineering Support

3.2.3.1 The Contractor must provide TIES, when and as requested by DND. Such tasks could include:

3.2.3.1.1 Conducting specialized testing;

3.2.3.1.2 Performing specialist engineering studies, such as human factors, survivability, electromagnetic interference/compatibility, safety and health, reliability and maintainability;

3.2.3.1.3 Providing engineering assessments and recommendations (for example, regarding trends, failures (including repetitive failures), defects, safety hazards, corrosion, and technology insertion);

3.2.3.1.4 Developing alternate or supplementary operating, maintenance, and supply procedures;

3.2.3.1.5 Rationalizing the preventive maintenance requirements in areas where there is a potential for significant improvements in maintenance effectiveness or efficiency;

3.2.3.1.6 Preparing technical bulletins and preparing supporting technical data;

3.2.3.1.7 Developing repair schemes for potential repairs not covered in maintenance manuals;

3.2.3.1.8 Preparing additional publications or amendments to existing publications;

3.2.3.1.9 Translating technical publications into either Canadian official language (English or Canadian French);

3.2.3.1.10 Performing post battle damage assessments, and determine how to return equipment to a serviceable state, or if it can be cannibalized for parts;

3.2.3.1.11 Designing and developing modifications/upgrades/conversions, updating drawings, preparing modification installation instructions and providing modification installation kits;

3.2.3.1.12 Investigating software faults, and viruses, and develop solutions. Update software embedded in the system or its associated equipment;

3.2.3.1.13 Assessing regulatory compliance, especially regarding safety and protection of the environment;

3.2.3.1.14 Obtain CSA/UL or equivalent safety certifications for the equipment that has been modified or repaired through the work under this contract.

3.2.3.2 On completion of the TIES, the Contractor must report its findings to the DND TA within 14 calendar days, or another timeframe agreed to by the DND TA.

3.3 Maintenance Support

3.3.1 General

3.3.1.1 The terms ‘repair’ and ‘overhaul’ are defined as follows:

3.3.1.1.1 Repair - The identification and correction of those specific defects which degrade the performance of an item, causing it to function below its specification or not as described in its operations manual.

3.3.1.1.2 Overhaul - The restoration of an item to its original condition and life expectancy. It includes the replacement of worn, damaged or life expired parts; the incorporation of approved modifications; and the rework of components as necessary.

3.3.1.2 The Contractor must provide Maintenance Support, including Repair and Overhaul (R&O), for the repairable items listed in A1.0 List of Items to be Supported (page 20).

3.3.1.3 The Contractor must perform R&O in accordance with this SOW, A-LM-184-001/JS-001 Special Instructions Repair and Overhaul Contractors, and the Quality Assurance requirements stated in para. 3.3.4, such that the CAF will be provided with functional, safe and reliable MUGVS.

3.3.1.4 The Contractor must use parts and materials as per the most recent or OEM design configuration.

3.3.1.4.1 Changes to the parts, equipment configuration, or design must be approved by the TA, and executed in accordance with the SOW.

3.3.2 Minimum and Forecasted Repairs

3.3.2.1 The minimum number of items that may be processed through the R&O facility may be zero.

3.3.2.2 The Current Year Forecast and Next Year Forecast quantity is dependent upon the quantity in service and operational urgency, and is defined in Appendix A1.0 List of Items to be Supported (page 20).

3.3.2.3 Updates to the Current Year Forecast and Next Year Forecast will be provided through the Selection Notice and Priority Summary (SNAPS) Report as detailed in A-LM-184-001/JS-001.

3.3.3 Extent of R&O Maintenance

3.3.3.1 The Contractor must provide R&O Maintenance support to the extent listed here:

3.3.3.1.1 Materials - All equipment system components must be inspected and repaired as required. Defective components shall be repaired or replaced.

3.3.3.1.2 Mechanical - All mechanical systems must be inspected and repaired as required. Defective components must be repaired or replaced.

3.3.3.1.3 Electrical - All electrical components must be inspected, tested and repaired as required. Defective components must be repaired or replaced.

3.3.3.1.4 Safety - All systems/components affecting the safety of the user/operator or those affecting hazardous operation of the equipment must be inspected and tested for correct operation. Defective components must be replaced. All warning decals, labels, data plates must be clear and legible.

3.3.4 Quality Assurance

3.3.4.1 Quality of R&O Work

3.3.4.1.1 The R&O must be performed in accordance with this SOW and the Quality Assurance requirements stated herein, such that the CAF will be provided with functional, safe and reliable equipment. In the case of differences among these references, this SOW takes precedence.

3.3.4.2 Quality Assurance Representative

3.3.4.2.1 All stages of the R&O procedures will be subject to inspection by a Canadian Government DND Quality Assurance Representative unless DND authorizes otherwise. The representative will monitor for best industrial practices and will have the authority to stop work if poor practices or dangerous conditions are noted and cannot be resolved on-site.

3.3.4.3 Testing and Inspection

3.3.4.3.1 The Contractor must perform testing to confirm serviceability for each piece of repaired/overhauled equipment.

3.3.4.3.2 The Contractor must prepare a test report in the Contractor's format. A copy of the report must be retained by the Contractor and a copy forwarded electronically to the TA.

3.3.4.3.3 The Contractor must visually inspect all completed equipment for security of components and hazardous conditions, and all deficiencies must be noted and repaired.

3.3.5 Repair Turn-Around-Time (TAT)

3.3.5.1 The Contractor must complete repairs **within ninety (90) calendar days from receipt**, unless otherwise indicated in Appendix A1.0 List of Items to be Supported (page 20) or by the DND EMT.

3.3.5.1.1 The repair TAT includes all the time that the item requiring repair is in the custody of the Contractor, from receipt at the handover point to return to the handover point.

3.3.5.2 In the case of a priority repair request, system-level refurbishment, or battle damage repair, the DND EMT will provide a SOW defining the scope of work and new schedule, as a TASKING.

3.3.6 Repair Cost Estimates (RCE)

3.3.6.1 Upon receipt of the Repairable Items indicating an RCE, as shown items in Appendix A1.0 List of Items to be Supported (page 20), the Contactor must provide an RCE including all labour, sub-contracting and shipping, materiel costs and administration fees to the TA for approval before the repair can proceed.

3.3.6.2 If DND provides spare parts to the Contractor, or spare parts are already Contractor Held and Managed, the Contractor must deduct the value of the parts from the RCE of the item for which the parts are intended.

3.3.7 Condemn/Scrapping Considerations

3.3.7.1 If it is decided not to repair the equipment, the DND EMT will provide guidance on scrapping procedures to the Contractor at that time.

3.3.7.2 If the equipment contains embedded software (and possibly data) it may be necessary to erase the stored software and data prior to disposing of the equipment. In such cases, the Contractor must seek direction from the DND EMT.

3.3.7.3 When DND-owned equipment is to be scrapped, the Contractor must take care to comply with all International Traffic in Arms Regulations (ITAR) regarding the disposal method used and record keeping.

3.3.7.3.1 Guidance on disposal is available through assigned Demilitarization Codes.

3.3.8 Software Maintenance

3.3.8.1 The Contractor must perform routine software maintenance including software installation, data load and unload, backup and recovery, release replication and distribution.

3.3.9 Provision of Material (R&O)

3.3.9.1 The Contractor must obtain the parts (repairable and consumable items) required for the R&O Maintenance Support, including locating sources of supply.

3.3.9.2 The Contractor must obtain and make available parts for **'Repair by Replacement'** (RbR) situations, where the repair can be done in the field.

3.3.9.2.1 RbR situations also apply to parts that are required so rarely that they would never be stocked in depot, and the cost is minimal compared to the transport cost of shipping the MUGVS back for R&O Maintenance Support at the Contractor's site.

3.3.9.2.2 RbR parts would be requested on an as and when required basis that will be detailed in a DND 626 Task Authorization.

4.0 CONTRACT DELIVERABLES

4.1 Repaired Material

4.1.1 The Contractor will receive direction from the TA for the final delivery destination of all repaired materiel on an individual basis; however, if not received the default delivery will be to 7 Canadian Forces Supply Depot.

4.1.2 The Contractor must include a properly completed and signed CF942/CF942A Materiel Condition Tag/Label, when applicable, IAW C-02-005-009/AM-000 Inspection and Condition of Materiel Returned to and Held in the Supply System, for all returned items.

4.1.2.1 The CF942/CF942A Tags/Labels are to be directly attached to the materiel returned after repair and overhaul IAW C-02-005-009/AM-000, and will be provided by DND Quality Assurance Representative.

4.2 R&O Service Record and Test Report

4.2.1 The Contractor must provide an R&O Service Record and Test Report with each piece of equipment for shipment, returning from R&O.

4.3 Data Deliverable List

4.3.1 The Contractor must prepare and deliver all data deliverables required under the Contract as summarized in para. 4.4.

Note: ‘LOT’ equates to a varied quantity needed to fulfill the requirements of the CDRL.

4.4 List of Support Requirements & Data Deliverables

Item	Item Description	Initial Submission/ Delivery QTY	Subsequent Submissions / Replenishment
1	Program Management – work performed continuously under a fixed price basis.	As defined in section 3.1 within Annex A	-
2	Meeting Agenda (para 3.1.2.4.1)	1	LOT
3	Meeting Minutes (para 3.1.2.4.2)	1	LOT
4	Operator, Training & Engineering Support – work performed through DND 626 Task Authorization process (as-and-when requested work).	As defined in section 3.2 Within Annex A	-
5	R&O Maintenance Requirements – work performed as a pre-authorized R&O repair	As defined in section 3.3 Within Annex A	-
6	R&O Service Record and Test Report	LOT – with the equipment for shipment	LOT – with the equipment for shipment

A1.0 APPENDIX: LIST OF ITEMS TO BE SUPPORTED

A1.1 Supported Equipment and Spares

A1.1.1 The Contractor must provide support for the equipment and spare items specified in Table 1 in accordance with the SOW. An explanation of each column is detailed below:

A1.1.1.1 System Identifier MRN/OEM Part No – A unique identifier for the Item, as used in the applicable technical manuals or supply management system.

A1.1.1.2 Item Nomenclature – The name of the Item that may include Item class/group categories and functional descriptors.

A1.1.1.3 NATO Stock Number (NSN) – The 13-digit identifier used in NATO and allied cataloguing systems. The NSN will be included if the Item is to be ordered by DND.

A1.1.1.4 Regular or Free-Flow R&O by Item

A1.1.1.4.1 Repair Cost Estimate (RCE) – Identifies that the item will require a cost estimate before repairs or overhaul can begin.

A1.1.1.4.1.1 This is used for regular R&O when equipment is more complex so the TA requires more visibility on what is being proposed, has not yet reached steady-state and is therefore harder to predict typical repair costs/requirements, and repairs occur at a low rate.

A1.1.1.4.2 Maximum Repair Cost (MRC) – Identifies the maximum amount authorized that includes all labour and material costs, to be expended to repair an item. Repairs above the MRC must be approved by DND before any repair or overhaul work commences. Standard Selection Notice Observation Message procedures as detailed in A-LM-184-001/JS-001 must apply.

A1.1.1.4.2.1 This is used for free-flow R&O when equipment repairs are well understood or are less complex, and are used for repairs that occur at a high rate.

A1.1.1.5 Repair Turn-Around-Time (TAT) – Identifies the Repair TAT, if different from the general Repair TAT, as defined in Support SOW, indicating that this item is of greater importance to the operation of the MUGVS and therefore requires a faster turn-around. Repair TAT is indicated in calendar days; if left blank, then general Repair TAT of 90 calendar days is followed.

A1.1.1.6 Current Year & Next Year Forecasts – Identifies the expected quantity, by fiscal year, of repairable equipment that will be passed through the R&O line.

Table 1: Supported Equipment and Spares

Item Identifier MRN/OEM Part No. (1)	Item Nomenclature (2)	NSN (if item can be ordered) (3)	Regular or Free-Flow RCE/MRC (4)	Repair TAT (cal. Days) (5)	Current Year Forecast 22/23 (6)	Next Year Forecast 23/24 (7)
	MUGVS		RCE			

A2.0 APPENDIX: CONTRACT DATA REQUIREMENTS LIST

A2.1 Management and Explanation of the CDRL

A2.1.1 Management of Data Items

A2.1.1.1 The Contractor must review, update and deliver amendments, or confirm the continuing accuracy of data items annotated with a maintenance period, in accordance with the CDRL.

A2.1.1.2 The Contractor must deliver amended, reissued or resubmitted data items to the location(s) and in the format and quantities specified in the CDRL for the initial submission of the data items.

A2.1.2 Explanation of the CDRL

A2.1.2.1 **CDRL Line Number** – This field provides the unique sequential number that identifies each data item within different functional groups (eg, PM-001, SE-101, & ILS-201).

A2.1.2.2 **CDRL Title** – This field identifies the title of the data item.

A2.1.2.3 **SOW Para Ref** – This field shows the paragraph in the SOW where the data item is stipulated. There may be multiple references to the data item in the SOW, but generally only the first (or one) reference is shown in the CDRL.

A2.1.2.4 **Version** – This field identifies the particular delivery of a data item during its lifecycle (ie, draft, final).

A2.1.2.5 **Delivery Schedule** – This field specifies the date(s) and/or events by which the data item is required to be delivered. The date of delivery applies to all delivery locations and quantities unless otherwise specified. Following are some of the abbreviations and symbols used with this column:

A2.1.2.5.1 'KO' means the Kick-Off Meeting date;

A2.1.2.5.2 Numerals indicate the number of Calendar Days, unless specified otherwise;

A2.1.2.5.3 '+' means after the specified date or event; and

A2.1.2.5.4 '-' means before the specified date or event.

A2.1.2.5.5 If a data item is required to be delivered before an event having a duration of greater than one day, delivery date must be calculated from the first day of that event. If a data item is required to be delivered after an event having a duration of greater than one day, the delivery date must be calculated from the last day of that event.

A2.1.2.6 **Quantity** – This field specifies the total number of data items to be delivered to the associated delivery location(s), including the number of hard (H) and soft (S) copies. When both hard and soft copies are requested, the action copy will be indicated in the notes column.

A2.1.2.7 **Addressee** – This field shows the short title of the DND representative to whom the hard and soft copies of the data items must be delivered. The action hard copy of the data item must be delivered to the first nominated location in this field.

A2.1.2.8 **Data Item Description Reference** – This field provides the identification of the DID with which the data item must comply.

A2.1.2.9 **DND Action Period** – This field defines the number of Calendar Days available to the DND to action the data item and respond to the Contractor, if that action requires a response.

A2.1.2.9.1 The period begins upon the date the action copy of the data item is received at the first nominated addressee.

A2.1.2.9.2 The action period applies to all deliveries, including first deliveries, amendments and re-issues. If a data item is delivered earlier than the first delivery date shown in the CDRL, the DND is not obliged to action it until after that date. If the action period states 'by MSR' for a data item delivered prior to a Mandated System Review (MSR), the action period ends when the minutes for that MSR are approved.

A2.1.2.10 **DND Action Required** – This field indicates the purpose for which the data item is being submitted to the DND, which will either be for Review, Approval or Acceptance.

A2.1.2.11 **Maintenance** – This field specifies either the timings or the time intervals, after each delivery, at which the data item must be reviewed by the Contractor and either have its continuing accuracy status confirmed in writing, or be updated and reissued. The Maintenance column does not apply to draft or preliminary versions of data items. The following abbreviations and codes are applicable to this column:

A2.1.2.11.1 xM – every x calendar months;

A2.1.2.11.2 R – to enable it to be considered at each MSR set out in the System Engineering program;

A2.1.2.11.3 SA – to enable it to be provided for the purposes of conducting Acceptance of each System;

A2.1.2.11.4 FA – to enable it to be provided for the purposes of Final Acceptance; and

A2.1.2.11.5 NA or blank – not applicable.

A2.1.2.12 Notes: Where necessary, additional explanatory information relating to a CDRL data item is provided in this column.

A2.2 CDRL Item List

CDRL #	CDRL Title	SOW Para Ref	Version	Delivery Schedule	Qty	Addressee	DID # and Ref	DND Action Period	DND Action Required	Maint	Notes
MUGVS-PM-001	Meeting Agenda	Para. 3.1.2.4.1 (pg. 10)	Draft	Meeting Date - 7	1S	CA, TA, PA	MUGVS-PM-001	5	Review		
			Revised	Meeting Date - 1	1S	CA, TA, PA	App. A3.3 (pg. 26)				
			Final	Meeting Date	1H	CA, TA, PA		7	Review or Acceptance		
MUGVS-PM-002	Meeting Minutes	Para. 3.1.2.4.2 (pg. 11)	Draft	Meeting Date + 7	1S	CA, TA, PA	MUGVS-PM-002	7	Review		
			Revised or Final	DND Comments + 7	1S	CA, TA, PA	App. A3.4 (pg. 28)	7	Review or Acceptance		

A3.0 APPENDIX: DATA ITEM DESCRIPTION

A3.1 Data Deliverable Format

A3.1.1 **Unless otherwise specified as a specific requirement, the Contractor must deliver all of the soft copies of data deliverables, in formats compatible with the office software currently in use by the DND as listed:**

A3.1.1.1 Microsoft (MS) Windows 10 Enterprise Operating System (OS);

A3.1.1.2 MS Edge 2019;

A3.1.1.3 MS Office Professional Plus 2013 (Word, Excel, Access, PowerPoint and Outlook); and

A3.1.1.4 Foxit PhantomPDF version 10;

A3.2 DID Table Definitions

The following section defines the various blocks of information found on the Data Item Description (DID) forms:

BLOCK 1 – TITLE
The title of the data item for the DID.

BLOCK 2 - IDENTIFICATION NUMBER
The Data Item Description (DID) number, consisting of a sequential three-digit number and prefixed with an abbreviation code, to uniquely identify the DID. Note that the 001-099 series is reserved to Program Management (PM) DIDs, the 101-199 series is reserved to Systems Engineering (SE) DIDs and the 201-299 series is reserved to Integrated Logistics Support (ILS) DIDs. The abbreviation codes used for the prefix are:

“PM” for Program Management
“SE” for Systems Engineering
“ILS” for Integrated Logistics Support

BLOCK 3 - DESCRIPTION
Provides a general description of the data content requirements.

BLOCK 4 – RELATED DOCUMENT(S)
Provides a listing of the related documents and specifications associated with and required to produce this DID.

BLOCK 5 - CONTRACT REFERENCE
The specific paragraph numbers from the Contract Statement of Work and CDRL to assist in identifying the work effort associated with the data item.

BLOCK 6 - PREPARATION INSTRUCTIONS
Provides the preparation instructions for the content and format requirements for the DID.

A3.3 **DID – Meeting Agenda**

DATA ITEM DESCRIPTION	
1. TITLE **Meeting Agenda**	2. IDENTIFICATION NUMBER **DID MUGVS-PM-001**
3. DESCRIPTION The Meeting Agenda contains the venue information and identifies the discussion items to be covered at meetings.	
4. RELATED DOCUMENTS	5. CONTRACT REFERENCE **SOW**: **Para. 3.1.2.4.1 (pg. 10)** **CDRL**: **App. A2.2 (pg. 24)**

6. PREPARATION INSTRUCTIONS

6.1. **CONTENT**

6.1.1. The Meeting Agenda must set forth the venue, identify all requirements and list the discussion items to be covered at the meeting.

6.1.2. Venue. The Meeting Agenda must address the venue as follows:

6.1.2.1. Meeting Identification Number;

6.1.2.2. Purpose;

6.1.2.3. Date, time and location; and

6.1.2.4. Attendees.

6.1.3. Discussion items. The Meeting Agenda must address the discussion items through the following sections:

6.1.3.1. Opening Remarks;

6.1.3.2. Agenda Review;

6.1.3.3. Review of Previous Minutes;

6.1.3.4. Opened Discussion Items;

6.1.3.5. New Discussion Items;

6.1.3.6. Review of Action Items;

6.1.3.7. Next Venue; and

6.1.3.8. Closing Remarks.

6.2. **HARD COPY FORMAT**

6.2.1. The Meeting Agenda must be printed on paper with these characteristics:

6.2.1.1. Weight of no less than 90 gsm;

6.2.1.2. Brightness of no less than 96 ISO brightness;

6.3. **SOFT COPY FORMAT**

6.3.1. The Meeting Agenda must be submitted as a PDF file type.

6.3.2. The Meeting Agenda PDF must be submitted via email (submission size not to exceed 7MB) as follows:

6.3.2.1. To Field: As per the related CDRL section 9.A. Addressee, as identified in the contract.

6.3.2.2. Subject Field: MUGVS-PM-001 – Meeting Agenda – [Rev #] – [Date of Issue]

A3.4 DID – Meeting Minutes

DATA ITEM DESCRIPTION	
1. TITLE **Meeting Minutes**	2. IDENTIFICATION NUMBER **DID MUGVS-PM-002**
3. DESCRIPTION The Meeting Minutes contains the detailed records of proceedings, discussions, decisions and action items from meetings.	
4. RELATED DOCUMENTS	5. CONTRACT REFERENCE **SOW**: **Para. 3.1.2.4.2 (pg. 11)** **CDRL**: **App. A2.2 (pg. 24)**

6. PREPARATION INSTRUCTIONS

6.1. **CONTENT**

6.1.1. The Meeting Minutes must contain the detailed records of proceedings, discussions, decisions and action items from the meeting and be presented through the following sections:

6.1.1.1. General – consisting of meeting identification number, purpose, date, time and location;

6.1.1.2. Attendees, consisting of the organization each person represents, and the identification of the Chairperson(s);

6.1.1.3. Opening Remarks;

6.1.1.4. **Action Item Report** - used to monitor issues, assign responsibility, direct action and track status, history, and progress, and must consisting of:

6.1.1.4.1. Item #; date initiated; required action; assigned actionee; target completion date; cross-reference to all related action items.

6.1.1.4.2. Action Item Report must be **updated** with each meeting and must consisting of:

6.1.1.4.2.1. Action Item current status and the actual date completed;

6.1.1.5. Next Venue;

6.1.1.6. Closing Remarks;

6.2. **SOFT COPY FORMAT**

6.2.1. The Meeting Minutes must be submitted as a PDF file type.

6.2.2. The Meeting Minutes PDF must be submitted via email (submission size not to exceed 7MB) as follows:

6.2.2.1. To Field: As per the related CDRL section 9.A. Addressee, as identified in the contract.

6.2.2.2. Subject Field: MUGVS-PM-002 – Meeting Minutes – [Rev #] – [Date of Issue]

A4.0 LOGISTICS FOR REPAIR AND OVERHAUL CONTRACTS

A4.1 GENERAL INTRODUCTION

A4.1.1 Aim

A4.1.1.1 This Logistic Statement of Work (LOG SOW) is distributed on the authority of the Assistant Deputy Minister (Material) (ADM (Mat)). It will be distributed, as required, internally to ADM (Mat) staff engaged in creating Repair and Overhaul (R&O) Contracts and Procurement Instruments (PI) and those who manage Repair and Overhaul Contracts.

A4.1.1.2 This is a common LOG SOW which will entail contract conditions for Repair and Overhaul contracts for:

A4.1.1.2.1 **In and Out of country:** For step by step instruction on in and out of country repair process refer to Annex B in the A-LM-184-001/JS-001. This model will describe the roles and responsibilities in the end to end repair process.

A4.1.1.2.2 **Major Equipment:** For complete instructions on receipt of Major Equipment, refer to Chapter 2 in the A-LM-184-001/JS-001.

A4.1.1.2.3 **Accountable Advance Spares** For complete instruction on AAS, refer to Chapter 8.2.7 in the A-LM-184-001/JS-001.

A4.1.1.3 This LOG SOW is to be read in conjunction with the A-LM-184-001/JS-001 for additional information. It is to be noted that there are Chapters that are mandatory when using the LOGSOW and must not be removed from the LOGSOW, if the contractor is managing Government Owned Materiel.

A4.1.1.4 It is to be noted that the LOG SOW is to be used primarily as a guide for R&O contracts. It is paramount that this LOG SOW be utilized with minimal changes for reasons of procurement standardization and departmental accountability. However, changes are permissible where there is a need to clarify specific requirements that would apply to equipment/weapon systems undergoing procurement and contract action.

A4.1.1.5 The following Chapters will be identified as mandatory or as applicable.

A4.1.1.6 It is important to understand the system of record (DRMIS) being used in DND and the various account structures in place. Contractors requiring access to DRMIS must obtain a PKI (Public Key Infrastructure) card in accordance with the recently implemented Two-Factor Authentication. All of this information is located in Chapter 1.1 of the A-LM-184-001/JS-001.

A4.1.2 EXTENT OF WORK/TYPES OF EQUIPMENT (Mandatory)

A4.1.2.1 Refer to Chapter 1.2 of A-LM-184-001/JS-001 for further information on the different types of DND Equipment that are authorized for repair and the category types.

A4.2 RECEIPT (Mandatory)

A4.2.1 Refer to Ch. 2.0 of the A-LM 184 for complete instruction on how to process receipts.

A4.2.2 **DISCREPANCIES IN SHIPMENTS (Mandatory)**

A4.2.2.1 The Contractor must action discrepancies in shipments in accordance with Chapter 2.1 of A-LM-184-001/JS-001.

A4.3 WORK CONTROL (Mandatory)

A4.3.1 The Contractor must ensure that the repair of all DND equipment is controlled by a serial numbered work order IAW Chap 3 of A-LM-184-001/JS-001.

A4.3.2 **COMPLETION OF WORK (Mandatory)**

A4.3.2.1 Refer to Chapter 3.1 of A-LM-184-001/JS-001.

A4.3.3 **STOP REPAIR ACTION (Mandatory)**

A4.3.3.1 The Contractor must comply immediately with all stop repair instructions. Detailed procedures are contained in Chapter 3.2 of A-LM-184-001/JS-001.

A4.4 ANNUAL REPAIR FORECAST – SNAPS (As applicable on an exceptional basis)

A4.4.1 Refer to Chapter 4 of the A-LM-184-001/JS-001 for more information.

A4.5 COST CONTROL (Mandatory)

A4.5.1 Refer to Chapter 5.0 of the A-LM-184-001/JS-001 for more information.

A4.6 COSTING RECORDS (Mandatory)

A4.6.1 The Contractor must prepare forms and maintain records IAW Chapter 6.0 of the A-LM-184-001/JS-001.

A4.6.2 **INVOICE/CLAIMS FOR PAYMENT (AAS SPARES) (As applicable)**

A4.6.2.1 The Contractor must submit monthly invoices for AA spare parts, IAW Chapter 6.1 of the A-LM-184-001/JS-001.

A4.7 MAINTENANCE SUPPORT-MINOR REPAIRS (Mandatory)

A4.7.1 Refer to Chapter 7.0 of the A-LM-184-001/JS-001 for more information.

A4.7.2 **MOBILE REPAIR PARTIES (MRPs) (As Applicable)**

A4.7.2.1 Refer to Chapter 7.1 of the A-LM-184-001/JS-001 for more information.

A4.7.3 **EQUIPMENT TURN AROUND TIME (TAT) (Mandatory)**

A4.7.3.1 Refer to Chapter 7.2 of the A-LM-184-001/JS-001 for more information.

A4.7.4 **PRIORITY REPAIR REQUEST (PRR) (Mandatory)**

A4.7.4.1 Refer to Chapter 7.3 of the A-LM-184-001/JS-001 for more information.

A4.7.5 **SPECIAL INVESTIGATIONS & TECHNICAL STUDIES (SITs) (As applicable)**

A4.7.5.1 Refer to Chapter 7.4 of the A-LM-184-001/JS-001 for more information.

A4.7.6 **TECHNICAL INVESTIGATIONS & ENGINEERING STUDIES (TIES) (As Applicable)**

A4.7.6.1 Refer to Chapter 7.5 of the A-LM-184-001/JS-001 for more information.

A4.7.7 **TERMINATION OF CONTRACT (Mandatory)**

A4.7.7.1 Refer to Chapter 7.6 of A-LM-184-001/JS-001.

A4.8 SUPPLY SUPPORT/SUSTAINMENT SUPPORT (Mandatory)

A4.8.1 **TRANSACTION DOCUMENTATION (Mandatory)**

A4.8.1.1 Refer to Chapter 8.1 of A-LM-184-001/JS-001 for more information.

A4.8.2 **CONTRACTOR SUPPLY ACCOUNTING (Mandatory)**

A4.8.2.1 Refer to Ch. 8.2 of A-LM-184-001/JS-001 for explanation of CRPA/CIS.

A4.8.2.2 CONTRACTOR ISSUE SPARES (CIS) MATERIEL RECEIVED OFF CONTRACT/PROCUREMENT (As Applicable)

A4.8.2.2.1 Refer to Chapter 8.2.3 of A-LM-184-001/JS-001 for more information.

A4.8.2.3 SHORTAGE OF CONTRACT ISSUE SPARES (CIS) (As Applicable)

A4.8.2.3.1 Refer to Section 8.2.4 of A-LM-184-001/JS-001 for more information.

A4.8.2.4 ORDERING/RECEIVING CATALOGUED CIS IN DRMIS (As Applicable)

A4.8.2.4.1 Refer to Section 8.2.5 of A-LM-184-001/JS-001 for more information.

A4.8.2.5 GOVERNMENT FURNISHED OVERHAUL SPARES (GFOS) (As Applicable)

A4.8.2.5.1 Refer to Section 8.2.6 of A-LM-184-001/JS-001 for further explanation and detail.

A4.8.2.6 ACCOUNTABLE ADVANCE SPARES (AAS) (As Applicable)

A4.8.2.6.1 Refer to Section 8.2.7 of A-LM-184-001/JS-001 for further explanation and detail.

A4.8.3 **MANAGEMENT OF DND-OWNED SPARES (As Applicable)**

A4.8.3.1 Refer to Chapter 8.3.1 of A-LM-184-001/JS-001 for more information.

A4.8.4 **SPARES REVIEW (As applicable)**

A4.8.4.1 Refer to Chapter 8.4 of A-LM-184-001/JS-001 for more information.

A4.8.4.2 LOAN OF GOVERNMENT FURNISHED INFORMATION/ GOVERNMENT FURNISHED EQUIPMENT (GFI/GFE) (As Applicable)

A4.8.4.2.1 Refer to Section 8.4.1 of A-LM-184-001/JS-001 for further explanation and detail.

A4.8.5 **STOCKTAKING (Mandatory)**

A4.8.5.1 Refer to Section 8.5 of A-LM-184-001/JS-001 for further explanation and detail.

A4.8.6 **SELECTION NOTICE OBSERVATION MESSAGE (SNOM) (Mandatory)**

A4.8.6.1 Refer to Chapter 8.6 of A-LM-184-001/JS-001.

A4.8.7 **EMBODIMENT FEES (As Applicable)**

A4.8.7.1 Refer to section 8.7 of A-LM-184-001/JS-001 for further explanation and detail.

A4.8.8 **LOSS OR DAMAGE TO DND MATERIEL (Mandatory)**

A4.8.8.1 Refer to section 8.8 of A-LM-184-001/JS-001 for further explanation and detail.

A4.8.9 **SCRAP - CUSTODY & DISPOSAL (Mandatory)**

A4.8.9.1 Refer to section 8.9 of A-LM-184-001/JS-001 for further explanation and detail.

A4.8.10 **PACKAGING (Mandatory)**

A4.8.10.1 Refer to section 8.10 of A-LM-184-001/JS-001 for further explanation and detail.

A4.8.11 **REUSABLE CONTAINER (As Applicable)**

A4.8.11.1 Refer to Chapter 8.11 of the A-LM-184-001/JS-001 for more information.

A4.8.12 **TRANSPORTATION/SHIPMENT IDENTIFICATION/MODE OF SHIPMENT/LOSS OR DAMAGE IN TRANSIT/ GENERAL CLAIMS PROCEDURES (Mandatory)**

A4.8.12.1 Refer to Chapter 8.12 of the A-LM-184-001/JS-001 for more information.

A4.9 WARRANTY CONSIDERATION (Mandatory)

A4.9.1 Refer to Chapter 9.0 of the A-LM-184-001/JS-001 for more information.

A4.10 CONTRACTOR USE OF DND EQUIPMENT/PUBLICATIONS (As Applicable)

A4.10.1 Refer to Chapter 10.0 of the A-LM-184-001/JS-001 for more information.

A4.11 PUBLICATIONS (As Applicable)

A4.11.1 Refer to Chapter 11 of A-LM-184-001/JS-001 for more information.

A4.12 OFFICE SERVICES (As Applicable)

A4.12.1 Refer to Ch. 12 of A-LM-184-001/JS-001 for further explanation.

A4.13 MINUTES OF MEETINGS (Mandatory)

A4.13.1 Refer to Ch. 13 of A-LM-184-001/JS-001 for further explanation.

A4.14 PLANT SHUTDOWN/VACATION PERIOD (Mandatory)

A4.14.1 Refer to Ch. 14 of A-LM-184-001/JS-001 for further explanation.

A4.15 REPORTS (Mandatory)

A4.15.1 Refer to Ch. 15 of A-LM-184-001/JS-001 for a complete list of reports available to contractors.

ANNEX C

FINANCIAL COSTING

MINI UNMANNED AERIAL SYSTEM

PART ONE - ACQUISITION FINANCIAL COSTING TABLE

MANDATORY COMPLETION OF EACH PRICE "BOX". IF THERE IS NO COST PLEASE INSERT "0" or Nil.

Item #	Item Description	Qty	Unit price	Total price
1	MUAS (para. A1.0)	160		
2	Contract Master Schedule (para. 3.2.1)	1		
3	Contract Status Report (para. 3.3.1)	LOT		
4	Kick-off Meeting (para. 3.4.2) Meeting Agenda (para. 3.4.5.1.1) Meeting Minutes (para. 3.4.5.1.2)	1		
5	ILS Meeting (para. 3.4.3) Meeting Agenda (para. 3.4.5.1.1) Meeting Minutes (para. 3.4.5.1.2)	1		
6	Application for Spectrum Supportability (para. 4.3.2)	1		
7A	Operator Manual - English (para. 4.4.1.1.1)	1		
7B	Operator Manual - Bilingual (para. 4.4.1.1.1)			
8A	Operator Quick Reference Card - English (para. 4.4.1.2.1)	1		
8B	Operator Quick Reference Card - Bilingual (para. 4.4.1.2.1)			
9A	Maintenance and Parts Handbook - English (para. 4.4.1.3.1)	1		
9B	Maintenance and Parts Handbook - Bilingual (para. 4.4.1.3.1)			
10A	Operator Training Package - English (para. 4.4.1.4.1)	1		
10B	Operator Training Package - Bilingual (para. 4.4.1.4.1)			
11A	Preservation, Storage and Reactivation Instructions - English (para. 4.4.1.5.1)	1		
11B	Preservation, Storage and Reactivation Instructions - Bilingual (para. 4.4.1.5.1)			
12	Provisioning Parts Breakdown (para. 4.5.3.1.1)	1		
13	Supplementary Provisioning Technical Documentation (para. 4.5.3.2.1)	1		
14	Material Identification Data Set (para. 4.5.3.3.1)	1		
15	Identification Plates (para. 4.6.1)	LOT		
16	Controlled & Non-Controlled Goods List (para. 4.7.1)	1		
17	Identification Labels for Storage & Shipment and Packaging Codes (para. 4.8.3)	1		
18	List of Items to be Supported (para. 4.9.1)	1		
19A	Training Location:			

19A	Operator Training Session (para. 4.11.2)	CFB Edmonton	1		
19B		CFB Petawawa	1		
19C		CFB Gagetown	2		
19D		CFB Valcartier	1		
20	Equipment Environmental Assessment (para. 5.4.1)		1		
				Subtotal	$ -
Please indicate to which lines items GST/HST is applied, if not to all				**GST/HST**	$ -
				Total	$ -
Note 1:	'LOT' equates to a varied quantity needed to fulfill the requirements of the CDRL.				

Optional Requirements:

Item #	Item Description	Qty	Unit price	Total price
21	MUAS (para. A1.0), **up to 35 additional units**, including Operator, Maintenance and Parts Handbook, and Operator Quick Reference Card	35	$ -	$ -
22	Spare Parts for two (2) years of usage - assume 150 hours of use over the two years, and user maintenance follows the Maintenance Concept para. 4.1, supported by Contractor R&O which should not be costed here.	-	-	$ -

PART-TWO IN-SERVICE SUPPORT FINANCIAL COSTING TABLE

Bidders' Instructions

Note 1	Based on the requirements in Annex B Support SOW and the information provided in the tables below for the various activity scenarios, **Bidders must fill in firm years only, and the other white cells in the tables below.**
Note 2	Bidders must list all labour categories that may be required to completed the work. Other* Labour Categories that are not already listed may be added. The bidder must clearly describe which labour category they are proposing.
Note 3	Work Load % is an estimate and will only be used for costing purposes, these hours do not represent any intended or potential final contract value.
Note 4	Option Years would be negotiated at the time in a future contract.

Table One - Labour Categories - In-Service Support

Bidders must provide labour rates for the labour categories that it considers necessary to complete the work. Those categories not used can be left blank, or if required, additional labour categories can be added.

These rates will be used to calculate prices for the various tasks and activities directed or approved by DND, under the Support SOW, and used as fixed annual values in the Support Contract.

Labour Categories will be grouped into Administrative and Technical, and used in Table Two.

Labour Category	Bid Currency used		Firm Years (Hourly Rate)			Option Years (Hourly Rate) (to be negotiated - Note 4)						
			YEAR 1	YEAR 2	YEAR 3	YEAR 4	YEAR 5	YEAR 6	YEAR 7	YEAR 8	YEAR 9	YEAR 10
Project Manager		Hourly Rate/ Labour Category →										
Administration												
Engineer												
Technician												
Technologist												
Logistician												
Draftsperson/Illustrator												
Other*												
Other*												
Other*												

Table Two - ANNEX B - SUPPORT SOW - 3.0 R&O Activities (Pre-Authorized R&O)

Repair & Overhaul Activities	Details	Labour Category Group Estimated Workload			Firm Years (Workload x Avg. Rate x Percentage)			Option Years (Workload x Avg. Rate x Percentage) (to be negotiated - Note 4)						
		Labour Category Group	Average Hourly Rate	Workload percentage	YEAR 1	YEAR 2	YEAR 3	YEAR 4	YEAR 5	YEAR 6	YEAR 7	YEAR 8	YEAR 9	YEAR 10
R&O hourly work	*In the cell provided, Bidders must indicate what labour categories were used from each labour category group (Administrative and Techincal), as per Table One. **As the bidder is requested to propose their own labour categories as per Table One, only the average hourly rates for Administrative and Technical will be calculated and used for costing purposes. Bidders are requested to provide only one hourly rate per Labour Category Group. Example: If the bidder inputs Project Manager ($10.00/h) and Administration ($20.00/h) under the Labour Gategory Group Administrative, Project Manager plus Administration equals $30.00/h divided in 2, gives an average hourly rate of $15.00/h. For the R&O hourly work described in the Support SOW, the following is the overall estimated workload per year: Year 1 – Estimated Workload to be 200 hours Year 2 – Estimated Workload to be 200 hours Year 3 – Estimated Workload to be 200 hours	**Administrative** (Must Indicate what categories were used - Example - Project Manager, Administration, Other, etc.)		30% of overall hours										
		Technical (Must Indicate what categories were used - Example - Engineer, Technician, Other, etc.)		70% of overall hours										
		Mark-up/Overhead rate			%	%	%	%	%	%	%	%	%	%

		Sub-Total Cost →	$ -	$ -	$ -	$ -	$ -	$ -	$ -	$ -	$ -	$ -

Table Three - R&O Spares Provisioning

Repair & Overhaul Activities	Details		Firm Years (OEM Spares with Mark-up)			Option Years (OEM Spares with Mark-up) (to be negotiated - Note 4)						
			YEAR 1	YEAR 2	YEAR 3	YEAR 4	YEAR 5	YEAR 6	YEAR 7	YEAR 8	YEAR 9	YEAR 10
R&O Spares Provisioning	For R&O spares provisioning described in the Support SOW, the following is the overall estimated OEM spares required per year. Provide the cost of these spares to Canada, specifically including the Contractor's price markup (if any) on the OEM spares. Price of Spares are for evaluation purposes only and does not represent any intended or potential final price of spares. Example: if the Mark up is 5% the sub-total Cost would be Spares x 1.05 = $21,000		$100,000	$100,000	$100,000							
		Mark-Up, Parts Procurement (%)	%	%	%	%	%	%	%	%	%	%
		Sub-Total Cost →	$ -	$ -	$ -	$ -	$ -	$ -	$ -	$ -	$ -	$ -

SUPPORT SOW R&O Activities - Subtotal	$ -	$ -	$ -	$ -	$ -	$ -	$ -	$ -	$ -	$ -	$ -
GST/HST											
Total Annual Value	$ -	$ -	$ -	$ -	$ -	$ -	$ -	$ -	$ -	$ -	$ -
TOTAL FOR ALL FIRM YEARS OF IN-SERVICE SUPPORT (Table 2 +3)	$ -										

ANNEX A

STATEMENT OF WORK

FOR THE

MINI UNMANNED GROUND VEHICLE SYSTEM

TABLE OF CONTENTS

1.0 SCOPE

1.1 Purpose

1.1.1 The purpose of this Statement of Work (SOW) is to define the work requirements for the Mini Unmanned Ground Vehicle System (MUGVS), which will be used by the Canadian Armed Forces field engineer section in the roles of Explosive Ordnance Disposal and Improvised Explosive Device Detect and Defeat.

1.2 Intended Use

1.2.1

1.3 Acronyms and Abbreviations

CA	Contracting Authority
CAF	Canadian Armed Forces
CCS	Control and Communication System
CDRL	Contract Data Requirements List
CETD	Chemical, Explosive, and Toxic Industrial Chemical Detector
CFB	Canadian Forces Base
CFSD	Canadian Forces Supply Depot
CFTO	Canadian Forces Technical Order
CMS	Contract Master Schedule
CNCGL	Controlled & Non-Controlled Goods List
CSR	Contract Status Report
DID	Data Item Description
DMC	Demilitarization Code
DND	Department of National Defence
DPA	Defence Product Act
DSCO	Director Supply Chain Operations
ECL	Export Control List
ECCN	Export Control Classification Number
EEA	Equipment Environmental Assessment
IAW	In Accordance With
ILS	Integrated Logistics Support
ILSM	Integrated Logistics Support Manager
IP	Intellectual Property
IPC	Initial Provisioning Conference
ISO	International Organization for Standardization
ITAR	International Traffic in Arms Regulations

LIS	List of Items to be Supported
MANET	Mobile Ad-hoc Network
MRC	Maximum Repair Cost
MUGV	Mini Unmanned Ground Vehicle
MUGVS	Mini Unmanned Ground Vehicle System
NATO	North Atlantic Treaty Organization
NCAGE	NATO Commercial and Government Entity
NDID	National Defence Index of Documentation
NSN	NATO Stock Number
OEM	Original Equipment Manufacturer
OQRC	Operator Quick Reference Card
PA	Procurement Authority
PPB	Provisioning Parts Breakdown
PSPC	Public Service and Procurement Canada
PTZ	Pan Tilt Zoom
R&O	Repair & Overhaul
RCE	Repair Cost Estimate
SDS	Safety Data Sheet
SOW	Statement of Work
SPTD	Supplementary Provisioning Technical Documentation
STTE	Special Tools and Test Equipment
TA	Technical Authority
TIC	Toxic Industrial Chemical
USML	United States Munitions List

2.0 APPLICABLE DOCUMENTS

2.1 References

2.1.1 Whereas mentioned, the following Standards must be used for the preparation of deliverables to the extent specified in this SOW.

GOVERNMENT FURNISHED INFORMATION

REFERENCE NUMBER	PROMULGATION DATE	REFERENCE TITLE
C-01-100-100/AG-008	2018-08-01	POLICY/MANAGEMENT PROCEDURES AND GUIDELINES SPECIFICATION WRITER'S GUIDE FOR TECHNICAL DOCUMENTATION
C-02-007-000/AG-001	2016-01-01	CONTROLLED TECHNOLOGY ACCESS AND TRANSFER (CTAT) MANUAL
D-01-100-204/SF-000	2018-08-31	PREPARATION OF PREVENTIVE MAINTENANCE INSTRUCTIONS
D-01-100-205/SF-000	2000-10-31	SPECIFICATION – PREPARATION OF CORRECTIVE MAINTENANCE INSTRUCTION
D-01-100-207/SF-002	1996-07-12	SPECIFICATION – PREPARATION OF INTERIM ILLUSTRATED PARTS MANUALS FOR LAND EQUIPMENTS
D-01-100-211/SF-000	1988-12-07	SPECIFICATION – PRESERVATION, STORAGE AND HANDLING INSTRUCTION
D-01-100-214/SF-000	2020-09-30	CANADIAN FORCES SPECIFICATIONS – PREPARATION OF PROVISIONING DOCUMENTATION FOR CANADIAN ARMED FORCES EQUIPMENT
D-01-400-001/SG-000	2021-09-30	STANDARD – ENGINEERING DRAWING PRACTICES
D-01-400-002/SF-000	2018-07-31	CANADIAN FORCES SPECIFICATIONS – LEVELS OF ENGINEERING DRAWINGS
D-02-002-001/SG-001	2021-06-30	CANADIAN FORCES STANDARD – IDENTIFICATION MARKING OF DEPARTMENT OF NATIONAL DEFENCE MATERIEL
D-LM-008-001/SF-001	1986-06-30	METHODS OF PACKAGING
D-LM-008-002/SF-001	1991-08-01	SPECIFICATION FOR MARKING FOR STORAGE AND SHIPMENT
D-LM-008-011/SF-001	1988-11-10	PREPARATION AND USE OF PACKAGING REQUIREMENTS CODES
D-LM-008-036/SF-000	2020-09-30	CANADIAN FORCES SPECIFICATIONS – DEPARTMENT OF NATIONAL DEFENCE MINIMUM REQUIREMENTS FOR COMMERCIAL PACKAGING

COMMERCIALLY AVAILABLE

REFERENCE NUMBER	PROMULGATION DATE	REFERENCE TITLE
AMS-STD-595	LATEST EDITION	COLORS USED IN GOVERNMENT PROCUREMENT
EN 13763-26	2004	EXPLOSIVES FOR CIVIL USES - DETONATORS AND RELAYS - PART 26: DEFINITIONS, METHODS, AND REQUIREMENTS FOR DEVICES AND ACCESSORIES FOR RELIABLE AND SAFE FUNCTION OF DETONATORS AND RELAYS.
MIL-STD-461G	2015	REQUIREMENTS FOR THE CONTROL OF ELECTROMAGNETIC INTERFERENCE CHARACTERISTICS OF SUBSYSTEMS AND EQUIPMENT
NEMA IEC 60529	N/A	DEGREES OF PROTECTION PROVIDED BY ENCLOSURES - IP CODE
R.S.C., 1985, C. H-3	1985	HAZARDOUS PRODUCTS ACT
SOR/2003-289		FEDERAL HALOCARBON REGULATIONS
SOR/2008-273		PCB REGULATIONS
SOR/2012-285		PROHIBITION OF CERTAIN TOXIC SUBSTANCES REGULATIONS
SOR/2014-254		PRODUCTS CONTAINING MERCURY REGULATIONS
SOR/2016-137		OZONE-DEPLETING SUBSTANCES AND HALOCARBON ALTERNATIVES REGULATIONS
SOR/2018-196		PROHIBITION OF ASBESTOS AND PRODUCTS CONTAINING ASBESTOS REGULATIONS
STANAG 2290 ED. 2	18 NOV 2010	NATO UNIQUE IDENTIFICATION OF ITEMS

2.2 Order of Precedence

2.2.1 In the event of conflict between the content in this SOW and the referenced documents, the content of this SOW will take precedence.

3.0 PROJECT MANAGEMENT

3.1 Project Manager

3.1.1 The Contractor must designate a Project Manager with the responsibilities to coordinate, execute, and manage the Contractor's project management activities for the Contract. The Contractor's Project Manager must have the total responsibility for all works required under the Contract.

3.1.2 The Contractor's Project Manager must be the primary point of contact between the Contractor, the DND Technical Authority (TA), and the PSPC Contracting Authority for all issues related to the Contract.

3.2 Contract Master Schedule

3.2.1 The Contractor must provide a Contract Master Schedule (CMS) IAW Contract Data Requirement List (CDRL) MUGVS-PM-001 at Appendix A2.2 (page 32) to ANNEX A and its associated Data Item Deliverable (DID) MUGVS-PM-001 at Appendix A3.3 (page 39) to ANNEX A.

3.2.2 The Contractor must use the approved CMS as the primary schedule for managing the project.

3.2.3 The Contractor may amend the approved CMS, without first obtaining the TA's and Contracting Authority's approval, as long as:

3.2.3.1 Payments under the contract are not affected;

3.2.3.2 The milestones dates are not affected; and

3.2.3.3 The ability of Canada to meet its obligations under the contract is not affected.

3.3 Contract Status Report

3.3.1 The Contractor must provide a Contract Status Report (CSR) IAW CDRL MUGVS-PM-002 at Appendix A2.2 (page 32) to ANNEX A and its associated DID MUGVS-PM-002 at Appendix A3.4 (page 41) to ANNEX A.

3.4 Project Meetings

3.4.1 Meeting Organization and Coordination

3.4.1.1 The Contractor's Project Manager must be present at the Kick-off Meeting, and at other meetings when requested by Canada. If the Project Manager does not have final approval authority for decision making and changes, then the person that has that final approval authority must also be present.

3.4.2 Kick-off Meeting

3.4.2.1 The Contractor must hold and chair a Kick-off Meeting (at the Contractor's facility) no later than 21 calendar days after contract award to review and secure a common understanding of the following:

3.4.2.1.1 The requirements of the Contract;

3.4.2.1.2 The requirements of the SOW;

3.4.2.1.3 General overview of the project, risks, schedule and communication channels to follow, and

3.4.2.1.4 Other contractual and programmatic issues associated with the project as agreed between the TA, CA and the Contractor.

3.4.2.2 Refer to Meeting Documentation requirements found at ANNEX A para. 3.4.5.

3.4.3 Integrated Logistics Support (ILS) Meeting

3.4.3.1 The Contractor must hold and chair an ILS Meeting following the closure of the Kick-Off Meeting (see 3.4.2), in order to:

3.4.3.1.1 Review and secure a common understanding of the requirements expressed in the ILS CDRLs and DIDs, DND Canadian Forces Technical Orders (CFTO)s and specifications; and,

3.4.3.1.2 Discuss possible sparing strategies and concepts, lowest replaceable units, and lines of maintenance.

3.4.3.2 Refer to Meeting Documentation requirements found at ANNEX A para. 3.4.5.

3.4.4 Other meetings

3.4.4.1 The Contractor and the TA may schedule informal reviews, such as teleconferences, video conferences, briefings and technical interchange meetings, to help achieve the requirements of the Contract.

3.4.5 Meeting Documentation

3.4.5.1 The Contractor must prepare and deliver a meeting agenda for all formal meetings and conferences, and prepare and deliver the meeting minutes afterwards.

3.4.5.1.1 The Contractor must provide the Meeting Agenda(s) IAW CDRL MUGVS-PM-003 at Appendix A2.2 (page 32) to ANNEX A and its associated DID MUGVS-PM-003 at Appendix A3.5 (page 42) to ANNEX A.

3.4.5.1.2 The Contractor must record, prepare, and provide the Meeting Minutes of each meeting IAW CDRL MUGVS-PM-004 at Appendix A2.2 (page 32) to ANNEX A and its associated DID MUGVS-PM-004 at Appendix A3.6 (page 43) to ANNEX A.

3.4.5.2 No change in the interpretation of the SOW, Technical Specification, cost, and schedule, as defined in the Contract, may be authorized by the minutes of a meeting. Such changes will require formal contract amendment by the CA.

4.0 INTEGRATED LOGISTICS SUPPORT (ILS)

4.1 Maintenance Concept

4.1.1 The MUGVS will be maintainable by CAF operators and technicians in a field environment as prescribed for each item of equipment:

4.1.1.1 **Operator Maintenance** – consisting of maintenance that will not require Special Tools and Test Equipment (STTE) to complete, as well as equipment cleaning. Task duration generally less than one (1) hour.

4.1.1.2 **Technician Maintenance, First Line** – consisting of preventive and minor corrective maintenance tasks by repair or replacement of parts, and could require STTE to complete this maintenance. Task duration generally less than four (4) hours.

4.1.1.3 **Technician Maintenance, Second Line** – consisting of corrective maintenance requiring additional tools, specialized personnel, STTE, controlled environmental conditions or specific infrastructure requirements. Task duration generally between four (4) and 24 hours.

4.1.2 The more in-depth maintenance tasks, consisting of corrective maintenance tasks, reconditioning of assemblies and component rebuilds, will be done through a possible Support Contract.

4.2 Instruments, Decals, Data Plates and Warnings

4.2.1 The Contractor must deliver all instruments, decals and data plates marked in metric units.

4.2.2 Where international symbols are not possible, the Contractor must provide bilingual markings in English and Canadian French, as per paragraph 4.4.5.

4.2.3 The Contractor must provide warning and precautionary data plates in both official languages of Canada (English and Canadian French) in order to protect personnel and equipment, as per paragraph 4.4.5.

4.3 Access to the Radiofrequency Spectrum

4.3.1 The Contractor must ensure that Radio Frequency equipment, systems, sub-systems, Configuration Items, and end products are certified by Innovation, Science and Economic Development Canada or meet Spectrum Supportability.

4.3.2 For MUGVS Radio Frequency components (transmitting and receiving), the Contractor must provide the Application for Spectrum Supportability IAW CDRL MUGVS-ILS-201 at Appendix A2.2 (page 32) to Annex A, and its associated DID MUGVS-ILS-201 at Appendix A3.7 (page 44) to this ANNEX A.

4.3.2.1 Spectrum Supportability is granted when Radio Frequency equipment is found to be in conformity with National Spectrum Policy and Standards to ensure compatibility with existing Radio Frequency equipment, both military and civilian, currently operating in the same frequency band.

4.3.2.2 DND policy, standards, and organization for spectrum management and instructions for obtaining frequency supportability and licensing can be found in B-GT-D35-001/AG-000 (DNDP 35) Management of the Radio Frequency Spectrum. National Spectrum Policy and Standards can be found on Innovation, Science and Economic Development Canada's website (http://www.ic.gc.ca) at: http://www.ic.gc.ca/eic/site/smt-gst.nsf/eng/h_sf01841.html.

4.4 Technical Publication Package

4.4.1 The Contractor must prepare and deliver the following Technical Publications:

4.4.1.1 Operator Manual

4.4.1.1.1 The Contractor must provide an Operator Manual IAW CDRL MUGVS-ILS-202 at Appendix A2.2 (page 32) and its associated DID MUGVS-ILS-202 at Appendix A3.8 (page 65) to this ANNEX A.

4.4.1.2 Operator Quick Reference Card

4.4.1.2.1 The Contractor must provide an Operator Quick Reference Card IAW CDRL MUGVS-ILS-203 at Appendix A2.2 (page 32) and its associated DID MUGVS-ILS-203 at Appendix A3.9 (page 67) to ANNEX A.

4.4.1.3 Maintenance and Parts Handbook

4.4.1.3.1 The Contractor must provide a Maintenance and Parts Handbook IAW CDRL MUGVS-ILS-204 at Appendix A2.2 (page 32) and its associated DID MUGVS-ILS-204 at Appendix A3.10 (page 69) to ANNEX A.

4.4.1.4 Operator Training Package

4.4.1.4.1 The Contractor must provide an Operator Training Package IAW CDRL MUGVS-ILS-205 at Appendix A2.2 (page 32) and its associated DID MUGVS-ILS-205 at Appendix A3.11 (page 71) to ANNEX A.

4.4.1.5 Preservation, Storage and Reactivation Instructions

4.4.1.5.1 The Contractor must provide a Preservation, Storage and Reactivation Instructions IAW CDRL MUGVS-ILS-206 at Appendix A2.2 (page 32) and its associated DID MUGVS-ILS-206 at Appendix A3.12 (page 73) to ANNEX A.

4.4.2 Front Matter

4.4.2.1 The Contractor must include the following in each Technical Publication (except in the Operator Quick Reference Card):

4.4.2.1.1 A cover page (a template will be provided by the Integrated Logistics Support Manager (ILSM)) showing the date the publication was issued and the model/system designation;

4.4.2.1.2 A List of Effective Pages;

4.4.2.1.3 A Revision Control Table;

4.4.2.1.4 A detailed Table of Contents and List of Figures & Tables; and

4.4.2.1.5 An Acronyms and Abbreviations table

4.4.3 Supplementary Information

4.4.3.1 The Contractor must provide supplementary information, in the portions of text that require it, with one or more of the following notices, in the order listed:

4.4.3.1.1 **Danger.** The danger advisory will be used to draw attention to an extreme, violent and continuous hazard to life;

4.4.3.1.2 **Warning.** The warning advisory will be used to emphasize an operating or maintenance procedure, practice, condition, statement, which if not strictly observed, could result in injury to or death of personnel;

4.4.3.1.3 **Caution.** The caution advisory will be used to emphasize an operating or maintenance procedure, practice, condition, statement, which if not strictly observed, could result in maintenance, damage to or destruction of equipment, loss of mission effectiveness or long-term health hazards to personnel;

4.4.3.1.4 **Note.** The note will be used to point out a procedure, event or practice that it is desirable to highlight; and,

4.4.3.1.5 **Example.** The example will be used when required to clarify the preceding text.

4.4.4 Notice - Intellectual Property Rights

4.4.4.1 **For deliverables that contain only Foreground Information**, the Contractor must include a notice of Intellectual Property Rights in or on each deliverable. The Contractor must record that Canada has licensed Intellectual Property Rights as per Contract No. XXXXX, and must state that the deliverable contains no Background Information, and will identify the Contractor (if applicable) and each applicable grantor to the Contractor of those rights in the Foreground Information.

4.4.4.2 **For deliverables that contain only Background Information**, the Contractor must include a notice of Intellectual Property Rights in or on each deliverable. The Contractor must record that Canada has licensed Intellectual Property Rights as per Contract No. XXXXX, and must state that the deliverable contains only Background Information, and will identify the Contractor (if applicable) and each applicable grantor to the Contractor of those rights in the Background Information.

4.4.4.3 **For deliverables that consist of Background Information and Foreground Information**, the Contractor must include a notice of Intellectual Property Rights in or on each deliverable, such that the Foreground Information and the Background Information may be distinguished from each other. The Contractor must record that Canada has licensed Intellectual Property Rights as per Contract No. XXXXX, and must identify the Contractor (if applicable) and each applicable grantor to the Contractor of those rights in the Background Information and in the Foreground Information.

4.4.5 Official Language Requirements

4.4.5.1 The Contractor must deliver all Technical Publications in English and Canadian French.

4.4.5.2 The Contractor must have all Technical Publications translated by certified translators, such as members of an authorized provincial association of translators, to ensure the quality of translated text.

4.4.5.3 In bilingual publications, the Contractor must use the same images within the French and English versions, except for any software-based images (such as screenshots) if that software's language can be selected between English and French. In such a case, the Contractor must use the software-based images in the language of the text they supplement.

4.4.5.4 The Contractor must ensure all translations are consistent with approved DND terminology. Approved terminology sources, in order of priority, are as follows:

4.4.5.4.1 Canadian Oxford Dictionary Second Edition (for English);

4.4.5.4.2 Le Petit Robert Edition 2017 (for French); and

4.4.5.4.3 Termium, PSPC Translation Bureau Linguistic Data Bank (http://www.termiumplus.gc.ca/);

4.4.5.4.4 International Electrotechnical Vocabulary (www.electropedia.org)

4.4.5.5 The Contractor must prepare and provide, for approval by the ILSM, a completed DND2515 "Certificate Of Translation Accuracy Check" form for each second-language publication produced under para 4.4.1.

4.4.5.6 The Contractor must review and accept responsibility for the validity of all (both their own and all sub-Contractors') information found in the Technical Publications.

4.5 Provisioning Documentation

4.5.1 The Provisioning Documentation (PD) lists and describes in detail the parts that make up the MUGVS as well as all specialized and specific items required to support the use and maintenance of the MUGVS. The PD allows the MUGVS's Integrated Logistics Support Manager (ILSM) to plan and implement a sparing and support strategy.

4.5.2 Included in the PD are all the procurable parts — either from the Contractor or a third-party — of the MUGVS to the lowest replaceable unit. Also considered procurable parts are the consumables required to operate and maintain the MUGVS (chemicals, specific lubricants, etc.) and specialized equipment (special tools, training aids, transport containers, etc.) specific to the MUGVS.

4.5.3 The Contractor must prepare and deliver the following Provisioning Documentation:

4.5.3.1 Provisioning Parts Breakdown

4.5.3.1.1 The Contractor must provide a Provisioning Parts Breakdown IAW CDRL MUGVS-ILS-207 at Appendix A2.2 (page 32) and its associated DID MUGVS-ILS-207 at Appendix A3.13 (page 75) to this ANNEX A.

4.5.3.2 Supplementary Provisioning Technical Documentation

4.5.3.2.1 The Contractor must provide Supplementary Provisioning Technical Documentation IAW CDRL MUGVS-ILS-208 at Appendix A2.2 (page 32) and its associated DID MUGVS-ILS-208 at Appendix A3.14 (page 77) to this ANNEX A.

4.5.3.3 Materiel Identification Data Set

4.5.3.3.1 The Contractor must provide a Materiel Identification Data Set (MIDS) IAW CDRL MUGVS-ILS-209 at Appendix A2.2 (page 32) to Annex A, and its associated DID MUGVS-ILS-209 at Appendix A3.15 (page 78) to this ANNEX A.

4.5.4 The Contractor must review and accept responsibility for the validity of all (both their own and all sub-Contractors') information found in the Provisioning Documentation.

4.6 Initial Provisioning Conference

4.6.1 The Contractor must hold and chair an Initial Provisioning Conference (IPC). The IPC will occur after the Contractor has delivered Provisioning Documentation (PD) suitable for a successful IPC as determined by the DND ILS Manager.

4.6.2 The purpose of an IPC is to allow DND to verify that the Provisioning Documentation reflects the current and complete configuration of the equipment being procured by comparing it against the Maintenance and Parts Handbook and Supplementary Provisioning Technical Documentation. It is also used to select the range of spares required to support the system during an initial period of service of two (2) years. For this purpose, the Contractor must provide:

4.6.2.1 A suitable conference facility with projector(s), and three (3) unrestricted, hard-wired, broadband Internet access points through Ethernet (RJ45) connections;

4.6.2.2 Engineering and product support assistance;

4.6.2.3 The equipment for physical examination;

4.6.2.4 Engineering, reliability and maintainability data; and

4.6.2.5 Modification data, if applicable.

4.6.3 Refer to Meeting Documentation requirements found at ANNEX A para. 3.4.5.

4.7 Identification Plates

4.7.1 The Contractor must provide Identification Plates – Design Template & Populated Designs IAW CDRL MUGVS-ILS-210 at Appendix A2.2 (page 32) and its associated DID MUGVS-ILS-210 at Appendix A3.16 (page 79) to this ANNEX A.

4.7.2 The Contractor must attach Identification Plates to the following components for ease of tracking within the Canadian Forces Supply System:

4.7.2.1 Prime Equipment;

4.7.2.2 Spares;

4.7.2.3 STTE;

4.7.2.4 Training Equipment;

4.7.2.5 Transportation, Shipping, Storage Containers that are not single-use;

4.7.2.6 Support Equipment (excluding common tools), and

4.7.2.7 Automatic Test Equipment.

4.7.3 Unique Identification (UID) is the allocation of a unique number to an individual item using a standard procedure which is globally accepted. UID makes it possible to store and exchange data on an item's usage and maintenance history using national and international systems. UID can be used in the logistics chain to track and trace materiel more effectively. Implementing UID-marking will lead to the optimization of the logistical footprint.

4.7.4 The Contractor must generate and affix Unique Item Identifier(s), in accordance with STANAG 2290 Edition 2 - NATO UNIQUE IDENTIFICATION OF ITEMS, on the Identification Plates of the following serially managed items, and be of such quality as to remain machine readable for the expected life of the item:

4.7.4.1 Mini Unmanned Ground Vehicle (see A1.1.1.2.1)

4.7.4.2 Control and Communication System (see A1.1.1.2.2)

4.7.4.3 All components that require calibration; and

4.7.4.4 All components that may require software or firmware updates.

4.8 Controlled & Non-Controlled Goods List

4.8.1 The Contractor must provide the Controlled & Non-Controlled Goods List with the Demilitarization Code (DMC) IAW MUGVS-ILS-211 at Appendix A2.2 (page 32) and its associated DID MUGVS-ILS-211 at Appendix A3.17 (page 81) to this ANNEX A.

4.9 Identification Labels for Storage & Shipment and Packaging Codes

4.9.1 The Contractor must supply all parts and equipment, packaged and packed as per D-LM-008-001/SF-001 following:

4.9.1.1 Level B Limited Military Package;

4.9.1.2 Level B Limited Military Pack;

4.9.2 The Contractor must label all packaging, produced under 4.9.1 above, as per D-LM-008-002/SF-001, using D-LM-008-011/SF-001 to prepare the required codes for packaging and preservation.

4.9.3 The Contractor must provide Identification Labels for Storage & Shipment and Packaging Codes IAW CDRL MUGVS-ILS-212 at Appendix A2.2 (page 32) to Annex A, and its associated DID MUGVS-ILS-212 at Appendix A3.18 (page 83) to this ANNEX A.

4.9.4 For serially managed items, the Contractor must apply the Unique Item Identifier(s), in a machine readable form, to the outside of any package of uniquely identified materiel where the UID data matrix is not easily machine-readable through the packaging material.

4.9.4.1 The Unique Item Identifier and its component data elements are to be replicated in a PDF 417 barcode in accordance with STANAG 2290 (Edition 2).

4.10 List of Items to be Supported (for Support SOW)

4.10.1 The Contractor must provide a List of Items to be Supported IAW CDRL MUGVS-ILS-213 at Appendix A2.2 (page 32) to Annex A, and its associated DID MUGVS-ILS-213 at Appendix A3.19 (page 85) to this ANNEX A.

4.11 Training Session

4.11.1 The Contractor must provide Training Session(s) after delivery of the first MUGVS.

4.11.1.1 Scheduling of the Training Session(s) will be done after contract award, and jointly planned between the DND and the Contractor.

4.11.2 The Contractor must provide Training Session(s) consisting of:

4.11.2.1 Seven Operator Training Sessions (train-the-trainer type) for one (1) to twenty (20) students per course, with a course length of one (1) day.

4.11.3 The Contractor must provide the Training Session(s) in English. The instructor(s) must be bilingual or have assistance from a bilingual Subject Matter Expert in order to understand and answer questions from students in both official languages; English and Canadian French.

4.11.4 The Contractor must provide Instructor(s) that are Subject Matter Experts on the MUGVS equipment being provided.

4.11.5 The Contractor must use the approved and accepted **Operator Training Package** for the Training Session(s), and course lessons must follow the content found within the training package.

4.11.6 The Contractor must provide the course material listed within the **Operator Training Package** CDRL as being 'Issued to Students at Training Session(s)', and all course material and handouts must be provided in English and Canadian French.

4.11.7 The Contractor must use the MUGVS(s) and additional training material identified in the **Operator Training Package Instructor Lesson Plan**, for the Training Session.

4.11.7.1 The Contractor must provide the additional training material that is listed in the **Operator Training Package Instructor Lesson Plan** as 'supplied by the Contractor'.

4.11.7.2 The Contractor must set-up the MUGVS(s) and additional training material that is listed in the **Operator Training Package Instructor Lesson Plan** as 'supplied by the Contractor', for the Training Session.

5.0 ENVIRONMENTAL MANAGEMENT AND ASSESSMENT

5.1 General

5.1.1 In accordance with the Prohibition of Certain Toxic Substances Regulations (SOR/2012-285), the Contractor must not incorporate the substances listed under this regulation in any part of the equipment.

5.1.2 In accordance with the Prohibition of Asbestos and Products containing Asbestos Regulations (SOR/2018-196), the Contractor must offer asbestos-free equipment.

5.1.3 In accordance with the Federal Halocarbon Regulations (SOR/2003-289) and the Ozone-depleting Substances and Halocarbon Alternatives Regulations (SOR/2016-137), for any halocarbons that are incorporated into the equipment, the Contractor must comply with regulations SOR/2003-289 and SOR/2016-137. If such substances must be used, the Contractor must:

5.1.3.1 Inform the Technical Authority by identifying the substance(s).

5.1.3.2 Identify the specific location within the equipment and the quantity.

5.1.4 In accordance with the Products Containing Mercury Regulations (SOR/2014-254), if mercury is present in any part of the equipment, the Contractor must comply with the mercury content limit in regulation SOR/2014-254. If such substances must be used, the Contractor must:

5.1.4.1 Inform the Technical Authority by identifying the substance(s).

5.1.4.2 Identify the specific location within the equipment and the quantity.

5.1.5 In accordance with the Polychlorinated Biphenyls (PCBs) Regulations (SOR/2008-273), if PCBs are present in any part of the equipment, the Contractor must comply with the regulation, the Contractor must:

5.1.5.1 Inform the Technical Authority by identifying the substance(s).

5.1.5.2 Identify the specific location within the equipment and the quantity.

5.1.5.3 Certify that there is no technically or economically feasible PCB-free alternative.

5.2 Environmental Management System

5.2.1 The Contractor must implement and maintain an Environmental Management System which is consistent with the principles presented in ISO 14001. Certification to this standard is preferred but not mandatory.

5.2.2 The Contractor must have a formalized set of procedures and control measures in place to demonstrate environmental compliance and minimize environmental impact of the work.

5.2.3 Prior to the commencement of work, the Contractor must have in place an Emergency / Spill Response Plan and also processes and procedures for the identification, management, handling and disposal of all substances, pollutants and material covered by

the applicable municipal, territorial, provincial, federal environmental protection statutes and regulations.

5.2.4 The Contractor must update the Equipment Environmental Assessment (EEA), after it is delivered, under the following circumstances:

5.2.4.1 There are changes related to the items identified on the Hazardous Substances & Chemical Products table; or

5.2.4.2 New items/components are introduced as a result of configuration changes or modifications that contain hazardous substances and chemical products identified in the EEA.

5.3 Environmental Packaging Labels

5.3.1 The Contractor must label and ship goods falling within the Hazardous Products Act, R.S.C. 1985, C. H-3 and regulation(s) there under, in accordance with the said Act and regulation(s).

5.3.1.1 The Contractor must clearly identify the contents of the hazardous material with labels, and the Safety Data Sheet must explain what those hazards are.

5.4 Equipment Environmental Assessment

5.4.1 The Contractor must prepare and submit an EEA IAW CDRL MUGVS-ILS-214 at Appendix A2.2 (page 32) to Annex A, and its associated DID MUGVS-ILS-214 at Appendix A3.20 (page 88) to this ANNEX A.

5.4.2 The Contractor may provide Commercial in Confidence information in a separate document.

6.0 TECHNICAL REQUIREMENTS

6.1 Overview

6.1.1 The Contractor must comply with all specified requirements of the MUGVS, stated in:

6.1.1.1 A1.0 APPENDIX: MUGVS TECHNICAL SPECIFICATION

A1.0 APPENDIX: MUGVS TECHNICAL SPECIFICATION

A1.1 System Requirements

A1.1.1 General

A1.1.1.1 The Mini Unmanned Ground Vehicle System (MUGVS) must be based on proven, fielded equipment that is in-service with a North Atlantic Treaty Organization (NATO) or American, British, Canadian, Australian, New Zealand military partner or police agency of those countries.

A1.1.1.2 The MUGVS must consist of the following components, and is further described in detail under the **System Component Requirements** section:

A1.1.1.2.1 One (1) Mini Unmanned Ground Vehicle (MUGV);

A1.1.1.2.2 One (1) Control and Communication System (CCS);

A1.1.1.2.3 Battery Set(s) for six (6) hours of operation;

A1.1.1.2.4 One (1) Battery Charging System;

A1.1.1.2.5 One (1) Drop Charge Release Mechanism;

A1.1.1.2.6 One (1) ABL-2000L Disruptor Adaptor;

A1.1.1.2.7 One (1) Needle Plus Disruptor Adaptor;

A1.1.1.2.8 One (1) Chemical, Explosive, and Toxic Industrial Chemical Detector (CETD);

A1.1.1.2.9 One (1) Mapping Camera/Sensor;

A1.1.1.2.10 One (1) Pan Tilt Zoom (PTZ) Camera, and

A1.1.1.2.11 One (1) Hard Transport Container for the above components.

A1.1.1.3 The MUGVS must include (stored within the Hard Transport Container) all tools required to setup and maintain the MUGVS in accordance with the **Operator Maintenance** Concept ANNEX A paragraph 4.1.1.1 (page 10).

A1.1.1.4 The MUGVS must include (stored within the Hard Transport Container without needing to be folded or otherwise distorted from flat) the Technical Publication(s) listed within the CDRL(s) as being ‘Issued with each MUGVS’.

A1.1.2 Transportability

A1.1.2.1 The MUGVS must be transportable by fixed and rotary wing aircraft, cargo ships, rail, and commercial and military wheeled vehicles on highways and cross-country.

A1.2 System Component Requirements

A1.2.1 MUGV

A1.2.1.1 Mobility

A1.2.1.1.1 The MUGV must maintain an average velocity of no less than five (5) km/h on level pavement or concrete surface.

A1.2.1.1.2 The MUGV must traverse smooth polished surfaces, hard road surfaces, mud, fine sand, snow and ice.

A1.2.1.1.3 The MUGV must climb and descend from obstacles (such as a road curb) of no less than a 10 cm height while carrying the minimum payload weight of 2kg.

A1.2.1.1.4 The MUGV must traverse a dry grass-covered slope of no less than 15 degrees (27% grade) while carrying the minimum payload weight of 2kg.

A1.2.1.1.5 The MUGV must climb and descend dry grass-covered slopes of no less than 30 degrees (58% grade) while carrying the minimum payload of 2kg.

A1.2.1.1.6 The MUGV must hold position when not commanded to move, including when the MUGV is stopped on uneven ground or slopes and while carrying the minimum payload weight of 2kg.

A1.2.1.2 Firing Circuit

A1.2.1.2.1 The MUGV must have no less than one (1) Firing Circuit that can initiate each of the following:

A1.2.1.2.1.1 M6 Electric Detonator;

A1.2.1.2.1.2 ABL-2000L Disruptor, and

A1.2.1.2.1.3 Needle Plus disruptor.

A1.2.1.2.2 The MUGV must have a built-in two (2) step action, to initiate the Firing Circuit. The first action is to arm the system, and the second action is the pressing of the fire button.

A1.2.1.2.3 The power must not be applied to the Firing Circuit prior to the activation of the first action (arm) in the two-step action (arm+fire).

A1.2.1.2.4 If the MUGV loses contact with the CCS, the MUGV must have a failsafe that removes power from the Firing Circuit (goes to a safe state) in no more than 60 seconds following the contact loss.

A1.2.1.2.5 The MUGV must have a feature to conduct continuity checks of the entire Firing Circuit (following the safety limits of EN 13763-26 2004 para 7.4.1), initiated from the CCS, when one of the items listed at para. A1.2.1.2.1 are connected to the Firing Circuit.

A1.2.1.2.6 The MUGV Firing Circuit must be protected (isolated) from an inadvertent activation when power is cycled to the MUGV.

A1.2.1.2.7 Electro-Magnetic Compatibility and Interference

A1.2.1.2.7.1 The MUGV must meet the requirements of RE102 IAW MIL-STD-461G, or other equivalent international standard.

A1.2.1.2.7.2 The MUGV must meet the requirements of RS103 IAW MIL-STD-461G, or other equivalent international standard, for Army Ground levels from 2 MHz to 18 GHz.

A1.2.1.3 Cameras

A1.2.1.3.1 The MUGV Cameras must have the following features:

A1.2.1.3.1.1 Colour image;

A1.2.1.3.1.2 Low light and near infra-red illuminators;

A1.2.1.3.1.3 640x480 pixels or higher resolution;

A1.2.1.4 Field of View

A1.2.1.4.1 The MUGV must have an overall front field of view with the following:

A1.2.1.4.1.1 No less than a 60 degree horizontal field of view, and

A1.2.1.4.1.2 No less than a 120 degree vertical field of view;

A1.2.1.4.1.2.1 If required, the vertical field of view range can be met by either the camera tilting, the MUGV body tilting, or through a software based tilt.

A1.2.1.4.2 The MUGV must have an overall rear field of view with the following:

A1.2.1.4.2.1 No less than a 60 degree horizontal field of view;

A1.2.1.4.2.2 No less than a 60 degree vertical field of view;

A1.2.1.4.2.2.1 If required, the vertical field of view range can be met by either the camera tilting, the MUGV body tilting, or through a software based tilt.

A1.2.1.5 Radio

A1.2.1.5.1 The MUGV must continually act as a mobile RF communication relay, in a Mobile Ad-hoc Network (MANET), to assist with communication connection with any other device in the MANET using an MPU5 or Embedded Modules Wave Relay radio system (from Persistent Systems) with the same programing in a non-line-of-sight, subterranean, or reinforced concrete buildings, or to extend the range in line-of-sight applications.

A1.2.1.5.2 The MUGV must use the MPU5 (NSN 5975-01-658-9155) or Embedded Module Wave Relay radio system with S-Band module NSN 5998-01-658-8999 (2200-2507 MHz) and L-Band module NSN 5895-01-662-2670 (1350-1390 MHz) to be interoperable with the current Canadian system.

A1.2.1.5.3 The MUGV radio must be programmable to use an IP scheme imposed by DND to be interoperable with the current Canadian system.

A1.2.1.5.4 The MUGV must have an Ethernet connection meeting IEEE Std. 802.3-2022 to set up the radio in a MANET.

A1.2.1.6 Durability and Cleaning

A1.2.1.6.1 The MUGV must survive no less than five (5) consecutive throws with all possible landing angles from a height of no less than four (4) meters onto hard concrete, and remain fully functional.

A1.2.1.6.2 The MUGV must have no less than an IP65 rating, or equivalent, IAW NEMA IEC 60529.

A1.2.1.6.3 The MUGV must allow cleaning of the exterior surfaces with hot and cold low pressure water, steam and detergents, without wear, deterioration or damage.

A1.2.2 **CCS**

A1.2.2.1 Display

A1.2.2.1.1 The CCS screen size must be no less than 254mm on the diagonal.

A1.2.2.1.2 The CCS must have an image display with a HD resolution of no less than 640x480 pixels.

A1.2.2.1.3 The CCS must have an image display whose brightness is user adjustable for daylight (no less than 1000 nits) and low light viewing.

A1.2.2.2 The CCS must add and remove a second simultaneous video feed from another camera to gain a better situational awareness of the operation.

A1.2.2.3 The CCS must record and store internally no less than 20 hours of videos and 1000 images concurrently.

A1.2.2.4 The CCS recorded data must be exportable to a portable computer using a USB port or SD card port.

A1.2.2.5 Durability

A1.2.2.5.1 The CCS must have no less than an IP64 rating, or equivalent, IAW NEMA IEC 60529.

A1.2.2.6 Radio

A1.2.2.6.1 The CCS must continually act as a mobile RF communication relay, in a MANET, to assist with communication connection with any other device in

the MANET using an MPU5 or Embedded Modules Wave Relay radio system (from Persistent Systems) with the same programing in a non-line-of-sight, subterranean, or reinforced concrete buildings, or to extend the range in line-of-sight applications.

A1.2.2.6.2 The CCS must use the MPU5 (NSN 5975-01-658-9155) or Embedded Module Wave Relay radio system with S-Band module NSN 5998-01-658-8999 (2200-2507 MHz) and L-Band module NSN 5895-01-662-2670 (1350-1390 MHz) to be interoperable with the current Canadian system.

A1.2.2.6.3 The CCS must have user access to the Web Management Interface to setup the MPU5 or Embedded Module or alternatively permit the changing of all radio parameters through the CCS interface including:

A1.2.2.6.3.1 Frequency;

A1.2.2.6.3.2 Bandwidth;

A1.2.2.6.3.3 IP Scheme;

A1.2.2.6.3.4 Network Node List; and

A1.2.2.6.3.5 Encryption Key.

A1.2.2.6.4 The CCS must have a network visualization graphic showing the active nodes local to the MUGV with associated Signal to Noise Ratio (SNR) between the CCS and MUGV.

A1.2.2.6.5 The CCS must have a noise visualization graphic showing the signal strength between the nodes.

A1.2.2.6.6 The CCS Radio must be programmable to use an IP scheme imposed by DND to be interoperable with the current Canadian system.

A1.2.3 **Battery Sets**

A1.2.3.1 The MUGVS Battery Set(s) (MUGV, CCS, CETD, etc.) must provide no less than one (1) hour of operation at an approximate ideal temperature of 20ºC (+/- 3 ºC). Operation is defined as:

A1.2.3.1.1 Power-on and initialization sequence of the MUGV and CCS;

A1.2.3.1.2 Movement of the MUGV ‘down range’ for 100m, with periodic movements throughout the majority of the one (1) hour, and then returning back for 100m before the one (1) hour has expired, and

A1.2.3.1.3 Continuous video transmission (small fluctuations allowed) between the MUGV and CCS throughout the one (1) hour.

A1.2.3.2 The MUGVS must have Battery Set(s) for six (6) hours of operation.

A1.2.3.2.1 If using multiple Battery Sets, the MUGVS Battery Sets must be replaced in no more than five (5) minutes.

A1.2.3.3 The MUGVS Battery Set(s) must be rechargeable when installed in the MUGV and CCS.

A1.2.4 **Battery Charging System**

A1.2.4.1 The Battery Charging System must include a universal power input of 110VAC – 220VAC, 50Hz – 60Hz, with a North American plug type.

A1.2.4.2 If using multiple Battery Sets, the Battery Charging System must be standalone from the MUGV and CCS, so they can be used while battery(ies) are charging.

A1.2.4.3 The Battery Charging System must provide visual indications of battery charging in order to indicate when charging is in progress and when it is complete.

A1.2.4.4 The Battery Charging System full recharge time for one (1) Battery Set (both MUGV and CCS) must not exceed eight (8) hours.

A1.2.4.5 The Battery Charging System must be certified CSA, CE, UL or equivalent.

A1.2.4.6 The Battery Charging System must recharge all batteries sets at the same time.

A1.2.5 **Drop Charge Release Mechanism**

A1.2.5.1 The Drop Charge Release Mechanism must support and hold a drop charge of no less than 1.60kg (approx. 3.53lbs), while climbing and descending from obstacles (such as road curb) of no less than 10 cm (approx. 4 inches)

A1.2.5.2 The Drop Charge Release Mechanism must carry and actuate the physical release of a drop charge (defined as two taped blocks of C4 explosive and Remote Firing Device Receiver), being at least 1.60kg (approx. 3.53lbs) in weight and a maximum of 6cm width x 6cm height x 30cm length (approx. 2.36 x 2.36 x 11.80 inches).

A1.2.5.3 The Drop Charge Release Mechanism must be controllable through the CCS.

A1.2.6 **ABL-2000L Disruptor Adaptor**

A1.2.6.1 The ABL-2000L Disruptor Adaptor must be adjustable thru the CCS to an angle of no less than 45 degrees upward and downward from the horizontal position.

A1.2.6.2 The MUGVS must fire the ABL-2000L Disruptor at all angles without damaging parts of the MUGV.

A1.2.7 **Needle Plus Disruptor Adaptor**

A1.2.7.1 The Needle Plus Disruptor Adaptor must be adjustable thru the CCS to an angle of no less than 45 degrees upward and downward from the horizontal position.

A1.2.7.2 The MUGVS must fire the Needle Plus Disruptor at all angles without damaging parts of the MUGV.

A1.2.8 **CETD**

A1.2.8.1 The CETD must detect chemical agents and Toxic Industrial Chemical (TICs) and Explosive.

A1.2.8.2 The CETD must detect and classify chemical agents, TICs and explosive according to standard abbreviations (e.g. GB, HD, TIC, RDX, Ammonium Nitrate...).

A1.2.8.3 The CETD must detect vapor from chemicals and explosives without touching the substance.

A1.2.8.4 The CETD detection and classification times for chemical agents, TICs and explosive must be no more than 30 seconds.

A1.2.8.5 The CETD must clearly indicate current relative level(s) of concentration.

A1.2.8.6 The CETD must indicate the chemical agent or TIC with the greatest toxicity when detecting multiple chemical hazards.

A1.2.8.7 The CETD must detect nerve agent GA (Tabun, Chemical Abstracts Service Registry Number (CAS RN 77-81-6) at 0.26 mg/m^3.

A1.2.8.8 The CETD must detect nerve agent GB (Sarin, CAS RN 107-44-8) at 0.13 mg/m^3.

A1.2.8.9 The CETD must detect nerve agent GD (Soman, CAS RN 96-64-0) at 0.13 mg/m^3.

A1.2.8.10 The CETD must detect nerve agent GF (Cyclo-sarin, CAS RN 329-99-7) at 0.13 mg/m^3.

A1.2.8.11 The CETD must detect nerve agent VX (CAS RN 507-8269-9) at 0.05 mg/m^3.

A1.2.8.12 The CETD must detect HD (Distilled Mustard, CAS RN 505-60-2) at 2.1 mg/m^3.

A1.2.8.13 The CETD must detect L (Lewisite, CAS RN 541-25-3) at 3.9 mg/m^3.

A1.2.8.14 The CETD must detect AC (Hydrogen Cyanide, CAS RN 74-90-8) at 27 mg/m^3.

A1.2.8.15 The CETD must detect blood agent CK (Cyanogen Chloride, CAS RN 506-77-4) at 20 mg/m^3.

A1.2.8.16 The CETD must detect choking agent CG (Phosgene, CAS RN 75-44-5) at 50 mg/m^3.

A1.2.8.17 The CETD must detect HL (Mustard-Lewisite mixture) at 3.0 mg/m^3.

A1.2.8.18 The CETD must detect blister agent HN-3 (Nitrogen Mustard, CAS RN 555-77-1) at 10 mg/m^3.

A1.2.8.19 The CETD must detect NH_3 (Ammonia, CAS RN 7664-41-7) at 111 mg/m^3.

A1.2.8.20 The CETD must detect H_2S (Hydrogen Sulfide, CAS RN 7783-06-4) at 37.6 mg/m^3.

A1.2.8.21 The CETD must detect HCl (Hydrogen Chloride, CAS RN 7647-01-0) at 32.8 mg/m^3.

A1.2.8.22 The CETD must detect Cl_2 (Chlorine, CAS RN 7782-50-5) at 6.0 mg/m^3.

A1.2.8.23 The CETD must detect SO_2 (Sulphur Dioxide, CAS RN 7446-09-5) at 4.0 mg/m^3.

A1.2.8.24 The CETD must detect and identify the following explosive:

A1.2.8.24.1 RDX;

A1.2.8.24.2 PETN;

A1.2.8.24.3 TNT;

A1.2.8.24.4 Semtex;

A1.2.8.24.5 Nitroglycerine;

A1.2.8.24.6 DNT;

A1.2.8.24.7 Amatol;

A1.2.8.24.8 Composition B;

A1.2.8.24.9 HBX;

A1.2.8.24.10 Octol;

A1.2.8.24.11 Picric Acid;

A1.2.8.24.12 Tetryl;

A1.2.8.24.13 Nitro Cellulose;

A1.2.8.24.14 Smokeless Powder;

A1.2.8.24.15 HME with Nitrate Base;

A1.2.8.24.16 Black Powder;

A1.2.8.24.17 HME with Chlorate Base;

A1.2.8.24.18 Bromates;

A1.2.8.24.19 HME with Potassium Base;

A1.2.8.24.20 TATP; and

A1.2.8.24.21 HME with Peroxide base.

A1.2.9 **Mapping Camera / Sensor**

A1.2.9.1 The MUGVS must have a mapping payload that can scan, and through software, reproduce a 2D image of building interior, displaying this on the CCS.

A1.2.9.2 The 2D image produced by the Mapping Camera/Sensor on the CCS must be exportable to a computer thru a USB port or SD card port.

A1.2.10 **PTZ Camera**

A1.2.10.1 The PTZ Camera must have no less than the following features:

A1.2.10.1.1 Colour image;

A1.2.10.1.2 Low light and near infra-red illuminators;

A1.2.10.1.3 40X zoom;

A1.2.10.1.4 640x480 pixels or higher resolution.

A1.2.10.1.5 No less than a 60 degree vertical field of view ;

A1.2.10.1.6 Pan no less than from -180 to +180 degrees (left and right);

A1.2.10.1.7 Tilt no less than +90 to -90 degrees (up and down).

A1.2.11 **Hard Transport Container**

A1.2.11.1 The Hard Transport Container must have no less than an IP66 rating, or equivalent, IAW NEMA IEC 60529.

A1.3 Physical Requirements

A1.3.1 **Size**

A1.3.1.1 The MUGV and CCS, with one (1) set of batteries each, must fit within the Soldier's Tactical Field Pack (NSN: 8465-20-000-2774).

A1.3.1.1.1 The Soldier's Tactical Field Pack (NSN: 8465-20-000-2774) has an available volume of: Height – 51 cm (20 in.), Width – 30.5cm (12 in.), and Depth – 20 cm (8 in.)

A1.3.2 **Weight**

A1.3.2.1 The MUGV and CCS (without the MPU5 radio), with one (1) set of batteries each, must not exceed 10kg in combined weight.

A1.3.3 **Colour**

A1.3.3.1 The MUGV must have the predominant exterior colour (so that it contributes to and does not compromise an operator's camouflage) of:

A1.3.3.1.1 Flat/matte finish green;

A1.3.3.1.2 Flat/matte finish earth tone;

A1.3.3.1.3 Flat/matte finish grey, or

A1.3.3.1.4 Flat/matte finish black.

A1.4 Environmental/Climatic Requirements

A1.4.1 Climatic Conditions

A1.4.1.1 The MUGVS must operate in temperatures from –20ºC to +39ºC with no reduction in performance and durability.

A1.4.1.2 The MUGVS, without the batteries, must be stored in temperatures from –50ºC to +50ºC with no reduction in performance and durability.

A1.4.1.3 The MUGVS must operate in relative humidity from 5% to 100%.

A1.4.2 Atmospheric Conditions

A1.4.2.1 The MUGV must operate in blowing sand and dust caused by wind gusts up to 40 km/h over a period of no less than one (1) hour.

A2.0 APPENDIX: CONTRACT DATA REQUIREMENTS LIST

A2.1 Management and Explanation of the CDRL

A2.1.1 Management of Data Items

A2.1.1.1 The Contractor must review, update and deliver amendments, or confirm the continuing accuracy of data items annotated with a maintenance period, in accordance with the CDRL.

A2.1.1.2 The Contractor must deliver amended, reissued or resubmitted data items to the location(s) and in the format and quantities specified in the CDRL for the initial submission of the data items.

A2.1.2 Explanation of the CDRL

A2.1.2.1 **CDRL Line Number** – This field provides the unique sequential number that identifies each data item within different functional groups (eg, PM-001, SE-101, & ILS-201).

A2.1.2.2 **CDRL Title** – This field identifies the title of the data item.

A2.1.2.3 **SOW Para Ref** – This field shows the paragraph in the SOW where the data item is stipulated. There may be multiple references to the data item in the SOW, but generally only the first (or one) reference is shown in the CDRL.

A2.1.2.4 **Version** – This field identifies the particular delivery of a data item during its lifecycle (ie, draft, final).

A2.1.2.5 **Delivery Schedule** – This field specifies the date(s) and/or events by which the data item is required to be delivered. The date of delivery applies to all delivery locations and quantities unless otherwise specified. Following are some of the abbreviations and symbols used with this column:

A2.1.2.5.1 ‘KO’ means the Kick-Off Meeting date;

A2.1.2.5.2 Numerals indicate the number of Calendar Days, unless specified otherwise;

A2.1.2.5.3 ‘+’ means after the specified date or event; and

A2.1.2.5.4 ‘-‘ means before the specified date or event.

A2.1.2.5.5 If a data item is required to be delivered before an event having a duration of greater than one day, delivery date must be calculated from the first day of that event. If a data item is required to be delivered after an event having a duration of greater than one day, the delivery date must be calculated from the last day of that event.

A2.1.2.6 **Quantity** – This field specifies the total number of data items to be delivered to the associated delivery location(s), including the number of hard (H) and soft (S) copies. When both hard and soft copies are requested, the action copy will be indicated in the notes column.

A2.1.2.7 **Addressee** – This field shows the short title of the DND representative to whom the hard and soft copies of the data items must be delivered. The action hard copy of the data item must be delivered to the first nominated location in this field.

A2.1.2.8 **Data Item Description Reference** – This field provides the identification of the DID with which the data item must comply.

A2.1.2.9 **DND Action Period** – This field defines the number of Calendar Days available to the DND to action the data item and respond to the Contractor, if that action requires a response.

A2.1.2.9.1 The period begins upon the date the action copy of the data item is received at the first nominated addressee.

A2.1.2.9.2 The action period applies to all deliveries, including first deliveries, amendments and re-issues. If a data item is delivered earlier than the first delivery date shown in the CDRL, the DND is not obliged to action it until after that date. If the action period states 'by MSR' for a data item delivered prior to a Mandated System Review (MSR), the action period ends when the minutes for that MSR are approved.

A2.1.2.10 **DND Action Required** – This field indicates the purpose for which the data item is being submitted to the DND, which will either be for Review, Approval or Acceptance.

A2.1.2.11 **Maintenance** – This field specifies either the timings or the time intervals, after each delivery, at which the data item must be reviewed by the Contractor and either have its continuing accuracy status confirmed in writing, or be updated and reissued. The Maintenance column does not apply to draft or preliminary versions of data items. The following abbreviations and codes are applicable to this column:

A2.1.2.11.1 xM – every x calendar months;

A2.1.2.11.2 R – to enable it to be considered at each MSR set out in the System Engineering program;

A2.1.2.11.3 SA – to enable it to be provided for the purposes of conducting Acceptance of each System;

A2.1.2.11.4 FA – to enable it to be provided for the purposes of Final Acceptance; and

A2.1.2.11.5 NA or blank – not applicable.

A2.1.2.12 Notes: Where necessary, additional explanatory information relating to a CDRL data item is provided in this column.

A2.2 CDRL Item List

CDRL #	CDRL Title	SOW Para Ref	Version	Delivery Schedule	Qty	Addressee	DID # and Ref	DND Action Period	DND Action Required	Maint	Notes
MUGVS-PM-001	Contract Master Schedule	Para. 3.2.1 (pg. 8)	Draft	KO	1S	TA	MUGVS-PM-001	14	Review		Update aligned with Contract Status Report
			Revised or Final	DND Comments + 14	1S	TA, CA, PA, ILSM	App. A3.3 (pg. 39)	7	Review or Acceptance		
			Updates	With Contract Status Report, when changed	1S	TA, CA, PA, ILSM			Review		
MUGVS-PM-002	Contract Status Report	Para. 3.3.1 (pg. 8)	Draft	KO+28	1S	TA, ILSM	MUGVS-PM-002	14	Review		
			Revised or Final	DND Comments + 7	1S	TA, CA, PA, ILSM	App. A3.4 (pg. 41)	7	Review or Acceptance		
			Updates	Monthly	1S	TA, CA, PA, ILSM			Review		
MUGVS-PM-003	Meeting Agenda	Para. 3.4.5.1.1 (pg. 9)	Draft	Meeting Date - 7	1S	CA, TA, PA	MUGVS-PM-003	5	Review		
			Revised	Meeting Date - 1	1S	CA, TA, PA	App. A3.5 (pg. 42)				
			Final	Meeting Date	1H	CA, TA, PA		7	Review or Acceptance		
MUGVS-PM-004	Meeting Minutes	Para. 3.4.5.1.2 (pg. 9)	Draft	Meeting Date + 7	1S	CA, TA, PA	MUGVS-PM-004	7	Review		
			Revised or Final	DND Comments + 7	1S	CA, TA, PA	App. A3.6 (pg. 43)	7	Review or Acceptance		
MUGVS-ILS-201	Application of Spectrum Supportability	Para. 4.3.2 (pg. 10)	Draft	KO + 21	1S	TA	MUGVS-ILS-201	28	Review		
			Revised or Final	DND Comments + 14	1S	TA	App. A3.7 (pg. 44)	14	Review or Acceptance		
MUGVS-ILS-202	Operator Manual	Para. 4.4.1.1.1 (pg. 11)	Draft English	KO + 56	1S, 1H per comp	ILSM	MUGVS-ILS-202	21	Review		Hard copy is the action copy. One (1) soft and hard copy per component is required.

CDRL #	CDRL Title	SOW Para Ref	Version	Delivery Schedule	Qty	Addressee	DID # and Ref	DND Action Period	DND Action Required	Maint	Notes
			Revised or Final English	DND Comments + 21	1S, 1H per comp	ILSM	App. A3.8 (pg. 65)	14	Review or Acceptance		
			Draft Bilingual	Acceptance of English Operator Manual + 42	1S, 1H per comp	ILSM		14	Review		
			Revised or Final Bilingual	DND Comments + 14	1S, 1H per comp	ILSM		14	Review or Acceptance		
			Final		1H	Issued with each MUGVS					
MUGVS-ILS-203	Operator Quick Reference Card	Para. 4.4.1.2.1 (pg. 11)	Draft English	With English Draft Operator Manual	1S, 1H per comp	ILSM	MUGVS-ILS-203	14	Review		Hard copy is the action copy. One (1) soft and hard copy per component is required.
			Revised or Final English	DND Comments + 14	1S, 1H per comp	ILSM	App. A3.9 (pg. 67)	14	Review or Acceptance		
			Draft Bilingual	With Bilingual Draft Operator Manual	1S, 1H per comp	ILSM		14	Review		
			Revised or Final Bilingual	DND Comments + 14	1S, 1H per comp	ILSM		14	Review or Acceptance		
			Final		1H	Issued with each MUGVS					
MUGVS-ILS-204	Maintenance and Parts Handbook	Para. 4.4.1.3.1 (pg. 11)	Draft English	KO + 63	1S, 1H per comp	ILSM	MUGVS-ILS-204	21	Review		Hard copy is the action copy. One (1) soft and hard copy per component is required.
			Revised or Final English	DND Comments + 21	1S, 1H per comp	ILSM	App. A3.10 (pg. 69)	14	Review or Acceptance		

CDRL #	CDRL Title	SOW Para Ref	Version	Delivery Schedule	Qty	Addressee	DID # and Ref	DND Action Period	DND Action Required	Maint	Notes
			Draft Bilingual	Acceptance of English Maintenance and Parts Handbook + 42	1S, 1H per comp	ILSM		14	Review		
			Revised or Final Bilingual	DND Comments + 14	1S, 1H per comp	ILSM		14	Review or Acceptance		
			Final		1H	Issued with each MUGVS					
MUGVS-ILS-205	Operator Training Package	Para. 4.4.1.4.1 (pg. 11)	Draft English	Acceptance of English Operator Manual + 14	1S, 1H	ILSM	MUGVS-ILS-205	14	Review		Hard copy is the action copy.
			Revised or Final English	DND Comments + 14	1S, 1H	ILSM	App. A3.11 (pg. 71)	14	Review or Acceptance		
			Draft Bilingual	Acceptance of Bilingual Operator Manual + 42	1S, 1H	ILSM		14	Review		
			Revised or Final Bilingual	DND Comments + 14	1S, 1H	ILSM		14	Review or Acceptance		
			See notes		1S, 1H	Issued to Students at the Training Session(s)					Hard copy of Student Handout only, and soft copy on CD of the Operator Training Package.
MUGVS-ILS-206	Preservation, Storage and Reactivation Instructions	Para. 4.4.1.5.1 (pg. 11)	Draft English	KO + 70	1S, 1H	ILSM	MUGVS-ILS-206	14	Review		Hard copy is the action copy.
			Revised or Final English	DND Comments + 14	1S, 1H	ILSM	App. A3.12 (pg. 73)	14	Review or Acceptance		

CDRL #	CDRL Title	SOW Para Ref	Version	Delivery Schedule	Qty	Addressee	DID # and Ref	DND Action Period	DND Action Required	Maint	Notes
			Draft Bilingual	Acceptance of English Preservation, Storage and Reactivation Instructions + 28	1S, 1H	ILSM		14	Review		
			Revised or Final Bilingual	DND Comments + 14	1S, 1H	ILSM		14	Review or Acceptance		
MUGVS-ILS-207	Provisioning Parts Breakdown	Para. 4.5.3.1.1 (pg. 13)	Draft	Same time as the draft Maintenance and Parts Handbook	1S	ILSM	MUGVS-ILS-207	14	Review		Soft copy is the action copy.
			Revised or Final	DND Comments + 14	1S	ILSM	App. A3.13 (pg. 75)	14	Review or Acceptance		
			Updates	If required after the IPC Meeting	1S	ILSM		14	Review or Acceptance		
MUGVS-ILS-208	Supplementary Provisioning Technical Documentation	Para. 4.5.3.2.1 (pg. 14)	Draft	Same time as the draft Provisioning Parts Breakdown	1S	ILSM	MUGVS-ILS-208	14	Review		Soft copy is the action copy.
			Revised	IPC Meeting	1S	ILSM	App. A3.14 (pg. 77)	14	Review		
			Revised or Final	DND Comments + 14	1S	ILSM		14	Review or Acceptance		Revised or Final version must include changes resulting from decisions taken during the IPC Meeting.
MUGVS-ILS-209	Material Identification Data Set	Para. 4.5.3.3.1 (pg. 14)	Draft	Same time as the draft Provisioning Parts Breakdown	1S	ILSM	MUGVS-ILS-209	14	Review		Soft copy is the action copy.
			Revised or Final	DND Comments + 14	1S	ILSM	App. A3.15 (pg. 78)	14	Review or Acceptance		

CDRL #	CDRL Title	SOW Para Ref	Version	Delivery Schedule	Qty	Addressee	DID # and Ref	DND Action Period	DND Action Required	Maint	Notes
			Updates - For new items only	If Canada purchases additional serialized items (options or spares)	1S	ILSM		14	Review or Acceptance		
MUGVS-ILS-210	Identification Plates – Design Template & Populated Designs	Para. 4.7.1 (pg. 14)	Draft Design Template	KO + 28	1S, 1H	ILSM	MUGVS-ILS-210	14	Review		Hard copy is the action copy.
			Revised or Final Design Template	DND Comments + 14	1S, 1H	ILSM	App. A3.16 (pg. 79)	14	Review or Acceptance		
			Draft Populated Designs	Acceptance of Design Template + 28	1S, 1H	ILSM		14	Review		
			Revised or Final Populated Designs	DND Comments + 14	1S, 1H	ILSM		14	Review or Acceptance		
MUGVS-ILS-211	Controlled & Non-Controlled Goods List	Para. 4.8.1 (pg. 15)	Draft	Same time as the draft Provisioning Parts Breakdown	1S	ILSM	MUGVS-ILS-211	14	Review		Soft copy is the action copy.
			Revised or Final	DND Comments + 14	1S, 1H	ILSM	App. A3.17 (pg. 81)	14	Review or Acceptance		
MUGVS-ILS-212	Identification Labels for Storage & Shipment and Packaging Codes	Para. 4.9.3 (pg. 15)	Draft Labels	KO + 42	1S	ILSM	MUGVS-ILS-212	28	Review		
			Revised or Final Labels	DND Comments + 14	1S	ILSM	App. A3.18 (pg. 83)	14	Review or Acceptance		
			Draft Codes	Provision of NSNs + 35	1S	ILSM		21	Review		

CDRL #	CDRL Title	SOW Para Ref	Version	Delivery Schedule	Qty	Addressee	DID # and Ref	DND Action Period	DND Action Required	Maint	Notes
			Revised or Final Codes	DND Comments + 14	1S	ILSM		14	Review or Acceptance		
			Updates	If required after the a range of spares are chosen by DND	1S	ILSM		14	Review or Acceptance		
MUGVS-ILS-213	List of Items to be Supported	Para. 4.10.1 (pg. 16)	Draft	Final acceptance of the Maintenance and Parts Handbook, PPB and SPTD + 28	1S	ILSM	MUGVS-ILS-213	14	Review		
			Revised or Final	DND Comments + 14	1S	ILSM	App. A3.19 (pg. 85)	14	Review or Acceptance		
MUGVS-ILS-214	Equipment Environmental Assessment	Para. 5.4.1 (pg. 18)	Draft	KO + 84	1S	TA	MUGVS-ILS-214	56	Review		
			Revised or Final	DND Comments + 28	1S	TA	App. A3.20 (pg. 88)	14	Review or Acceptance		

A3.0 APPENDIX: DATA ITEM DESCRIPTION

A3.1 Data Deliverable Format

A3.1.1 **Unless otherwise specified as a specific requirement, the Contractor must deliver all of the soft copies of data deliverables, in formats compatible with the office software currently in use by the DND as listed:**

A3.1.1.1 Microsoft (MS) Windows 10 Enterprise Operating System (OS);

A3.1.1.2 MS Edge 2019;

A3.1.1.3 MS Office Professional Plus 2013 (Word, Excel, Access, PowerPoint and Outlook); and

A3.1.1.4 Foxit PhantomPDF version 10;

A3.2 DID Table Definitions

The following section defines the various blocks of information found on the Data Item Description (DID) forms:

BLOCK 1 – TITLE
The title of the data item for the DID.

BLOCK 2 - IDENTIFICATION NUMBER
The Data Item Description (DID) number, consisting of a sequential three-digit number and prefixed with an abbreviation code, to uniquely identify the DID. Note that the 001-099 series is reserved to Project Management (PM) DIDs, the 101-199 series is reserved to Systems Engineering (SE) DIDs and the 201-299 series is reserved to Integrated Logistics Support (ILS) DIDs. The abbreviation codes used for the prefix are:

“PM” for Project Management
“SE” for Systems Engineering
“ILS” for Integrated Logistics Support

BLOCK 3 - DESCRIPTION
Provides a general description of the data content requirements.

BLOCK 4 – RELATED DOCUMENT(S)
Provides a listing of the related documents and specifications associated with and required to produce this DID.

BLOCK 5 - CONTRACT REFERENCE
The specific paragraph numbers from the Contract Statement of Work and CDRL to assist in identifying the work effort associated with the data item.

BLOCK 6 - PREPARATION INSTRUCTIONS
Provides the preparation instructions for the content and format requirements for the DID.

A3.3 DID – Contract Master Schedule

DATA ITEM DESCRIPTION	
1. TITLE **Contract Master Schedule (CMS)**	2. IDENTIFICATION NUMBER **DID MUGVS-PM-001**
3. DESCRIPTION The CMS describes the Contractor's planned sequence of activities, milestones and decision points to enable the objectives of the Contract to be met. Additionally, the CMS defines the current Contract schedule status, comparing the current schedule to the contracted schedule.	
4. RELATED DOCUMENTS	5. CONTRACT REFERENCE **SOW**: **Para. 3.2.1 (pg. 8)** **CDRL**: **App. A2.2 (pg. 32)**

6. PREPARATION INSTRUCTIONS

6.1. **CONTENT**

6.1.1. **Data to be Included**

6.1.1.1. The CMS must graphically depict the contract schedule and progress at the activity level.

6.1.1.2. The CMS must graphically present or otherwise identify:

6.1.1.2.1. activities and their estimated durations;

6.1.1.2.2. milestones, including milestones in the contract;

6.1.1.2.3. the relationships and dependencies between activities and milestones to be accomplished by or for the Contractor in the performance of its obligations under the contract;

6.1.1.2.4. critical and non-critical paths;

6.1.1.2.5. floats available on all activities and milestones;

6.1.1.2.6. allocated resources for each activity; and

6.1.1.2.7. notes on the use of the CMS, including a glossary of terms and symbols used.

6.1.1.3. The CMS must include:

6.1.1.3.1. other major events, as agreed between the Contractor and DND;

6.1.1.3.2. DND tasks, where such tasks interface with, and may affect, Contractor tasks;

6.2. **SOFT COPY FORMAT**

6.2.1. The CMS must be submitted as a PDF file type.

6.2.2. The CMS must be displayed in a variety of formats:

6.2.2.1. a Gantt chart;

6.2.2.2. a list of all tasks, together with their planned and actual start and completion dates; and

6.2.2.3. a listing of milestones (including Milestones in the contract), together with their original, rescheduled, forecast and actual completion dates.

6.2.3. **Soft Copy format submission size below 7MB** – The CMS PDF may be submitted via email as follows:

6.2.3.1. To Field: As per the related CDRL section 9.A. Addressee, as identified in the contract.

6.2.3.2. Subject Field: MUGVS-PM-001 – CMS – [Rev #] – [Date of Issue]

6.2.4. **Soft Copy format submission size at or above 7MB** - The CMS PDF must be submitted on CD or DVD media and be labelled as follows:

6.2.4.1. Mini Unmanned Ground Vehicle System

6.2.4.2. CMS;

6.2.4.3. MUGVS-PM-001;

6.2.4.4. The Revision number, and

6.2.4.5. The date of issue.

A3.4 DID – Contract Status Report

DATA ITEM DESCRIPTION	
1. TITLE **Contract Status Report (CSR)**	2. IDENTIFICATION NUMBER **DID MUGVS-PM-002**
3. DESCRIPTION The Contract Status Report (CSR) is the principal statement and explanation of the status of the contract at the end of each reporting period, and will summarize the Contractor's progress and activities in relation to the Project milestones, schedule, and contract data deliverables.	
4. RELATED DOCUMENTS	5. CONTRACT REFERENCE **SOW**: **Para. 3.3.1 (pg. 8)** **CDRL**: **App. A2.2 (pg. 32)**

6. PREPARATION INSTRUCTIONS

6.1. **CONTENT**

6.1.1. The CSR must identify the date at which the CSR is valid, and the time period since the status date of the previous CSR (the 'reporting period').

6.1.2. The CSR must include the following information:

6.1.2.1. A summary of significant work activities (including those undertaken by major Subcontractors) undertaken during the reporting period;

6.1.2.2. A summary of significant work activities (including those undertaken by major Subcontractors) expected to be undertaken in the next reporting period.

6.1.2.3. A summary of progress (including progress by major Subcontractors) against the CMS.

6.1.2.4. A narrative detailing progress against milestones, expected date of completion of near milestones, problem areas and work-around plans where required;

6.1.2.5. A status report on contract data deliverable end items as called up in the CDRLs;

6.1.2.6. An Integrated Logistic Support (ILS) report, giving the status of ILS activity;

6.1.2.7. A list of correspondence that requires a response from the DND/PSPC, but for which no response has been received; and

6.1.2.8. A list of DND/PSPC correspondence to the Contractor for which a response is outstanding, and an estimate of the response date.

6.2. **SOFT COPY FORMAT**

6.2.1. The CSR must be submitted as a PDF file type.

6.2.2. The CSR PDF must be submitted via email (submission size not to exceed 7MB) as follows:

6.2.2.1. To Field: As per the related CDRL section 9.A. Addressee, as identified in the contract.

6.2.2.2. Subject Field: MUGVS-PM-002 – CSR – [Rev #] – [Date of Issue]

A3.5 DID – Meeting Agenda

DATA ITEM DESCRIPTION	
1. TITLE **Meeting Agenda**	2. IDENTIFICATION NUMBER **DID MUGVS-PM-003**
3. DESCRIPTION The Meeting Agenda contains the venue information and identifies the discussion items to be covered at meetings.	
4. RELATED DOCUMENTS	5. CONTRACT REFERENCE **SOW**: **Para. 3.4.5.1.1 (pg. 9)** **CDRL**: **App. A2.2 (pg. 32)**

6. PREPARATION INSTRUCTIONS

6.1. **CONTENT**

6.1.1. The Meeting Agenda must set forth the venue, identify all requirements and list the discussion items to be covered at the meeting.

6.1.2. Venue. The Meeting Agenda must address the venue as follows:

6.1.2.1. Meeting Identification Number;

6.1.2.2. Purpose;

6.1.2.3. Date, time and location; and

6.1.2.4. Attendees.

6.1.3. Discussion items. The Meeting Agenda must address the discussion items through the following sections:

6.1.3.1. Opening Remarks;

6.1.3.2. Agenda Review;

6.1.3.3. Review of Previous Minutes;

6.1.3.4. Opened Discussion Items;

6.1.3.5. New Discussion Items;

6.1.3.6. Review of Action Items;

6.1.3.7. Next Venue; and

6.1.3.8. Closing Remarks.

6.2. **HARD COPY FORMAT**

6.2.1. The Meeting Agenda must be printed on paper with these characteristics:

6.2.1.1. Weight of no less than 90 gsm;

6.2.1.2. Brightness of no less than 96 ISO brightness;

6.3. **SOFT COPY FORMAT**

6.3.1. The Meeting Agenda must be submitted as a MS Word file type.

6.3.2. The Meeting Agenda MS Word document must be submitted via email (submission size not to exceed 7MB) as follows:

6.3.2.1. To Field: As per the related CDRL section 9.A. Addressee, as identified in the contract.

6.3.2.2. Subject Field: MUGVS-PM-003 – Meeting Agenda – [Rev #] – [Date of Issue]

A3.6 DID – Meeting Minutes

DATA ITEM DESCRIPTION	
1. TITLE **Meeting Minutes**	2. IDENTIFICATION NUMBER **DID MUGVS-PM-004**
3. DESCRIPTION The Meeting Minutes contains the detailed records of proceedings, discussions, decisions and action items from meetings.	
4. RELATED DOCUMENTS	5. CONTRACT REFERENCE **SOW**: **Para. 3.4.5.1.2 (pg. 9)** **CDRL**: **App. A2.2 (pg. 32)**

6. PREPARATION INSTRUCTIONS

6.1. **CONTENT**

6.1.1. The Meeting Minutes must contain the detailed records of proceedings, discussions, decisions and action items from the meeting and be presented through the following sections:

6.1.1.1. General – consisting of meeting identification number, purpose, date, time and location;

6.1.1.2. Attendees, consisting of the organization each person represents, and the identification of the Chairperson(s);

6.1.1.3. Opening Remarks;

6.1.1.4. **Action Item Report** - used to monitor issues, assign responsibility, direct action and track status, history, and progress, and must consisting of:

6.1.1.4.1. Item #; date initiated; required action; assigned actionee; target completion date; cross-reference to all related action items.

6.1.1.4.2. Action Item Report must be **updated** with each meeting and must consisting of:

6.1.1.4.2.1. Action Item current status and the actual date completed;

6.1.1.5. Next Venue;

6.1.1.6. Closing Remarks;

6.2. **SOFT COPY FORMAT**

6.2.1. The Meeting Minutes must be submitted as a PDF file type.

6.2.2. The Meeting Minutes PDF must be submitted via email (submission size not to exceed 7MB) as follows:

6.2.2.1. To Field: As per the related CDRL section 9.A. Addressee, as identified in the contract.

6.2.2.2. Subject Field: MUGVS-PM-004 – Meeting Minutes – [Rev #] – [Date of Issue]

A3.7 DID – Application for Spectrum Supportability

DATA ITEM DESCRIPTION	
1. TITLE **Application for Spectrum Supportability**	2. IDENTIFICATION NUMBER **DID MUGVS-ILS-201**
3. DESCRIPTION This Application for Spectrum Supportability document (DND form 552) describes the general wireless equipment usage as well as the transmitter, antenna and receiver equipment characteristics of the system that is provided.	
4. RELATED DOCUMENTS	5. CONTRACT REFERENCE **SOW**: **Para. 4.3.2 (pg. 10)** **CDRL**: **App. A2.2 (pg. 32)**

6. PREPARATION INSTRUCTIONS

6.1. **CONTENT**

6.1.1. The Application for Spectrum Supportability must be completed and provided in accordance with the requirements as outlined in the Application for Spectrum Supportability.

6.1.2. The following sections of the Application for Spectrum Supportability must be completed:

6.1.2.1. Part 1, Block 1 – Equipment Nomenclature and/or Model Number;

6.1.2.2. Part 2 – Transmitter Equipment Characteristics;

6.1.2.3. Part 3 – Receiver Equipment Characteristics, and

6.1.2.4. Part 4 – Antenna Equipment Characteristics.

6.1.3. The values entered in the Application for Spectrum Supportability must be measured values.

6.1.4. Where equipment is developmental, specified values may be substituted for measured values, and so indicated on the forms. If the proposed equipment is in use by the United States military it may already have a US Department of Defence (DoD) Form 1494. If available, a DoD 1494 form will be accepted by DND in lieu of a DND 552.

6.2. **SOFT COPY FORMAT**

6.2.1. The Application for Spectrum Supportability must be provided as a PDF file.

6.2.2. **Soft Copy format submission size below 7MB** – The Application for Spectrum Supportability may be submitted via email as follows:

6.2.2.1. To Field: As per the related CDRL section 9.A. Addressee, as identified in the contract.

6.2.2.2. Subject Field: MUGVS-ILS-201 – Application for Spectrum Supportability – [Rev #] – [Date of Issue]

6.2.3. **Soft Copy format submission size at or above 7MB** - The Application for Spectrum Supportability file must be submitted on CD or DVD media and be labelled as follows:

6.2.3.1. Mini Unmanned Ground Vehicle System

6.2.3.2. Application for Spectrum Supportability

6.2.3.3. MUGVS-ILS-201;

6.2.3.4. The Revision number, and

6.2.3.5. The date of issue.

Application for Spectrum Supportability **Demande d'octroi de Fréquences**	Date	Page

To: À:	From (Office making request): De (Bureau qui présente la demande):

1. Equipment nomenclature and/or model number
   Désignation du matériel et numéro de modèle

2. Status of supportability request (check one)
   Centre de demande d'octroi (cochez une seule case)

☐ Experimental research or exploratory development / Recherche expérimentale ou développement préliminaire
☐ Advanced or engineering development / Développement avancé ou ingénierie
☒ Operational / Utilisation opérationnelle

1. Equipment Usage – Utilisation du matériel

3. **Functional and purpose**: TRANSMISSION OF LIVE CAMERA IMAGES AND CONTROL SIGNALS BETWEEN THE MINI UNMANNED GROUND VEHICLE (MUGV) AND THE CONTROL AND COMMUNICATION SYSTEM (CCS).
   Fonction et but: TRANSMISSION D'IMAGES VIDÉO ET DE SIGNAUX DE COMMANDE ENTRE LE MINI VÉHICULE TERRESTRE TÉLÉPILOTÉ (MUGV) ET LE SYSTÈME DE CONTRÔLE ET DE COMMUNICATION (CCS).

4. **Method of operation:** OPERATOR REMOTELY OPERATE THE MUGV BY MEANS OF CCS RF VIDEO TRANSMITTER & RECEIVER WIRELESS LINK.
   Mode de fonctionnement: UN OPÉRATEUR OPÈRE À DISTANCE ET MANIPULE LE MUGV AU MOYEN DE LIAISON SANS FIL ÉMETTEUR ET RECEPTEUR VIDÉO RF DU CCS.

5. **Extent of use:** MISSION DURATION IS 6 HOURS WITH CONTINUOUS USE DURING OPÉRATION.
   Étendue de l'utilisation : LA DURÉE DE LA MISSION EST DE 6 HEURES AVEC UTILISATION CONTINUE DURANT L'UTILISATION.

6. **Operational environment:** OPÉRATION IN ALL ENVIRONMENTAL CONDITIONS, LOCATIONS CAN BE IN URBAN AREAS AND ALL TERRAIN CONDITIONS IN THE FIELD.
   Milieu d'utilisation: FONCTIONNEMENT DANS TOUTES LES CONDITIONS ENVIRONMENTALES, LES EMPLACEMENTS PEUVENT ÊTRE DANS DES ZONES URBAINES ET TOUTES LES CONDITIONS DE TERRAIN SUR LE TERRAIN.

7. **Geographical area of experimental research, or developmental evaluation:** NO RESEARCH OR DEVELOPMENT.
   Région géographique de la recherche expérimentale ou de l'évaluation du développement : AUCUNE RECHERCHE OU DÉVELOPPEMENT.

8. **Geographical area of operational use:** WORLWIDE
   Région géographique de l'utilisation opérationnelle : À L'ÉCHELLE MONDIALE

9 **Number of equipments in initial phase:** 48 MINI UNMANNED GROUND VEHICLE SYSTEM (MUGV).
   Nombre d'appareils pendant la phase initiale : 48 SYSTÈME MINI VEHICULE TERRESTRE TÉLÉPILOTÉ (MUGV).

10. **Number of equipments planned for operational use:** EOD TEAMS WILL USE ONE (1) MUGV PER TEAM
    Nombre d'appareils prévu pour l'utilisation opérationnelle : LES ÉQUIPES EOD VONT UTILISER UN (1) MUGV PAR ÉQUIPE

11. **Number of these equipments operating simultaneously in the same electromagnetic environment:** MAX SIX (6) MUGV PER LOCATION, CONSISTING OF SIX (6) UGV AND SIX (6) CCS.
    Nombre d'appareils fonctionnant simultanément dans le même milieu électromagnétique : MAX SIX (6) MUGV PAR EMPLACEMENT, COMPRENANT SIX (6) UGV ET SIX (6) CCS.

12. **Target date for the start and end of experimental or developmental evaluation:** N/A
    Date prévue pour le commencement et la fin de l'évaluation expérimentale ou de l'évaluation ou développement : N/A

13. **Target date for operational use:** 2025/2026
    Date prévue d'utilisation opérationnelle : 2025/2026

14. Previous DND 552 application number (for DIMTPS 5 use only)
    Numéro d'application de l'ancien formulaire MDN 552 (pour utilisation de DTPSGI 5 seulement)

☐ Continued unchanged (see remarks) / Reste en vigueur (voir les remarques)
☐ Superseded / Est remplacé
☐ Related / Demeure connexe
☐ None / Aucun

DND 552_____ CCEB CF 299_____

2. Transmitter Equipment Characteristics - Caractéristiques du matériel émetteur

1. Nomenclature, Manufacturer's Model No.:
Désignation, n° de modèle du fabricant:

2. Manufacturer's Name:
Nom du fabricant:

3. Transmitter Installation:
Installation émettrice:

4. Transmitter Type:
Type d'émetteur:

5. Tuning Range:
Gamme d'accord:

6. Method of Tuning:
Méthode d'accord:

7. RF Channelling Capability:
Répartition des voles RF:

8. Emission Designator(s):
Identificateur(s) d'émission:

9. Frequency Tolerance:
Tolérance de fréquence:

10. Filter Employed — Yes / No
Filtre utilisé: Oui ☐ Non ☐

11. Spread Spectrum: Yes / No
Spectre étalé: Oui ☐ Non ☐

12. Emission Bandwidth
Largeur de bande de l'émission:
Calculated ☐ Calculée — Measured ☐ Mesurée
(a) –3 dB _____
(b) –20 dB _____
(c) –40 dB _____
(d) –60 dB _____
(e) OCCBW _____
Largeur de bande occupée

13. Maximum Bit Rate:
Débit binaire maximal:

14. Modulation Techniques and Coding:
Techniques de modulation et de codage:

15. Maximum Modulation Frequency:
Fréquence de modulation et de codage:

16. Pre-emphasis: Yes / No
Préaccentuation: Oui ☐ Non ☐

17. Deviation Ratio:
Rapport de déviation:

18. Pulse Characteristics:
Caractéristiques des impulsions:
(a) Rate – Fréq. de récurrence_____
(b) Width – Durée_____
(c) Rise Time – Temps de montée_____
(d) Fall Time – Temps de descente_____
(e) Comp Ratio – Rapport de comp._____
Largeur de bande occupée

19. Power – Puissance:
(a) Mean – Moyenne _____
(b) PEP – En crête_____

20. Output Device:
Dispositif de sortie:

21. Harmonic Level:
Niveau des harmoniques:
(a) 2nd – 2e_____
(b) 3rd – 3e_____
(c) Other – Autres_____

22. Spurious Level:
Niveau du rayonnement non essentiel:

23. Industry Canada Type Approval No.:
Nº d'homologation de l'industrie Canada:

24. Remarks:
Remarques:

3. Receiver Equipment Characteristics – Caractéristiques du matériel récepteur

1. Nomenclature, Manufacturer's Model No.:
Désignation, n° de modèle du fabricant:

2. Manufacturer's Name:
Nom du fabricant:

3. Receiver Installation:
Installation réceptrice:

4. Receiver Type:
Type de récepteur:

5. Tuning Range:
Gamme d'accord:

6. Method of Tuning:
Méthode d'accord:

7. RF Channelling Capability:
Répartition des voles RF:

8. Emission Designator(s):
Identificateur(s) d'émission:

9. Frequency Tolerance:
Tolérance de fréquence:

10. IF Selectivity: 1st 2nd 3rd
Sélectivité FI: 1ére 2e 3e
(a) –3 dB_____
(b) –20 dB_____
(c) –60 dB _____

12. RF Selectivity:
Sélectivité RF:
Calculated ☐ Measured ☐
Calculée Mesurée
(a) –3 dB _____
(b) –20 dB_____
(c) –40 dB_____

12. IF Frequency:
Fréquence intermédiaire:
(a) 1st – 1ére _____
(b) 2nd – 2e _____
(c) 3rd – 3e _____

13. DIMTPS 5 use only:
Réservé au DTPSGI 5:

14. DIMTPS 5 use only:
Réservé au DTPSGI 5:

15. Oscillator Tuned:
Oscillateur accordé:

	1st 1ére	2nd 2e	3rd 3e
(a) Above Tuned Frequency / Au-dessus de la fréq. d'accord	☐	☐	☐
(b) Below Tuned Frequency / Au-dessous de la fréq. d'accord	☐	☐	☐
(c) Either Above or Below the Frequency / Ou au-dessus ou au-dessous de la fréq.	☐	☐	☐

16. Maximum Bit Rate:
Débit binaire maximal:

17. Sensitivity:
Sensibilité:
(a) Sensitivity – Sensibilité_____dBm
(b) Criteria – Critère_____
(c) Noise Fig – Facteur de bruit_____ dB
(d) Noise Temp – Temp. de bruit_____Kelvin

18. De-emphasis: Yes ☐ No ☐
Désaccentuation: Oui Non

19. Image Rejection:
Rejet de fréquence image:

20. Spurious Rejection:
Rejet des fréquences parasites:

21. Remarks:
Remarques:

22. Industry Canada Type Approval No.:
N° d'homologation de l'industrie Canada:

4. Antenna Equipment Characteristics – Caractéristiques du matériel d'antenne

1. Transmitting / Émission ☐ Receiving / Réception ☐ Transmitting and Receiving / Émission et réception ☐

2. Nomenclature, Manufacturer's Model No.:
Désignation, nº de modèle du fabricant:

3. Manufacturer's Name:
Nom du fabricant:

4. Frequency Range:
Gamme de fréquences:

5. Type:

6. Polarization – Polarisation:

7. Scan Characteristics:
Caractéristiques de balayage:
- (a) Type_____
- (b) Vertical Scan:
  Balayage vertical:_____
  - (1) Max Elev
    Angle de site max._____
  - (2) Min Elev
    Angle de site min._____
  - (3) Scan Rate
    Vitesse de balayage_____
- (c) Horizontal Scan:
  Balayage horizontal:_____
  - (1) Sector Scanned
    Secteur balayé_____
  - (2) Scan Rate
    Vitesse de balayage_____
- (d) Sector Blanking / Effacement de secteur Yes / Oui ☐ No / Non ☐

8. Gain:
- (a) Main Beam
  Faisceau principal_____
- (b) 1st Major Side Lobe
  1er lobe latéral important_____

9. Beamwidth :
Largeur du faisceau:
- (a) Horizontal_____
- (b) Vertical_____

10. Remarks:
Remarques:

Originator: Rédacteur:	Position:	Telephone Number: Numéro de téléphone:	Date:

INSTRUCTIONS FOR COMPLETING DND FORM 552

Classification. Enter classification and downgrading stamp. Indicate by check mark whether for Experimental Research or Exploratory Development, Advanced or Engineering Development, or Operational Utilization. The classification of the title should be appropriately indicated (e.g. (U), (C) or (S)). Classified information contained in the completed form should be indicated:

a) as a general statement in a Remarks block, such as, “The purpose, functions, operational use, frequency band, emission bandwidths, and power are classified X”;

b) by an enumeration of the applicable paragraphs and subparagraphs with their classifications; or

c) the classification may be marked alongside each entry on the form.

PART 1: EQUIPMENT USAGE

Part 1, Block 1: Nomenclature and Model Number

Provide nomenclature and equipment type (e.g. AN/FPS-16 Instrumentation Radar).

Part 1, Block 2: Status of Supportability Request

The supportability request will be for one of these purposes:

a. Experimental research or exploratory development:

(1) To test the feasibility of new techniques or concepts of natural phenomena and environment, and efforts towards solution of problems in the physical, behavioural and social sciences that have no direct military application; and

INSTRUCTIONS POUR REMPLIR LE FORMULAIRE DND 552

Classification. Entrer la classification et le déclassement. Indiquer par un crochet s’il s’agit d’une recherche expérimentale ou d’un développement préliminaire, d’un développement avancé ou d’ingénierie ou d’une utilisation opérationnelle. La classification du titre doit être indiquée convenablement (par exemple, (U), (C) ou (S)). L’information classifiée du formulaire rempli doit être signalée :

a) en tant qu’énoncé général dans le bloc Remarques tel que : « L’objet, les fonctions, l’utilisation opérationnelle, la bande de fréquences, les largeurs de bandes d’émission et la puissance sont classifiés X »;

b) par une énumération des paragraphes et des sous-paragraphes applicables accompagnés de leur classification; ou

c) la classification peut être indiquée à côté de chaque entrée du formulaire.

PARTIE 1 : UTILISATION DE L’ÉQUIPEMENT

Partie 1, Bloc 1 : Désignation et numéro de modèle

Inscrire la nomenclature et le type d’équipement (par exemple, radar d’instrumentation AN/FPS-16).

Partie 1, Bloc 2 : Statut de la demande de soutenabilité

La demande de soutenabilité de fréquences est faite pour l’un de ces buts :

a. Recherche expérimentale ou développement préliminaire :

(1) Pour vérifier la faisabilité de techniques ou de concepts nouveaux des phénomènes ou de l’environnement naturel et pour consacrer des efforts en vue de trouver une solution à des problèmes liés aux sciences physiques, comportementales et sociales qui n’ont aucune application militaire directe; et

(2) To test the feasibility of adapting conventional techniques to new purposes prior to projection into development planning. Includes all effort directed toward solution of specific military problems, short of major development projects.

b. Advanced or engineering development:

(1) to develop equipment which have moved into the development of hardware for experimental or operational test;

(2) to modify existing operational equipment for improved performance;

(3) to develop programs being engineered for service use, but have not yet been approved for production and service deployment; and

(4) to continue development of equipment/systems that have been approved for production and service use.

c. To operate and test equipment which have passed the development phase and are planned for operational use for:

(1) tactical and training purposes; or

(2) non-tactical purposes, such as for test range instrumentation.

Part 1, Block 3: Function and Purpose

Describe as specifically as possible the function and purpose to be performed. For example: guided missile control radar; troposcatter communications equipment; provides acquisition and tracking information; short range communications; telemetering for quality control.

Part 1, Block 4: Method of Operation

Describe the method of operation. For example: radar activates beacon transponder in missile with coded pulses; beacon provides missile track; radar

(2) Pour vérifier la faisabilité de l'adaptation de techniques conventionnelles aux nouveaux objectifs avant la projection dans la planification de développement. Cette démarche comprend tous les efforts consacrés à trouver la solution de problèmes militaires spécifiques, à l'exception des projets majeurs de développement.

b. Développement avancé ou d'ingénierie :

(1) pour développer de l'équipement qui s'est introduit dans le développement du matériel pour les essais expérimentaux ou opérationnels;

(2) pour modifier l'équipement opérationnel existant afin d'améliorer la performance;

(3) pour développer des programmes préparés pour l'usage militaire mais qui n'ont pas encore été approuvés pour la production et le déploiement militaire; et

(4) pour continuer le développement de systèmes et d'équipement qui ont été approuvés pour la production et l'usage militaire.

c. Pour exploiter et vérifier l'équipement qui a passé la phase du développement et dont l'utilisation opérationnelle est prévue pour :

(1) fins tactiques et de formation; ou

(2) fins non tactiques telle que l'instrumentation d'un champ de tir d'essai.

Partie 1, Bloc 3 : Fonction et but

Décrire aussi précisément que possible la fonction à exécuter et le but à atteindre. Par exemple : radar de contrôle de missile guidé; équipement de communication de diffusion troposphérique; fournit de l'information d'acquisition et de poursuite; communications à courte portée; télémétrie pour le contrôle de la qualité.

Partie 1, Bloc 4 : Mode de fonctionnement

Décrire le mode de fonctionnement. Par exemple : le radar actionne le transpondeur de la radiobalise dans le missile par des impulsions codées; la radiobalise détermine la piste de poursuite du missile; les radars transmettent aussi des signaux de

also transmits coded pulse command signals to missile beacon receiver for guidance.

Part 1, Block 5: Extent of Use

Describe operational extent of usage. For example: continuous or intermittent; expected duty cycle during mission; expected number of hours of operation per day or other appropriate time period. Indicate any conditions governing intermittent use. If appropriate, describe mission phase during which system operates.

Part 1, Block 6: Operational Environment

Give brief description of ultimate operational environment. For example: amphibious landing operations; defence of strategic target area; sea areas; field army. Provide any additional environmental factors pertinent to a meaningful assessment of electromagnetic compatibility, such as specific vehicle/platform types, expected mobility or other factors affecting the environment variability.

Part 1, Block 7: Geographical Area of Experimental Research or Developmental Evaluation

State the geographical area used for the experimental research or development.

Part 1, Block 8: Geographical Area of Operational Use

State the geographical area for potential use. Provide latitude and longitude of centre of operational area and radius of operation in kilometres.

Part 1, Block 9: Number of Equipment in Initial Phase

List number of equipment planned for experimental or developmental phase.

Part 1, Block 10: Number of Equipment Planned for Operational Use

List number of equipment planned for operational use.

commande codés au récepteur de la radiobalise du missile pour le guidage.

Partie 1, Bloc 5 : Étendue de l’utilisation

Décrire l’étendue opérationnelle de l’utilisation. Par exemple : continue ou intermittente; facteur d’utilisation prévu au cours de la mission; nombre d’heures d’exploitation prévues par jour ou autre période appropriée. Indiquer toute condition gouvernant l’utilisation intermittente. Décrire au besoin la phase de la mission durant laquelle le système fonctionne.

Partie 1, Bloc 6 : Milieu opérationnel

Donner une brève description du milieu opérationnel ultime. Par exemple : opérations amphibies de débarquement; défense d’une zone cible stratégique; zones maritimes; armée de campagne. Fournir tous les facteurs environnementaux supplémentaires pertinents à l’évaluation significative de la compatibilité électromagnétique, tels que les types particuliers de véhicules ou de plates-formes, la mobilité prévue ou les autres facteurs ayant un effet sur la variabilité de l’environnement.

Partie 1, Bloc 7 : Région géographique de la recherche expérimentale ou de l’évaluation du développement

Indiquer la région géographique qui sert à la recherche expérimentale ou au développement.

Partie 1, Bloc 8 : Région géographique de l’utilisation opérationnelle

Indiquer la région géographique de l’utilisation potentielle. Donner la latitude et la longitude du centre de la zone opérationnelle et le rayon d’opération en kilomètres.

Partie 1, Bloc 9 : Nombre d’appareils pendant la phase initiale

Indiquer le nombre d’appareils prévus pour la phase expérimentale ou de développement.

Partie 1, Bloc 10 : Nombre d’appareils prévus pour l’utilisation opérationnelle

Indiquer le nombre d’appareils prévus pour l’utilisation opérationnelle.

Part 1, Block 11: Number of These Equipment Operating Simultaneously in the Same Electromagnetic Environment

Indicate maximum number of these systems that will be operating simultaneously in the same environment. For example: three (3) missiles will be flown simultaneously in an operating area.

Part 1, Block 12: Target Date for the Start and End of Experimental or Developmental Evaluation

Indicate the dates on which it is expected that the experimental or developmental phase will start and finish.

Part 1, Block 13: Target Date for Operational Use

Indicate target date for operational use.

Part 1, Block 14: Previous DND 552 Application Number

For DIMTPS 5 use only.

Partie 1, Bloc 11 : Nombre d'appareils fonctionnant simultanément dans le même milieu électromagnétique

Indiquer le nombre maximal d'appareils fonctionnant simultanément dans le même environnement. Par exemple : trois (3) missiles voleront simultanément dans la zone opérationnelle.

Partie 1, Bloc 12 : Date prévue pour le commencement et la fin de l'évaluation expérimentale ou de l'évaluation du développement

Indiquer les dates auxquelles il est prévu que la phase expérimentale ou de développement débutera et se terminera.

Partie 1, Bloc 13 : Date prévue d'utilisation opérationnelle

Indiquer la date prévue pour l'utilisation opérationnelle.

Partie 1, Bloc 14 : Numéro de demande de l'ancien formulaire DND 552

À l'usage exclusif du DTPSGI 5.

PART 2: TRANSMITTER EQUIPMENT CHARACTERISTICS

Part 2, Block 1: Nomenclature, Manufacturer's Model No.

Enter the Government assigned alphanumeric equipment designation. If not available, enter the manufacturer's model number (e.g. MIT 502), and indicate Manufacturer's Name (Part 2, block 2). If this too is not available, enter a short descriptive title (e.g. ATS-6 Telemetry Transmitter).

Part 2, Block 2: Manufacturer's Name

Enter the manufacturer's name, if available. If a manufacturer's model number is listed in Nomenclature (Part 2, block 1), this block must be completed.

Part 2, Block 3: Transmitter Installation

List specific types of vehicles, ships, planes or buildings, etc., where the transmitters will be installed.

Part 2, Block 4: Transmitter Type

Enter the generic name of the transmitter (e.g. Frequency Scan, Scan While Track Radar, Monopulse Tracker, AM or PM Communications). In addition, for radar enter the radar type (e.g. Non-FM Pulse, FM Pulse, Frequency Hopping, CW or FM-CW).

Part 2, Block 5: Tuning Range

Enter the frequency range through which the transmitter is capable of being tuned (e.g. 225 to 400 MHz). For equipment designed to operate only at a single frequency, enter that frequency. Include units (e.g. kHz, MHz or GHz).

Part 2, Block 6: Method of Tuning

Enter the method of tuning (e.g. crystal, synthesizer or cavity). If the equipment is not readily tuneable in the field, indicate in Remarks (Part 2, block 24) the complexity of tuning. Include complexity factors such as skill levels involved, major assemblies

PARTIE 2 : CARACTÉRISTIQUES DE L'ÉQUIPEMENT ÉMETTEUR

Partie 2, Bloc 1 : Désignation, n° de modèle du fabricant

Indiquer la désignation alphanumérique de l'équipement désigné par le gouvernement. S'il n'est pas disponible, indiquer le numéro du modèle du fabricant (par exemple, MIT 502) et indiquer le nom du fabricant (partie 2, bloc 2). Si ces renseignements ne sont également pas disponibles, indiquer un court titre descriptif (par exemple, émetteur de télémétrie ATS-6).

Partie 2, Bloc 2 : Nom du fabricant

Indiquer le nom du fabricant s'il est disponible. Si le numéro du modèle du fabricant est indiqué à la partie 2, bloc 1, ce bloc doit être rempli.

Partie 2, Bloc 3 : Installation émettrice

Indiquer les types spécifiques de véhicules, de navires, d'aéronefs ou de bâtiments, etc., où les émetteurs seront installés.

Partie 2, Bloc 4 : Type d'émetteur

Indiquer le nom générique de l'émetteur (par exemple, balayage de fréquences, radar de poursuite sur informations discontinues, traqueur monopulse, communications AM ou PM). De plus, pour les radars, indiquer le type du radar (par exemple, à impulsions autres que FM, à impulsions FM, à sauts de fréquence, à ondes continues ou à FM-CW).

Partie 2, Bloc 5 : Gamme d'accord

Indiquer la gamme de fréquences sur laquelle l'émetteur peut être accordé (par exemple, de 225 à 400 MHz). Indiquer la fréquence dans le cas de l'équipement conçu pour fonctionner seulement à une seule fréquence. Indiquer les unités (par exemple, kHz, MHz ou GHz).

Partie 2, Bloc 6 : Méthode d'accord

Indiquer la méthode d'accord (par exemple, quartz, synthétiseur ou cavité). Si l'équipement ne peut être accordé facilement sur le terrain, indiquer dans le bloc Remarques (partie 2, bloc 24) la complexité de l'accord. Inclure les facteurs de

involved, time required, and location (factory or depot) where equipment is to be tuned.

complexité tels que les niveaux de compétence nécessaires, les ensembles principaux nécessaires, le temps nécessaire et l'emplacement (usine ou dépôt) où l'équipement doit être accordé.

Part 2, Block 7: RF Channelling Capability

Describe the RF channelling capability:

a. for uniformly spaced channels, enter the centre frequency of the first channel and channel spacing (e.g. first channel 406 MHz, 100 kHz increments);

b. for continuous tuning, enter the lowest frequency and the word "continuous"; and

c. for others, such as SSB or cases where channel selection is under software control, enter a detailed description in Remarks (Part 2 block 24, e.g. degraded channels, internal hardwiring limitations or lockout capability for frequency hopping systems).

Partie 2, Bloc 7 : Répartition des canaux RF

Décrire la répartition des canaux RF :

a. pour indiquer la fréquence centrale du premier canal et l'espacement des canaux (par exemple, premier canal à 406 MHz avec incréments de 100 kHz) dans le cas des canaux uniformément espacés;

b. pour indiquer la plus basse fréquence et le mot « continu » dans le cas de l'accord continu; et

c. pour les autres, tels que BLU ou les cas où la sélection du canal est commandée par logiciel, entrer une description détaillée (par exemple, canaux dégradés, limitations internes de câblage ou capacité de verrouillage pour les systèmes à sauts de fréquence) dans le bloc Remarques (partie 2, bloc 24).

Part 2, Block 8: Emission Designators

Enter the emission designators, including the necessary bandwidth, for each designator, in accordance with Appendix D3 (e.g. 16K0F3E). For systems with a frequency hopping mode as well as a non-hopping mode, enter the emission designators for each mode. Identify each mode as hopping or non-hopping.

Partie 2, Bloc 8 : Identificateur(s) d'émission

Indiquer le ou les identificateurs d'émission, y compris la largeur de bande nécessaire pour chaque identificateur conformément au contenu de l'appendice D3 (par exemple, 16K0F3E). Entrer les identificateurs d'émission de chaque mode dans le cas des systèmes avec un mode à sauts de fréquence ainsi que ceux avec un mode sans sauts de fréquence. Identifier chaque mode comme étant à sauts ou sans sauts.

Part 2, Block 9: Frequency Tolerance

Enter the frequency tolerance (i.e. the maximum departure of a transmitter from its assigned frequency after normal warm-up time). Indicate the units in parts per million (ppm) for all emission types except single sideband, which must be indicated in Hertz (Hz).

Partie 2, Bloc 9 : Tolérance de fréquence

Indiquer la tolérance de fréquence (c'est-à-dire, l'écart maximal d'un émetteur de sa fréquence assignée après le temps de réchauffement normal). Indiquer les unités en parties par million (ppm) pour tous les types d'émissions sauf la bande latérale unique, qui doit être indiquée en hertz (Hz).

Part 2, Block 10: Filter Employed

Check the appropriate box.

Partie 2, Bloc 10 : Filtre utilisé

Cocher la case appropriée.

Part 2, Block 11: Spread Spectrum

Partie 2, Bloc 11 : Spectre étalé

Check the appropriate box. If “Yes”, refer to instructions for Modulation (Part 2, block 14).

Cocher la case appropriée. Se reporter aux instructions pour remplir le bloc Modulation (partie 2, bloc 14) si la case « Oui » est cochée.

Part 2, Block 12: Emission Bandwidth

Enter the emission bandwidths for which the transmitter is designed at the -3, -20 and -60 dB levels and the occupied bandwidth. For pulse radar transmitters the bandwidth at -40 dB must also be entered. The emission bandwidth is defined as the bandwidth appearing at the antenna terminals and includes any significant attenuation contributed by filtering in the output circuit or transmission lines. Values of emission bandwidth specified should be indicated as calculated or measured, by checking the appropriate box. If calculated, the methods used must be in accordance with Industry Canada TRC 43, which is available on the Internet. Indicate units used (e.g. Hz, kHz or MHz). Note that the occupied bandwidth (block 12e) is defined as the width of the frequency bandwidth such that, below its lower and above its upper limits, the mean power radiated is each equal to 0.5% of the total mean power radiated.

Partie 2, Bloc 12 : Largeur de bande de l’émission

Indiquer les largeurs de bandes d’émissions pour lesquelles l’émetteur est conçu aux niveaux de -3, -20 et -60 dB et la largeur de bande occupée. Pour les émetteurs radars à impulsions, la largeur de bande de -40 dB doit aussi être indiquée. La largeur de bande d’émission est définie comme étant la largeur de bande apparaissant aux bornes de l’antenne et comprend toute atténuation concrète contribuée par le filtrage des circuits de sortie ou des lignes de transmission. Les valeurs des largeurs de bandes d’émission spécifiées doivent être indiquées telles qu’elles sont calculées ou mesurées en cochant la case appropriée. Si les valeurs sont calculées, les méthodes utilisées doivent être conformes aux indications de la Circulaire de la réglementation des télécommunications 43 (CRT 43) d’Industrie Canada disponibles sur l’Internet. Indiquer les unités utilisées (par exemple, Hz, kHz ou MHz). Remarquer que la largeur de bande occupée (bloc 12e) est définie comme étant la largeur de la bande de fréquence telle que, sous sa limite inférieure et au-dessus de sa limite supérieure, la puissance moyenne rayonnée de chacune est égale à 0.5 % de la puissance moyenne rayonnée totale.

Part 2, Block 13: Maximum Bit Rate

Enter the maximum information bit rate for digital equipment, in bits per second (bps). If spread spectrum is used, enter the bit rate after encoding.

Partie 2, Bloc 13 : Débit binaire maximal

Indiquer le débit binaire maximal en bits par seconde (bps) pour l’équipement numérique. Indiquer le débit binaire après le codage si l’étalement du spectre est utilisé.

Part 2, Block 14: Modulation Techniques and Coding

Describe in detail the modulation and coding techniques employed. For complex modulation schemes, such as direct sequence spread spectrum, frequency hopping or frequency agile, provide information relating to the hop rate, processing gain, clock rate, pre-defined hop sets and frequencies, minimum required number of frequencies per hop set, notching capability, etc. If too lengthy, use Remarks (Part 2, block 24).

Partie 2, Bloc 14 : Techniques de modulation et de codage

Décrire en détail les techniques de modulation et de codage utilisées. Dans le cas des formules complexes de modulation, telles que l’étalement du spectre en ordre direct, à sauts de fréquence ou à agilité de fréquence, fournir de l’information se rapportant aux taux de sauts, aux gains de traitement, à la fréquence d’horloge, aux ensembles de sauts et de fréquences prédéfinis, au nombre minimal nécessaire de fréquences par ensemble de sauts, à la capacité d’absorption, etc. Utiliser le bloc Remarques (partie 2, bloc 24) si le contenu est trop long.

Part 2, Block 15: Maximum Modulation Frequency

Enter the maximum modulation or baseband frequency for a frequency or phase-modulated transmitter. This is assumed to be the frequency at the -3 dB point on the high frequency side of the modulator response curve. Indicate the units (e.g. Hz, kHz or MHz).

Part 2, Block 16: Pre-emphasis

For frequency or phase-modulated transmitters, check the appropriate box to indicate whether pre-emphasis is available.

Part 2, Block 17: Deviation Ratio

For frequency or phase modulated transmitters, enter the deviation ratio, computed as follows:

$$\text{Deviation Ratio} = \frac{\text{Maximum Frequency Deviation}}{\text{Maximum Modulation Frequency}}$$

Part 2, Block 18: Pulse Characteristics

For pulse modulated transmitters:

a. enter the pulse repetition rate, in pulses per second (pps);

b. enter the pulse width at the half voltage levels, in microseconds (µsec);

c. enter the pulse rise time, in microseconds (µsec). This is the time required for the leading edge of the voltage pulse to rise from 10% to 90% of its peak amplitude;

d. enter the pulse fall time, in microseconds (µsec). This is the time required for the trailing edge of the voltage pulse to fall from 90% to 10% of its peak amplitude; and

e. enter the maximum pulse compression ratio, if applicable.

For coded pulse waveforms refer to instructions for Modulation (Part 2, block 14).

Partie 2, Bloc 15 : Fréquence maximale de modulation

Indiquer la fréquence maximale de modulation ou de bande de base pour un émetteur modulé en fréquence ou en phase. Il est tenu pour acquis qu'il s'agit de la fréquence au point de -3 dB du côté haute fréquence de la courbe de réponse du modulateur. Indiquer les unités (par exemple, Hz, kHz ou MHz).

Partie 2, Bloc 16 : Préaccentuation

Cocher la case appropriée pour indiquer si la préaccentuation est disponible dans le cas des émetteurs modulés en fréquence ou en phase.

Partie 2, Bloc 17 : Rapport de déviation

Indiquer le rapport de déviation calculé de la façon suivante dans le cas des émetteurs modulés en fréquence ou en phase :

$$\text{Rapport de déviation} = \frac{\text{Déviation maximale de la fréquence}}{\text{Fréquence maximale de modulation}}$$

Partie 2, Bloc 18 : Caractéristiques des impulsions

Pour les émetteurs modulés par impulsions :

a. indiquer la fréquence de récurrence d'impulsions en impulsions par seconde (pps);

b. indiquer la largeur d'impulsions aux niveaux de demi-tension en microsecondes (µsec);

c. indiquer le temps de montée de l'impulsion en microsecondes (µsec); C'est le temps nécessaire au flanc avant de l'impulsion de tension pour monter de 10 % à 90 % de son amplitude de crête;

d. indiquer le temps de descente de l'impulsion en microsecondes (µsec); C'est le temps nécessaire au flanc arrière de l'impulsion de tension pour descendre de 90% à 10% de son amplitude de crête; et

e. indiquer le rapport maximal de compression de l'impulsion s'il s'applique.

Se reporter aux instructions pour remplir le bloc Modulation (partie 2, bloc 14) s'il s'agit de formes d'ondes d'impulsions codées.

Part 2, Block 19: Power

Enter the mean power delivered to the antenna terminals for all AM and FM emissions, or the peak envelope power (PEP) for all other classes of emissions. If there are any unique situations, such as interrupted CW, provide details in Remarks (Part 2, block 24). Indicate the units (e.g. W or kW).

Part 2, Block 20: Output Device

Enter a description of the device used in the transmitter output stage (e.g. ceramic diode, reflex klystron, transistor or TWT).

Part 2, Block 21: Harmonic Level

Enter the harmonic level of the second and third harmonics, in dB, relative to the fundamental. Enter in “other” (block 21[c]) the relative level, in dB, of the highest power harmonic above the third.

Part 2, Block 22: Spurious Level

Enter the maximum value of spurious emission, in dB, relative to the fundamental, which occurs outside the -60 dB point on the transmitter fundamental emission spectrum (Part 2, block 12) and does not occur on a harmonic of the fundamental frequency. Indicate, in kHz or MHz, the location of the spurious emission from the fundamental frequency.

Part 2, Block 23: Industry Canada Type Approval No.

Enter the Industry Canada type approval number, if applicable.

Part 2, Block 24: Remarks

Self-explanatory. Use additional pages if necessary.

Partie 2, Bloc 19 : Puissance

Indiquer la puissance moyenne alimentée aux bornes de l’antenne pour toutes les émissions AM et FM, ou la puissance en crête de modulation pour toutes les autres classes d’émissions. Donner les détails dans le bloc Remarques (partie 2, bloc 24) s’il y a des situations uniques telles que des CW interrompues. Indiquer les unités (par exemple, W ou kW).

Partie 2, Bloc 20 : Dispositif de sortie

Entrer une description du dispositif utilisé à l’étage de sortie de l’émetteur (par exemple, diode céramique, klystron réflex, transistor ou TOP).

Partie 2, Bloc 21 : Niveau des harmoniques

Indiquer, en dB, le niveau des harmoniques de la deuxième et de la troisième harmonique par rapport à la fréquence fondamentale. Indiquer sous « Autre » (bloc 21[c]) le niveau de puissance relatif, en dB, des plus hautes harmoniques au-dessus de la troisième.

Partie 2, Bloc 22 : Niveau du rayonnement non essentiel

Indiquer la valeur maximale du rayonnement non essentiel, en dB, relativement à la fréquence fondamentale, qui se produit à l’extérieur du point de -60 dB sur le spectre d’émission fondamentale de l’émetteur (partie 2, bloc 12) et qui ne se produit pas sur une harmonique de la fréquence fondamentale. Indiquer, en kHz ou en MHz, l’emplacement du rayonnement non essentiel de la fréquence fondamentale.

Partie 2, Bloc 23 : N° du type approuvé d’Industrie Canada

Indiquer, s’il y a lieu, le numéro du type approuvé d’Industrie Canada.

Partie 2, Bloc 24 : Remarques

Suffisamment explicite. Utiliser au besoin des pages supplémentaires.

PART 3: RECEIVER EQUIPMENT CHARACTERISTICS

Part 3, Block 1: Nomenclature, Manufacturer's Model No.

Enter the Government assigned alphanumeric equipment designation. If not available, enter the manufacturer's model number (e.g. MIT 502) and complete Manufacturer's Name (Part 3, block 2). If this too is not available, enter a short descriptive title (e.g. GPS Receiver). A separate receiver submission is required for each receiver in a complex system (e.g. radar ECCM receivers).

Part 3, Block 2: Manufacturer's Name

Enter the manufacturer's name, if available. If a manufacturer's model number is listed in Nomenclature (Part 3, block 1), this block must be completed.

Part 3, Block 3: Receiver Installation

List specific types of vehicles, ships, planes or buildings, etc., where the receivers will be installed.

Part 3, Block 4: Receiver Type

Enter the generic class (e.g. Dual Conversion Superheterodyne or Homodyne).

Part 3, Block 5: Tuning Range

Enter the frequency range through which the receiver is capable of being tuned (e.g. 225 to 400 MHz). For equipment designed to operate only at a single frequency, enter that frequency. Include units (e.g. kHz, MHz or GHz).

Part 3, Block 6: Method of Tuning

Enter the method of tuning (e.g. crystal, synthesizer or cavity). If the equipment is not readily tuneable in the field, indicate in Remarks (Part 3, block 21) the complexity of tuning. Include complexity factors such as skill levels involved, major assemblies involved, time required, and location (factory or depot) where equipment is to be tuned.

PARTIE 3 : CARACTÉRISTIQUES DE L'ÉQUIPEMENT RÉCEPTEUR

Partie 3, Bloc 1 : Désignation, n° de modèle du fabricant

Indiquer la désignation alphanumérique de l'équipement désigné par le gouvernement. S'il n'est pas disponible, indiquer le numéro du modèle du fabricant (par exemple, MIT 502) et indiquer le nom du fabricant (partie 3, bloc 2). Si ces renseignements ne sont également pas disponibles, indiquer un court titre descriptif (par exemple, récepteur GPS). Une soumission de récepteur distincte est nécessaire pour chaque récepteur d'un système complexe (par exemple, récepteurs radars de CCME).

Partie 3, Bloc 2 : Nom du fabricant

Indiquer le nom du fabricant s'il est disponible. Si le numéro du modèle du fabricant est indiqué à la partie 3, bloc 1, ce bloc doit être rempli.

Partie 3, Bloc 3 : Installation réceptrice

Indiquer les types spécifiques de véhicules, de navires, d'aéronefs ou de bâtiments, etc., où les récepteurs seront installés.

Partie 3, Bloc 4 : Type de récepteur

Indiquer la classe générique (par exemple, superhétérodyne à double changement de fréquence ou homodyne).

Partie 3, Bloc 5 : Gamme d'accord

Indiquer la gamme de fréquences sur laquelle le récepteur peut être accordé (par exemple, de 225 à 400 MHz). Indiquer la fréquence dans le cas de l'équipement conçu pour fonctionner seulement à une seule fréquence. Indiquer les unités (par exemple, kHz, MHz ou GHz).

Partie 3, Bloc 6 : Méthode d'accord

Indiquer la méthode d'accord (par exemple, quartz, synthétiseur ou cavité). Si l'équipement ne peut être accordé facilement sur le terrain, indiquer dans le bloc Remarques (partie 3, bloc 21) la complexité de l'accord. Inclure les facteurs de complexité tels que les niveaux de compétence nécessaires, les ensembles principaux nécessaires, le

Part 3, Block 7: RF Channelling Capability

Describe the RF channelling capability:

a. for uniformly spaced channels, enter the centre frequency of the first channel and the channel spacing (e.g. first channel 406 MHz, 100 kHz increments);

b. for continuous tuning, enter the lowest frequency and the word “continuous”; and

c. for others, including cases where channel selection is under software control, enter a detailed description in Remarks (Part 3, block 21).

Part 3, Block 8: Emission Designators

Enter the emission designators, including the necessary bandwidth, for each designator, in accordance with Appendix D3 to this publication (e.g. 16K0F3E). For systems with a frequency hopping mode as well as a non-hopping mode, enter the emission designators for each mode. Identify each mode as hopping or non-hopping.

Part 3, Block 9: Frequency Tolerance

Enter the frequency tolerance (i.e., the maximum departure of a receiver from its assigned frequency after normal warm-up). Indicate the magnitude, in ppm, for all emission types except single sideband, which must be indicated in Hertz (Hz).

Part 3, Block 10: IF Selectivity

Enter the bandwidth for each IF stage at the -3, -20 and -60 dB levels. Indicate units (e.g. kHz or MHz).

Part 3, Block 11: RF Selectivity

Enter the bandwidth at the -3, -20 and -60 dB levels. The RF bandwidth includes any significant attenuation contributed by filtering in the input circuit or transmission line. Values of RF bandwidth specified

temps nécessaire et l’emplacement (usine ou dépôt) où l’équipement doit être accordé.

Partie 3, Bloc 7 : Répartition des canaux RF

Décrire la répartition des canaux RF :

a. pour indiquer la fréquence centrale du premier canal et l’espacement des canaux (par exemple, premier canal à 406 MHz avec incréments de 100 kHz) dans le cas des canaux uniformément espacés;

b. pour indiquer la plus basse fréquence et le mot « continu » dans le cas de l’accord continu;

c. pour les autres, y compris les cas où la sélection du canal est commandée par logiciel, entrer une description détaillée dans le bloc Remarques (partie 3, bloc 21).

Partie 3, Bloc 8 : Identificateur(s) d’émission

Indiquer le ou les identificateurs d’émission, y compris la largeur de bande nécessaire pour chaque identificateur conformément au contenu de l’appendice D3 de la présente publication (par exemple, 16K0F3E). Entrer les identificateurs d’émission de chaque mode dans le cas des systèmes avec un mode à sauts de fréquence ainsi que ceux avec un mode sans sauts de fréquence. Identifier chaque mode comme étant à sauts ou sans saut.

Partie 3, Bloc 9 : Tolérance de fréquence

Indiquer la tolérance de fréquence (c’est-à-dire, l’écart maximal d’un récepteur de sa fréquence assignée après le temps de réchauffement normal). Indiquer la magnitude en ppm pour tous les types d’émissions sauf la bande latérale unique, qui doit être indiquée en hertz (Hz).

Partie 3, Bloc 10 : Sélectivité FI

Indiquer la largeur de bande pour chaque étage FI aux niveaux de -3, -20 et -60 dB. Indiquer les unités (par exemple, kHz ou MHz).

Partie 3, Bloc 11 : Sélectivité RF

Indiquer la largeur de bande aux niveaux de -3, -20 et -60 dB. La largeur de bande RF comprend toute atténuation concrète contribuée par le filtrage dans le circuit d’entrée ou dans la ligne de transmission. Les

should be indicated as calculated or measured by checking the appropriate box. Indicate units (e.g. kHz or MHz). Enter the preselection type (e.g. tuneable cavity).

Part 3, Block 12: IF Frequency

Enter the tuned frequency of the first, second and third IF stages. Indicate units (e.g. kHz or MHz).

Part 3, Block 13: DIMTPS 5 Use Only

Intentionally left blank to match the US form.

Part 3, Block 14: DIMTPS 5 Use Only

Intentionally left blank to match the US form.

Part 3, Block 15: Oscillator Tuned

Check the appropriate box to indicate the location of the first, second and third oscillator frequencies with respect to the associated mixer input signal.

Part 3, Block 16: Maximum Bit Rate

Where applicable, enter the maximum bit rate (bps) that can be used. If spread spectrum is used, enter the bit rate after decoding. Describe any error detecting/correcting codes under Remarks (Part 3, block 21).

Part 3, Block 17: Sensitivity

Complete as follows:

a. enter the sensitivity in dBm;

b. specify criteria used (e.g. 12 dB SINAD, where SINAD is (Signal + Noise + Distortion) /(Noise + Distortion);

c. if the receiver is used with terrestrial systems, enter the receiver noise figure in dB; and

d. if the receiver is used with space or satellite earth stations, enter the receiver noise figure

valeurs de la largeur de bandes RF spécifiées doivent être indiquées telles qu'elles sont calculées ou mesurées en cochant la case appropriée. Indiquer les unités (par exemple, kHz ou MHz). Indiquer le type de présélection (par exemple, cavité accordable).

Partie 3, Bloc 12 : Fréquence FI

Indiquer la fréquence accordée du premier, du deuxième et du troisième étage FI. Indiquer les unités (par exemple, kHz ou MHz).

Partie 3, Bloc 13 : À l'usage exclusif du DTPSGI 5

Bloc laissé intentionnellement vide pour s'apparier au formulaire américain.

Partie 3, Bloc 14 : À l'usage exclusif du DTPSGI 5

Bloc laissé intentionnellement vide pour s'apparier au formulaire américain.

Partie 3, Bloc 15 : Oscillateur accordé

Cocher la case appropriée pour indiquer la valeur de la première, de la deuxième et de la troisième fréquence de l'oscillateur par rapport au signal d'entrée du mélangeur connexe.

Partie 3, Bloc 16 : Débit binaire maximal

S'il y a lieu, indiquer le débit binaire maximal (bps) qui peut être utilisé. Indiquer le débit binaire après le décodage si le spectre étalé est utilisé. Décrire tout code de détection ou de correction sous Remarques (partie 3, bloc 21).

Partie 3, Bloc 17 : Sensibilité

Remplir de la façon suivante :

a. indiquer la sensibilité en dBm;

b. spécifier le critère utilisé (par exemple, SINAD de 12 dB, SINAD étant (signal + bruit + distorsion)/(bruit + distorsion);

c. indiquer la valeur de bruit du récepteur en dB si le récepteur est utilisé avec les systèmes terrestres; et

d. indiquer la valeur de bruit du récepteur en degrés Kelvin si le récepteur est utilisé avec

in Kelvin.

Part 3, Block 18: De-emphasis

For frequency or phase-modulated receivers, indicate whether de-emphasis is available.

Part 3, Block 19: Image Rejection

Enter the image rejection in dB. Image ejection is the ratio of the image frequency signal level required to produce a specified output to the desired signal level required to produce the same output.

Part 3, Block 20: Spurious Frequency Rejection

Enter the spurious frequency rejection in dB. Enter the single level of spurious frequency rejection that the receiver meets or exceeds at all frequencies outside the -60 dB IF bandwidth. Spurious frequency rejection is the ratio of a particular out-of-band frequency signal level required to produce a specified output, to the desired signal level required to produce the same output.

Part 3, Block 21: Remarks

Self-explanatory. Use additional pages if necessary.

Part 3, Block 22: Industry Canada Type Approval No.

Enter the Industry Canada type approval number, if applicable.

les stations satellites spatiales ou terrestres.

Partie 3, Bloc 18 : Désaccentuation

Cocher la case appropriée pour indiquer si la désaccentuation est disponible dans le cas des récepteurs modulés en fréquence ou en phase.

Partie 3, Bloc 19 : Rejet de fréquence image

Indiquer le rejet de fréquence image en dB. Le rejet de fréquence image est le rapport du niveau signal de fréquence image nécessaire pour produire une sortie spécifiée au niveau désiré de signal nécessaire pour produire la même sortie.

Partie 3, Bloc 20 : Rejet des fréquences non essentielles

Indiquer le rejet des fréquences non essentielles en dB. Indiquer le niveau unique du rejet des fréquences non essentielles que le récepteur rencontre ou dépasse à toutes les fréquences à l’extérieur de la largeur de bande FI de -60 dB. Le rejet de fréquences non essentielles est le rapport d’un niveau de signal de fréquence hors bande nécessaire pour produire une sortie spécifiée au niveau de signal désiré nécessaire pour produire la même sortie.

Partie 3, Bloc 21 : Remarques

Suffisamment explicite. Utiliser au besoin des pages supplémentaires.

Partie 3, Bloc 22 : N° du type approuvé d’Industrie Canada

Indiquer, s’il y a lieu, le numéro du type approuvé d’Industrie Canada.

PART 4: ANTENNA EQUIPMENT CHARACTERISTICS

Part 4, Block 1: Antenna Type

Check the appropriate box to indicate the type of antenna. For multiantenna systems use a separate Part 4 form for each antenna.

Part 4, Block 2: Nomenclature, Manufacturer's Model No.

Enter the Government assigned alphanumeric equipment designation. If not available, enter the manufacturer's model number (e.g. DS6558) and indicate Manufacturer's Name (Part 4, block 3). If this too is not available, enter a short descriptive title (e.g. ATS-6 Telemetry Antenna).

Part 4, Block 3: Manufacturer's Name

Enter the manufacturer's name, if available. If a manufacturer's model number is given in Nomenclature (Part 4, block 2), this block must be completed.

Part 4, Block 4: Frequency Range

Enter the range of frequencies for which the antenna is designed. Indicate units (e.g. kHz or MHz).

Part 4, Block 5: Type

Enter the generic name or describe the general technical features (e.g. Horizontal, Log Periodic, Cassegrain with Polarization Twisting, Whip, Phased Array or Conformal Array). To the extent possible, use the standard antenna configuration given in Appendix D1, Figure D1-1.

Part 4, Block 6: Polarization

Enter the polarization. If circular, indicate whether it is left or right handed.

Part 4, Block 7: Scan Characteristics

Complete as follows:

PARTIE 4 : CARACTÉRISTIQUES DE L'ÉQUIPEMENT D'ANTENNE

Partie 4, Bloc 1 : Type d'antenne

Cocher la case appropriée pour indiquer le type d'antenne. Utiliser un formulaire distinct pour chaque antenne dans le cas des systèmes à plusieurs antennes.

Partie 4, Bloc 2 : Désignation, n° de modèle du fabricant

Indiquer la désignation alphanumérique de l'équipement désigné par le gouvernement. S'il n'est pas disponible, indiquer le numéro du modèle du fabricant (par exemple, DS6558) et indiquer le nom du fabricant (partie 4, bloc 3). Si ces renseignements ne sont pas non plus disponibles, indiquer un court titre descriptif (par exemple, antenne de télémétrie ATS-6).

Partie 4, Bloc 3 : Nom du fabricant

Indiquer le nom du fabricant s'il est disponible. Si le numéro du modèle du fabricant est indiqué à la partie 4, bloc 2, ce bloc doit être rempli.

Partie 4, Bloc 4 : Gamme de fréquences

Indiquer la gamme de fréquences pour laquelle l'antenne est conçue. Indiquer les unités (par exemple, kHz ou MHz).

Partie 4, Bloc 5 : Type

Indiquer le nom générique ou décrire les caractéristiques techniques générales (par exemple, horizontale, log-périodique, Cassegrain avec torsion de polarisation, fouet, réseau à commande de phase ou réseau conforme). Utiliser, dans la mesure du possible, les configurations normalisées d'antenne indiquées à l'appendice D1, figure D1-1.

Partie 4, Bloc 6 : Polarisation

Indiquer la polarisation. Si elle est circulaire, indiquer si elle est orientée à gauche ou à droite.

Partie 4, Bloc 7 : Caractéristiques de balayage

Remplir de la façon suivante :

a. If the antenna scans, enter the type of scanning (e.g. vertical, horizontal, vertical and horizontal);

b. Vertical Scan:

(1) enter the maximum elevation angle, in degrees (positive or negative, referenced to the horizontal), that the antenna can scan;

(2) enter the minimum elevation angle, in degrees (positive or negative, referenced to the horizontal), that the antenna can scan; and

(3) enter the vertical scanning rate, in scans per minute.

c. Horizontal Scan:

(1) enter the angular scanning range, in degrees, of the horizontal sector scanned; and

(2) enter the horizontal scan rate, in scans per minute.

d. Indicate if antenna is capable of being sector blanked. If “yes”, enter details in Remarks (Part 4, block 10b.).

Part 4, Block 8: Gain

If frequency is between 27.5 MHz and 890 MHz, indicate gain of radiator relative to half wave dipole (dB). If frequency is below 27.5 MHz or above 890 MHz, indicate gain of radiator relative to an isotropic radiator (dBi).

a. enter the maximum gain, in dB; and

b. enter the nominal gain of the first major side lobe, in dB, and the angular displacement from the main beam, in degrees.

Part 4, Block 9: Beamwidth

Enter the 3 dB beam width in degrees.

a. Indiquer le type de balayage (par exemple, vertical, horizontal, vertical et horizontal) si l’antenne balaye;

b. Balayage vertical :

(1) indiquer l’angle de site maximal en degrés (positif ou négatif, par rapport à l’horizontal) auquel l’antenne peut balayer;

(2) indiquer l’angle minimal d’élévation en degrés (positif ou négatif, par rapport à l’horizontal) auquel l’antenne peut balayer; et

(3) indiquer la cadence de balayage vertical en balayages par minute.

c. Balayage horizontal :

(1) indiquer la portée angulaire de balayage, en degrés, du secteur horizontal balayé; et

(2) indiquer la cadence de balayage horizontal en balayages par minute.

d. Indiquer si l’antenne est dotée de l’effacement de secteur. Entrer les détails sous Remarques (partie 4, bloc 10b.) si la case « Oui » est cochée.

Partie 4, Bloc 8 : Gain

Indiquer le gain de l’antenne active par rapport à l’antenne de type doublet demi-onde (en dB) si la fréquence est entre 27.5 MHz et 890 MHz. Indiquer le gain de l’antenne active par rapport à une antenne isotrope (en dB) si la fréquence est au dessous de 27.5 MHz ou au-dessus de 890 MHz.

a. indiquer le gain maximal en dB; et

b. indiquer le gain nominal du premier lobe latéral principal en dB et le déplacement angulaire à partir du faisceau principal en degrés.

Partie 4, Bloc 9 : Largeur du faisceau

Indiquer la largeur du faisceau à 3 dB en degrés.

Part 4, Block 10: Remarks

Describe any unusual characteristics of the antenna, particularly as they relate to the assessment of electromagnetic compatibility and to amplify or clarify any of the information provided above. Use additional pages if necessary. In addition, enter the following information, if applicable:

a. the front-back ratio, in dB, for directional antennas used in radio relay circuits;

b. for phased array antennas enter:

(1) mode of operation, single or multiple beam;

(2) single beam parameters; and

(3) multiple beam parameters:

a) polarization of each beam;

b) gain of each beam;

c) beam width of each beam; and

d) scan characteristics of each beam (Part 4, block 7).

Partie 4, Bloc 10 : Remarques

Se servir de ce bloc pour décrire toute caractéristique extraordinaire de l'antenne, particulièrement dans le contexte de l'évaluation de la compatibilité électromagnétique et pour amplifier ou clarifier toute information donnée ci-dessus. Utiliser au besoin des pages supplémentaires. De plus, entrer au besoin l'information suivante :

a. le rapport avant-arrière, en dB, pour les antennes directionnelles utilisées dans les circuits de relais radio;

b. indiquer, dans le cas des antennes à commande de phase :

(1) le mode de fonctionnement, à faisceau simple ou multiple;

(2) les paramètres de faisceau simple; et

(3) les paramètres de faisceau multiple :

a) la polarisation de chaque faisceau;

b) le gain de chaque faisceau;

c) la largeur de faisceau de chaque faisceau; et

d) les caractéristiques de chaque faisceau (partie 4, bloc 7 de la ci dessus).

A3.8 DID – Operator Manual

DATA ITEM DESCRIPTION	
1. TITLE **Operator Manual**	2. IDENTIFICATION NUMBER **DID MUGVS-ILS-202**
3. DESCRIPTION The Operator Manual contains all the essential information required to describe the safe and correct operative procedures and operator maintenance associated with the equipment.	
4. RELATED DOCUMENTS **C-01-100-100/AG-008** *Writer's Guide for Technical Documentation*	5. CONTRACT REFERENCE **SOW**: **Para. 4.4.1.1.1 (pg. 11)** **CDRL: App. A2.2 (pg. 32)**

6 PREPARATION INSTRUCTIONS

6.1 **CONTENT**

6.1.1 The Operator Manual must cover the following topics, and others judged pertinent by the Contractor:

6.1.1.1 General Description/Equipment Overview;

6.1.1.2 Pre-use testing/inspection;

6.1.1.3 Preparation and set up for use;

6.1.1.4 Use and operation, including operation under emergency, adverse, or abnormal conditions, when applicable;

6.1.1.5 Operator Maintenance, IAW the Maintenance Concept para 4.1 (pg. 10);

6.1.1.6 Shut-down and post-shut-down actions and precautions;

6.1.1.7 Preparation for equipment transit by air, land, and sea;

6.1.1.8 Safety/Hazardous material issues;

6.1.2 The Operator Manual material covered in 6.1.1 above, must be amplified by colour illustrations, line drawings, and good quality colour pictures.

6.2 **GENERAL FORMAT**

6.2.1 The Operator Manual must be prepared in the Contractor's format while being in full conformance with the above-stated issue of C-01-100-100/AG-008.

6.2.2 The Operator Manual must include the National Defence Index of Documentation (NDID) number (provided to the Contractor by DND) that must be placed on the top right corner of all the pages of the manual.

6.3 **HARD COPY FORMAT**

6.3.1 The accepted Operator Manual hard copies must be:

6.3.1.1 Printed on paper with these characteristics:

6.3.1.1.1 Standard US Letter Size (270 mm x 216 mm)

6.3.1.1.2 Covers: 290-370 g/m^2 polyester film (such as Pico Film), matt surface and white colour

6.3.1.1.3 Pages: 120-170 g/m^2 polyester film (such as Pico Film), matt surface and white colour

6.3.1.2 Bound with white or black spiral coil (PLASTIKOIL®)

6.4 **SOFT COPY FORMAT**

6.4.1 The Operator Manual must be provided as a PDF file with searchable text that matches the printed publication's format and layout. Links, bookmarks and thumbnails are to be included in the PDF file. All references made to a specific paragraph, figure, appendix must be appropriately linked.

6.4.2 Viewing the Operator Manual PDF: pages, regardless of size, containing text and illustrations in landscape, must be rotated for electronic viewing and reading in landscape.

6.4.3 **Soft Copy format submission size below 7MB** – The Operator Manual PDF and its native file may be submitted via email as follows:

6.4.3.1 To Field: As per the related CDRL section 9.A. Addressee, as identified in the contract.

6.4.3.2 Subject Field: MUGVS-ILS-202 – Operator Manual – [Rev #] – [Date of Issue]

6.4.4 **Soft Copy format submission size at or above 7MB** - The Operator Manual PDF and its native file must be submitted on CD or DVD media and be labelled as follows:

6.4.4.1 Mini Unmanned Ground Vehicle System

6.4.4.2 Operator Manual;

6.4.4.3 MUGVS-ILS-202;

6.4.4.4 The Revision number, and

6.4.4.5 The date of issue.

A3.9 DID – Operator Quick Reference Card

DATA ITEM DESCRIPTION	
1. TITLE **Operator Quick Reference Card**	2. IDENTIFICATION NUMBER **DID MUGVS-ILS-203**
3. DESCRIPTION Operator Quick Reference Card (OQRC) will allow the trained user to quickly unpack, assemble, and safely use the equipment.	
4. RELATED DOCUMENTS	5. CONTRACT REFERENCE **SOW**: **Para. 4.4.1.2.1 (pg. 11)** **CDRL**: **App. A2.2 (pg. 32)**

6. PREPARATION INSTRUCTIONS

6.1. **CONTENT**

6.1.1. The OQRC must contain the necessary instructions to allow a trained user to quickly, safely and effectively operate the equipment.

6.1.2. The OQRC must assume that the equipment's initial state is packed in its carrying case (see Technical Specification(s)).

6.1.3. The OQRC instructions must be based on pictograms illustrating the sequence of steps required while using only minimal text to assist in the understanding of the document. Desired look and feel would be similar to commercial airline safety pamphlets describing the use of oxygen masks, and emergency exits.

6.1.4. The OQRC must not introduce new information and procedures not also described in the Operator Manual, as the Operator Manual is the master document on how to use the equipment.

6.1.5. The OQRC cautionary advisory's heading must be determined based on the criteria set out in ANNEX A SOW para. 4.4.3.1.

6.1.6. The OQRC cautionary advisory must read as follows: "**This Operator Quick Reference Card is intended solely for experienced users who have been trained on this equipment, and have read and understood its Operator Manual** (CFTO# to be supplied by DND). **When in doubt, read the Operator Manual before operating this equipment.**"

6.1.7. The OQRC cautionary advisory must also have, immediately following this text, a brief description of the consequences of misuse of the equipment, linked to the same criteria listed in 6.1.5 above.

6.2. **HARD COPY FORMAT**

6.2.1. The accepted OQRC hard copies must:

6.2.1.1. Be printed on paper with pages of 290-370 g/m^2 polyester film (such as Pico Film), matt surface and white colour, and bound with white or black spiral coil (PLASTIKOIL®);

6.2.1.2. Contain no more than four (4) sheets;

6.2.1.3. Be produced and printed exclusively in black and white.

6.3. **SOFT COPY FORMAT**

6.3.1. The OQRC must be provided as a PDF file with searchable text that matches the printed publication's format and layout. Links, bookmarks and thumbnails are to be included in the PDF file. All references made to a specific paragraph, figure, appendix must be appropriately linked.

6.3.2. Viewing the OQRC PDF: pages, regardless of size, containing text and illustrations in landscape, must be rotated for electronic viewing and reading in landscape.

6.3.3. **Soft Copy format submission size below 7MB** – The OQRC PDF and its native file may be submitted via email as follows:

6.3.3.1. To Field: As per the related CDRL section 9.A. Addressee, as identified in the contract.

6.3.3.2. Subject Field: MUGVS-ILS-203 – OQRC – [Rev #] – [Date of Issue]

6.3.4. **Soft Copy format submission size at or above 7MB** - The OQRC PDF and its native file must be submitted on CD or DVD media and be labelled as follows:

6.3.4.1. Mini Unmanned Ground Vehicle System

6.3.4.2. OQRC;

6.3.4.3. MUGVS-ILS-203;

6.3.4.4. The Revision number, and

6.3.4.5. The date of issue.

A3.10 **DID – Maintenance and Parts Handbook**

DATA ITEM DESCRIPTION	
1. TITLE **Maintenance and Parts Handbook**	2. IDENTIFICATION NUMBER **DID MUGVS-ILS-204**
3. DESCRIPTION The Maintenance and Parts Handbook will allow a trained technician to effectively maintain and identify parts of the system.	
4. RELATED DOCUMENTS **D-01-100-205/SF-000** *Specification for Preparation of Corrective Maintenance Instruction;* **D-01-100-204/SF-000** *Specification for Preparation of Preventive Maintenance Instructions;* **C-01-100-100/AG-008** *Writer's Guide for Technical Documentation*	5. CONTRACT REFERENCE **SOW**: **Para. 4.4.1.3.1 (pg. 11)** **CDRL**: **App. A2.2 (pg. 32)**

6 PREPARATION INSTRUCTIONS

6.1 **CONTENT**

6.1.1 **Maintenance**

6.1.1.1 The scope of the Maintenance portion of the Maintenance and Parts Handbook must cover the Technician Maintenance and repair tasks.

6.1.1.2 The maintenance topics must consist of:

6.1.1.2.1 General Description/Equipment Overview;

6.1.1.2.2 Pre-maintenance procedures to make the equipment safe;

6.1.1.2.3 Troubleshooting and testing;

6.1.1.2.4 Basic diagnosis and fault finding;

6.1.1.2.5 Adjustments, maintenance and repairs grouped IAW the Maintenance Concept para 4.1 (pg. 10), and presented IAW D-01-100-205/SF-000 and D-01-100-204/SF-000;

6.1.1.2.6 Safety/Hazardous material issues;

6.1.1.3 The maintenance material must be amplified by colour illustrations, line drawings, and good quality colour pictures.

6.1.2 **Parts Handbook**

6.1.2.1 The Maintenance and Parts Handbook must have an Illustrated Parts List section that must contain all the necessary information to positively identify and relate, to each other, all the parts of the equipment that are procurable and those involved in all maintenance tasks outlined in 6.1.1.2 above.

6.1.2.2 The Illustrated parts List must have drawings of the parts and assemblies: line drawings and exploded views in black and white only; and,

6.1.2.3 The Illustrated parts List must have corresponding table(s) containing:

6.1.2.3.1 Item Number (callout in the drawing(s));

6.1.2.3.2 Item Name;

6.1.2.3.3 Manufacturer's Part Number;

6.1.2.3.4 Manufacturer's NCAGE code;

6.1.2.3.5 Contractor's Part Number (CPN), if the Contractor is not the original Manufacturer;

6.1.2.3.6 NATO Stock Number (NSN), if known; and,

6.1.2.3.7 Quantity per Assembly (QPA).

6.2 **GENERAL FORMAT**

6.2.1 The Maintenance and Parts Handbook must be prepared in the Contractor's format and must be in full conformance with the above-stated issue of C-01-100-100/AG-008.

6.3 **HARD COPY FORMAT**

6.3.1 The accepted Maintenance and Parts Handbook hard copies must be:

6.3.1.1 Printed on paper with these characteristics:

6.3.1.1.1 Standard US Letter Size (216 mm x 270 mm)

6.3.1.1.2 Covers: 290-370 g/m2 polyester film (such as Pico Film), matt surface and white colour

6.3.1.1.3 Pages: 120-170 g/m^2 polyester film (such as Pico Film), matt surface and white colour

6.3.1.2 Bound with white or black spiral PVC coil (such as PLASTIKOIL®)

6.4 **SOFT COPY FORMAT**

6.4.1 The Maintenance and Parts Handbook must be provided as a PDF file with searchable text that matches the printed publication's format and layout.

6.4.1.1 Links, bookmarks and thumbnails are to be included in the PDF file.

6.4.1.2 All references made to a specific paragraph, figure, appendix must be appropriately linked.

6.4.1.3 Viewing the PDF version: pages, regardless of size, containing text and illustrations in landscape, must be rotated for electronic viewing and reading in landscape.

6.4.2 **Soft Copy format submission size below 7MB** – The Maintenance and Parts Handbook PDF and its native file may be submitted via email as follows:

6.4.2.1 To Field: As per the related CDRL section 9.A. Addressee, as identified in the contract.

6.4.2.2 Subject Field: MUGVS-ILS-204 – Maintenance and Parts Handbook – [Rev #] – [Date of Issue]

6.4.3 **Copy format submission size at or above 7MB** - The Maintenance and Parts Handbook PDF and its native file must be submitted on CD or DVD media and be labelled as follows:

6.4.3.1 Mini Unmanned Ground Vehicle System

6.4.3.2 Maintenance and Parts Handbook;

6.4.3.3 MUGVS-ILS-204;

6.4.3.4 The Revision number, and

6.4.3.5 The date of issue.

A3.11 **DID – Operator Training Package**

DATA ITEM DESCRIPTION	
1. TITLE **Operator Training Package**	2. IDENTIFICATION NUMBER **DID MUGVS-ILS-205**
3. DESCRIPTION The Operator Training Package will be used as the reference material during the Training Sessions, and to facilitate future lesson plan preparation on the operation, Operator maintenance and storage of the equipment.	
4. RELATED DOCUMENTS **C-01-100-100/AG-008** *Writer's Guide for Technical Documentation*	5. CONTRACT REFERENCE **SOW**: **Para. 4.4.1.4.1 (pg. 11)** **CDRL**: **App. A2.2 (pg. 32)**

6. PREPARATION INSTRUCTIONS

6.1. **CONTENT**

6.1.1. The Operator Training Package course material must include, in the order judged most appropriate by the Contractor, the following subjects:

6.1.1.1. General Description/Equipment Overview;

6.1.1.2. Pre-use testing/inspection;

6.1.1.3. Preparation and set up for use;

6.1.1.4. Use and operation, including operation under emergency, adverse, or abnormal conditions, when applicable;

6.1.1.5. Preparation for travel and handling;

6.1.1.6. Storage, preservation, exercising, and reactivation procedures;

6.1.1.7. Safety and Hazardous material issues;

6.1.1.8. Operator Troubleshooting and testing;

6.1.1.9. Basic diagnosis and fault finding; and,

6.1.1.10. Operator Maintenance IAW the Maintenance Concept para. 4.1 (pg. 10).

6.1.2. The Operator Training Package course material must be amplified by colour illustrations, line drawings, and good quality colour pictures.

6.1.3. The Operator Training Package course material subjects must be approached from the perspective of an operator familiar with UGVs and experienced in EOD scenarios.

6.1.4. The Operator Training Package course material must not present any information that cannot also be found in the Technical Publication Package documents; those documents remain the primary reference for the equipment.

6.1.5. The Operator Training Package must include a **Student Handout** that includes the course material described above.

6.1.6. The Operator Training Package must include an **Instructor Lesson Plan** that includes the course material described above, speaker's notes, and outlines the following:

6.1.6.1. Classroom's physical and functional requirements;

6.1.6.2. Field area's physical and functional requirements;

6.1.6.3. Training Session schedule, divided by course material subjects;

6.1.6.4. Instructor/Student ratio for the course material subjects;

6.1.6.5. Training materiel to be supplied by the Contractor;

6.1.6.6. Training material to be supplied by Canada.

6.2. **GENERAL FORMAT**

6.2.1. The Operator Training Package can be prepared in the Contractor's format while using C-01-100-100/AG-008 as guidance.

6.2.2. No Contractor or sub-contractor logo, name, trademark, or other wording or device that may be interpreted as advertising must appear in the publication.

6.2.3. The Operator Training Package **Student Handout** must have no more than three (3) slides per page of the course material, and have additional space and lines for note taking.

6.2.4. The Operator Training Package **Instructor Lesson Plan** must have one (1) slide per page of the course material, with the speaker's notes below it.

6.3. **HARD COPY FORMAT**

6.3.1. The Operator Training Package must be furnished in a three (3) ring binder(s) and printed on paper with these characteristics:

6.3.1.1. Weight of no less than 90 g/m^2;

6.3.1.2. Brightness of no less than 96 ISO brightness;

6.4. **SOFT COPY FORMAT**

6.4.1. The Operator Training Package soft copy format must be MS PowerPoint.

6.4.2. **Soft Copy format submission size below 7MB** – The Operator Training Package may be submitted via email as follows:

6.4.2.1. To Field: As per the related CDRL section 9.A. Addressee, as identified in the contract.

6.4.2.2. Subject Field: MUGVS-ILS-205 – Operator Training Package – [Rev #] – [Date of Issue]

6.4.3. **Soft Copy format submission size at or above 7MB** - The Operator Training Package file must be submitted on CD or DVD media and be labelled as follows:

6.4.3.1. Mini Unmanned Ground Vehicle System

6.4.3.2. Operator Training Package;

6.4.3.3. MUGVS-ILS-205;

6.4.3.4. The Revision number, and

6.4.3.5. The date of issue.

A3.12 **DID – Preservation, Storage and Reactivation Instructions**

DATA ITEM DESCRIPTION	
1. TITLE **Preservation, Storage and Reactivation Instructions**	2. IDENTIFICATION NUMBER **DID MUGVS-ILS-206**
3. DESCRIPTION The Preservation, Storage and Reactivation Instructions (PSRI) provides guidance for the storage and preservation, in-storage inspections, exercising, and reactivation of equipment.	
4. RELATED DOCUMENTS **D-01-100-211/SF-000** *Preservation, Storage and Handling Instructions* **C-01-100-100/AG-008** *Writer's Guide for Technical Documentation*	5. CONTRACT REFERENCE **SOW**: **Para. 4.4.1.5.1 (pg. 11)** **CDRL**: **App. A2.2 (pg. 32)**

6. PREPARATION INSTRUCTIONS

6.1. **CONTENT**

6.1.1. The PSRI must contain the necessary data as outlined in D-01-100-211/SF-000, *Preservation, Storage and Handling Instructions,* **omitting** Annex A Part 4 – Handling and Shipping.

6.2. **GENERAL FORMAT**

6.2.1. The PSRI must be prepared in the Contractor's format while being in full conformance with the above-stated issue of C-01-100-100/AG-008.

6.2.2. The PSRI must have the National Defence Index of Documentation (NDID) number, provided to the Contractor by DND, on the top right corner of all the pages.

6.3. **HARD COPY FORMAT**

6.3.1. The accepted PSRI hard copies must be:

6.3.1.1. Printed on paper with these characteristics:

6.3.1.1.1. Standard US Letter Size (216 mm x 270 mm)

6.3.1.1.2. Covers: 290-370 g/m^2 polyester film (such as Pico Film), matt surface and white colour

6.3.1.1.3. Pages: 120-170 g/m^2 polyester film (such as Pico Film), matt surface and white colour

6.3.1.2. Bound with white or black spiral PVC coil (such as PLASTIKOIL®)

6.4. **SOFT COPY FORMAT**

6.4.1. The PSRI must be provided as a PDF file with searchable text that matches the printed publication's format and layout. Links, bookmarks and thumbnails are to be included in the PDF file. All references made to a specific paragraph, figure, appendix must be appropriately linked.

6.4.2. Viewing the PDF version: pages, regardless of size, containing text and illustrations in landscape, must be rotated for electronic viewing and reading in landscape.

6.4.3. **Soft Copy format submission size below 7MB** – The PRSI PDF and its native file may be submitted via email as follows:

6.4.3.1. To Field: As per the related CDRL section 9.A. Addressee, as identified in the contract.

6.4.3.2. Subject Field: MUGVS-ILS-206 – PRSI – [Rev #] – [Date of Issue]

6.4.4. **Soft Copy format submission size at or above 7MB** - The PRSI PDF and its native file must be submitted on CD or DVD media and be labelled as follows:

6.4.4.1. Mini Unmanned Ground Vehicle System

6.4.4.2. PRSI;

6.4.4.3. MUGVS-ILS-206;

6.4.4.4. The Revision number, and

6.4.4.5. The date of issue.

A3.13 DID – Provisioning Parts Breakdown

DATA ITEM DESCRIPTION	
1. TITLE **Provisioning Parts Breakdown**	2. IDENTIFICATION NUMBER **DID MUGVS-ILS-207**
3. DESCRIPTION The Provisioning Parts Breakdown (PPB) is a top-down breakdown of the equipment in the configuration in which it is being procured.	
4. RELATED DOCUMENTS **D-01-100-214/SF-000** *Specification for Preparation of Provisioning Documentation for Canadian Forces Equipment*	5. CONTRACT REFERENCE **SOW**: **Para. 4.5.3.1.1 (pg. 13)** **CDRL**: **App. A2.2 (pg. 32)**

6 PREPARATION INSTRUCTIONS

6.1 **CONTENT**

6.1.1 The PPB must be prepared IAW in D-01-100-214/SF-000, with modifications listed below.

6.1.2 The following data fields must be added to the PPB:

6.1.2.1 *Quantity per End Item (QPEI):* Between Fields number 9 and 10, refers to the total number of times the item is used in the whole prime equipment (A-level). This field may contain whatever number of numeric characters needed to show the quantities.

6.1.2.2 *SPTD filename:* As the last Field, must contain the line item's applicable SPTD filename. This field may be whatever size adequate to fully show the data therein.

6.1.3 Common fasteners and hardware (items with "Y" indention code) must have an Item Name that describes their key characteristics so that equivalents can be identified from alternate sources, as possible within the mandated field size. Example: "Hex Head Screw M8 x 1.25mm, 30mm Lg, 18-8 SS".

6.1.4 For clarity:

6.1.4.1 *Original Equipment Manufacturer's Part Number* refers only to the Contractor which DND has contracted to supply the equipment; data from sub-contractors for items that they did not manufacture or do not control are not permitted. This field may be left blank if no data is available, or if it is the same as the Manufacturer's Reference Number (MRN).

6.1.4.2 *Quantity per Assembly* (QPA) refers to the number of times the item is used in the next higher assembly. For example, a C-level item's QPA will show the number of times it is used in its related B-level assembly, without being multiplied by the number of B-level assemblies.

6.1.4.3 *NATO Commercial and Government Entity* (NCAGE) Codes can be searched and requested through the NATO portal: https://eportal.nspa.nato.int/AC135Public/scage/CageList.aspx.

6.1.5 The Source Maintenance and Recoverability (SMR) Codes are used to communicate maintenance and supply instructions to the various logistic support levels and user organizations for the logistic support of systems, equipment, and end items. The PPB SMR Codes must be chosen from the following list:

SMR Field Position	Code	Application/Explanation
First and Second Position Source Codes	PA	Item procured and stocked for anticipated or known usage. Items are normally considered for replenishment
	PC	Item procured and stocked, but is deteriorative in nature.
	PF	Support equipment which will not be stocked, but which will be centrally procured on demand.
	XA	Item is not procured or stocked because the requirements for the item will result in the replacement of the next higher assembly

	XC	Installation drawing, diagram, instruction sheet, or field Service drawing, that is identified by the manufacturers' part number.
Third Position Maintenance Codes	C	Support item is removed, replaced, used by the operator/crew.
	O	Support item is removed, replaced, or used at the Technician Maintenance level.
	K	Repairable item. Item is removed, replaced, or used at contractor facility.
Fourth Position Repair Codes	C	The lowest maintenance activity capable of complete repair of the support item is the operator/crew.
	O	The lowest maintenance activity capable of complete repair of the support item is the Technician Maintenance level.
	K	Repairable support item. Complete repair capability exists at a designated contractor facility.
	Z	Non-repairable.
Fifth Position Recoverability Codes	C	Repairable item. When uneconomically repairable, condemn and disposed by the operator/crew.
	Z	Non-repairable item. When item becomes unserviceable, condemn and disposed of by authorized activity.
	O	Repairable item. When uneconomically repairable, condemn and dispose at organizational activity.
	K	Repairable item. Condemnation and disposal to be performed at contractor facility.

6.2 **GENERAL FORMAT**

6.2.1 The PPB must be prepared as an MS Excel spreadsheet, formatted IAW D-01-100-214/SF-000, taking into account the modifications listed in para 6.1.2 above.

6.3 **SOFT COPY FORMAT**

6.3.1 **Soft Copy format submission size below 7MB** – The PPB may be submitted via email as follows:

6.3.1.1 To Field: As per the related CDRL section 9.A. Addressee, as identified in the contract.

6.3.1.2 Subject Field: MUGVS-ILS-207 – PPB – [Rev #] – [Date of Issue]

6.3.2 **Soft Copy format submission size at or above 7MB** - The PPB file must be submitted on CD or DVD media and be labelled as follows:

6.3.2.1 Mini Unmanned Ground Vehicle System

6.3.2.2 Provisioning Parts Breakdown;

6.3.2.3 MUGVS-ILS-207;

6.3.2.4 The Revision number, and

6.3.2.5 The date of issue.

A3.14 DID – Supplementary Provisioning Technical Documentation

DATA ITEM DESCRIPTION	
1. TITLE **Supplementary Provisioning Technical Documentation**	2. IDENTIFICATION NUMBER **DID MUGVS-ILS-208**
3. DESCRIPTION The Supplementary Provisioning Technical Documentation (SPTD) fully identifies and describes part(s) that may be catalogued.	
4. RELATED DOCUMENTS **D-01-100-214/SF-000** *Specification for Preparation of Provisioning Documentation for Canadian Forces Equipment*	5. CONTRACT REFERENCE **SOW**: **Para. 4.5.3.2.1 (pg. 14)** **CDRL**: **App. A2.2 (pg. 32)**

6. **PREPARATION INSTRUCTIONS**

6.1. **CONTENT**

6.1.1. The Supplementary Provisioning Technical Documentation (SPTD) must be provided for each item appearing on the Provisioning Documentation, IAW D-01-100-214/SF-000.

6.1.2. The SPTD must include the technical data required for DND to classify and fully describe the item within the NATO codification system, allowing for item identification and cataloguing purposes.

6.2. **SOFT COPY FORMAT**

6.2.1. The SPTD must be submitted with filenames in the following format: (MRN)_(NCAGE)_(item name).(software extension).

6.2.2. **Soft Copy format submission size below 7MB** – The SPTD may be submitted via email as follows:

6.2.2.1. To Field: As per the related CDRL section 9.A. Addressee, as identified in the contract.

6.2.2.2. Subject Field: MUGVS-ILS-208 – SPTD – [Rev #] – [Date of Issue]

6.2.3. **Soft Copy format submission size at or above 7MB** – The SPTD must be submitted on CD or DVD media and be labelled as follows:

6.2.3.1. Mini Unmanned Ground Vehicle System

6.2.3.2. SPTD;

6.2.3.3. MUGVS-ILS-208;

6.2.3.4. The Revision number, and

6.2.3.5. The date of issue.

A3.15 **DID – Material Identification Data Set**

DATA ITEM DESCRIPTION	
1. TITLE **Material Identification Data Set**	2. IDENTIFICATION NUMBER **DID MUGVS-ILS-209**
3. DESCRIPTION To identify the data elements and format required to complete the Materiel Identification Data Set (MIDS) for each serialized item being procured. This data will be used to create the MUGVS Equipment Master Record.	
4. RELATED DOCUMENTS	5. CONTRACT REFERENCE **SOW**: **Para. 4.5.3.3.1 (pg. 14)** **CDRL**: **App. A2.2 (pg. 32)**

6. PREPARATION INSTRUCTIONS

6.1. **CONTENT**

6.1.1. The MIDS must contain the following data:

6.1.1.1. Unique Item Identification

6.1.1.1.1. Item Description (English)

6.1.1.1.2. Item Description (French)

6.1.1.1.3. Manufacturer's NCAGE

6.1.1.1.4. Manufacturer's Part Number (MPN)

6.1.1.1.5. Manufacturer's Serial Number

6.1.1.2. Parent Identification (where installed in higher level assembly):

6.1.1.2.1. Parent Manufacturer's NCAGE

6.1.1.2.2. Parent Manufacturer's Part Number (MPN)

6.1.1.2.3. Parent Manufacturer's Serial Number (if known)

6.2. **GENERAL FORMAT**

6.2.1. The MIDS must be presented in accordance with the MIDS Excel Sheet template referenced.

6.3. **SOFT COPY FORMAT**

6.3.1. The MIDS must be delivered as an Excel spreadsheet.

6.3.2. **Soft Copy format submission size below 7MB** – The MIDS may be submitted via email as follows:

6.3.2.1. To Field: As per the related CDRL section 9.A. Addressee, as identified in the contract.

6.3.2.2. Subject Field: MUGVS-ILS-209 – MIDS – [Rev #] – [Date of Issue]

6.3.3. **Soft Copy format submission size at or above 7MB** – The MIDS file must be submitted on CD or DVD media and be labelled as follows:

6.3.3.1. Mini Unmanned Ground Vehicle System

6.3.3.2. MIDS

6.3.3.3. MUGVS-ILS-209;

6.3.3.4. The Revision number, and

6.3.3.5. The date of issue.

A3.16 DID – Identification Plates – Design Template & Populated Designs

DATA ITEM DESCRIPTION	
1. TITLE **Identification Plates – Design Template & Populated Designs**	2. IDENTIFICATION NUMBER **DID MUGVS-ILS-210**
3. DESCRIPTION The Identification Plates uniquely identify equipment and components and spares based on the procedures governing the identification marking of Canadian military property.	
4. RELATED DOCUMENTS **D-02-002-001/SG-001** *Canadian Forces Standard Identification Marking of Canadian Military Property* **D-01-400-002/SF-000** *Specification - Levels of Engineering Drawings* **STANAG 2290 Ed. 2** *NATO Unique Identification of Items*	5. CONTRACT REFERENCE **SOW**: **Para. 4.7.1 (pg. 14)** **CDRL**: **App. A2.2 (pg. 32)**

6. PREPARATION INSTRUCTIONS

6.1. **CONTENT AND GENERAL FORMAT**

6.1.1. In accordance with D-02-002-001/SG-001, the Identification Plates affixed to each item included in Annex A SOW para 4.7.2 must be of size, format, and construction appropriate for the item being identified, and contain the data required for those Identification Plate formats in both official languages.

6.1.2. The Identification Plates Design Template & Populated Designs must be prepared as representative Level 2 drawings (see D-01-400-002/SF-000).

6.1.2.1. The Level 2 drawings must include the mounting or installation method for each Identification Plate, with any fasteners described by size, and/or technical standard, and/or NSN, and quantity.

6.1.3. Identification Plates for serially managed items must include a Unique Item Identifier in accordance with STANAG 2290 Ed. 2.

6.1.3.1. Identification Plates Design Template & Populated Designs must include Unique Item Identifier mark data qualifier and data elements.

6.2. **HARD COPY FORMAT**

6.2.1. The Identification Plates Design Template & Populated Designs must be:

6.2.1.1. Printed in 1:1 scale;

6.2.1.2. Printed on Standard US Ledger size paper (432 mm x 279 mm), with a:

6.2.1.2.1. Weight of no less than 90 g/m^2;

6.2.1.2.2. Brightness of no less than 96 ISO brightness;

6.3. **SOFT COPY FORMAT**

6.3.1. The Identification Plates Design Template & Populated Designs must be provided as PDF files, filename labelled in the following way: [Item Name]_[MRN].pdf.

6.3.2. The Identification Plates Design Template and Populated Designs PDFs containing text and illustrations in landscape, must be rotated for electronic viewing and reading in landscape.

6.3.3. **Soft Copy format submission size below 7MB** – The Identification Plates Design Template & Populated Designs may be submitted via email as follows:

6.3.3.1. To Field: As per the related CDRL section 9.A. Addressee, as identified in the contract.

6.3.3.2. Subject Field: MUGVS-ILS-210 – Identification Plates – [Rev #] – [Date of Issue]

6.3.4. **Soft Copy format submission size at or above 7MB** – The Identification Plates Design Template & Populated Designs file must be submitted on CD or DVD media and be labelled as follows:

6.3.4.1. Mini Unmanned Ground Vehicle System

6.3.4.2. Identification Plates

6.3.4.3. MUGVS-ILS-210;

6.3.4.4. The Revision number, and

6.3.4.5. The date of issue.

A3.17 DID – Controlled & Non-Controlled Goods List

DATA ITEM DESCRIPTION	
1. TITLE **Controlled & Non-Controlled Goods List (CNCGL)**	2. IDENTIFICATION NUMBER **DID MUGVS-ILS-211**
3. DESCRIPTION Controlled Goods Items – The CNCGL identifies if the controlled goods end items, components and sub-components of the equipment are specifically designed and modified for military purpose, and provides the Demilitarization Instructions if required. Non-Controlled Goods Items – The CNCGL still includes non-controlled goods end items, components and sub-components of the equipment, as they will still require a DMC assignment.	
4. RELATED DOCUMENTS **C-02-007-000/AG-001** *Controlled Technology Access and Transfer (CTAT) Manual*	5. CONTRACT REFERENCE **SOW**: **Para. 4.8.1 (pg. 15)** **CDRL**: **App. A2.2 (pg. 32)**

6. PREPARATION INSTRUCTIONS

6.1. **CONTENT**

6.1.1. The CNCGL must identify end items accordingly, IAW C-02-007-000/AG-001:

6.1.1.1. For Canadian origin items, Canada's Export Control List (ECL) articles that apply in accordance with the Defence Product Act (DPA);

6.1.1.2. For US origin dual use, the Export Control Classification Number (ECCN) of the Commerce Control List that applies;

6.1.1.3. For US origin controlled goods also known as defence articles, the United States Munitions List (USML) Category and paragraph that apply in accordance with the International Traffic in Arms Regulations (ITAR);

6.1.1.4. For all other countries other than Canada and the USA, the category and article of the Wassenaar Control List that applies, and

6.1.1.5. All items require a Demilitarization Code (DMC).

6.2. **GENERAL FORMAT**

6.2.1. The CNCGL must be in spreadsheet format with 6 columns:

6.2.1.1. Item name;

6.2.1.2. Manufacturer's Reference Part Number;

6.2.1.3. Ref para for Canadian origin items (ECL);

6.2.1.4. Ref para for US origin controlled goods (USML);

6.2.1.5. Demilitarization Code (DMC);

6.2.1.6. Formal Demilitarisation Instructions, if DMC is F;

6.2.1.7. Remarks.

6.3. **HARD COPY FORMAT**

6.3.1. The CNCGL must be printed on paper with these characteristics:

6.3.1.1. Weight of no less than 90 g/m^2;

6.3.1.2. Brightness of no less than 96 ISO brightness;

6.4. **SOFT COPY FORMAT**

6.4.1. The CNCGL must be provided as an MS Excel Spreadsheet file.

6.4.2. **Soft Copy format submission size below 7MB** – The CNCGL may be submitted via email as follows:

6.4.2.1. To Field: As per the related CDRL section 9.A. Addressee, as identified in the contract.

6.4.2.2. Subject Field: MUGVS-ILS-211 – CNCGL – [Rev #] – [Date of Issue]

6.4.3. **Soft Copy format submission size at or above 7MB** – The CNCGL file must be submitted on CD or DVD media and be labelled as follows:

6.4.3.1. Mini Unmanned Ground Vehicle System

6.4.3.2. CNCGL

6.4.3.3. MUGVS-ILS-211;

6.4.3.4. The Revision number, and

6.4.3.5. The date of issue.

A3.18 DID – Identification Labels for Storage & Shipment and Packaging Codes

DATA ITEM DESCRIPTION	
1. TITLE **Identification Labels for Storage & Shipment and Packaging Codes**	2. IDENTIFICATION NUMBER **DID MUGVS-ILS-212**
3. DESCRIPTION The Identification Labels for Storage & Shipment and Packaging Codes (CF271 forms) ensures that the labelling used to identify packages for items procured by DND and shipped to and stored at a Canadian facility comply with CAF specifications. As well, this will allow DND to obtain a complete record of packaging codes for catalogued items of the equipment.	
4. RELATED DOCUMENTS **D-LM-008-011/SF-001** *Preparation and Use of Packaging Requirements Codes* **D-LM-008-002/SF-001** *Specification for Marking for Storage and Shipment* **D-01-400-002/SF-000** Specification - *Levels of Engineering Drawings* **CF271** *Form (MS Excel version provided by DND after contract award)*	5. CONTRACT REFERENCE **SOW**: **Para. 4.9.3 (pg. 15)** **CDRL**: **App. A2.2 (pg. 32)**

6. PREPARATION INSTRUCTIONS

6.1. **CONTENT AND GENERAL FORMAT**

6.1.1. The Identification Labels for Storage & Shipment design, populated with the appropriate data, must be provided as Level 1 drawings (see D-01-400-002/SF-000) and include dimensions to show the measurements as defined by D-LM-008-002/SF-001 (example: text size, bar code dimensions).

6.1.2. A separate Packaging Code (CF271 Form) must be provided electronically for each item that:

6.1.2.1. Requires special packaging, packing, or preservation considerations to meet the required protection level (see 4.9.1 of the SOW), as per D-LM-008-011/SF-001 (see Table 1 below); and,

6.1.2.2. Has a NATO Stock Number (NSN).

6.1.3. The CF271 forms' file name must correspond to the item listed within, either by its part number or NSN (example: CF271 9422-01-552-8836.xls).

6.2. **HARD COPY FORMAT**

6.2.1. The Identification Labels for Storage & Shipment designs must be printed on paper with these characteristics:

6.2.1.1. Standard US Ledger size (432 mm x 279 mm)

6.2.1.2. Weight of no less than 90 g/m^2;

6.2.1.3. Brightness of no less than 96 ISO brightness;

6.3. **SOFT COPY FORMAT**

6.3.1. The Identification Labels for Storage & Shipment designs must be provided as PDF files.

6.3.2. The Identification Labels for Storage & Shipment designs PDFs containing text and illustrations in landscape, must be rotated for electronic viewing and reading in landscape.

6.3.3. The Packaging Codes (CF271 forms) must be provided as MS Excel Spreadsheet files.

6.3.4. **Soft Copy format submission size below 7MB** – The Identification Labels for Storage & Shipment and Packaging Codes may be submitted via email as follows:

6.3.4.1. To Field: As per the related CDRL section 9.A. Addressee, as identified in the contract.

6.3.4.2. Subject Field: MUGVS-ILS-212 – Identification Labels for Storage & Shipment and Packaging Codes – [Rev #] – [Date of Issue]

6.3.5. **Soft Copy format submission size at or above 7MB** – The Identification Labels for Storage & Shipment and Packaging Codes files must be submitted on CD or DVD media and be labelled as follows:

6.3.5.1. Mini Unmanned Ground Vehicle System

6.3.5.2. Identification Labels for Storage & Shipment and Packaging Codes

6.3.5.3. MUGVS-ILS-212;

6.3.5.4. The Revision number, and

6.3.5.5. The date of issue.

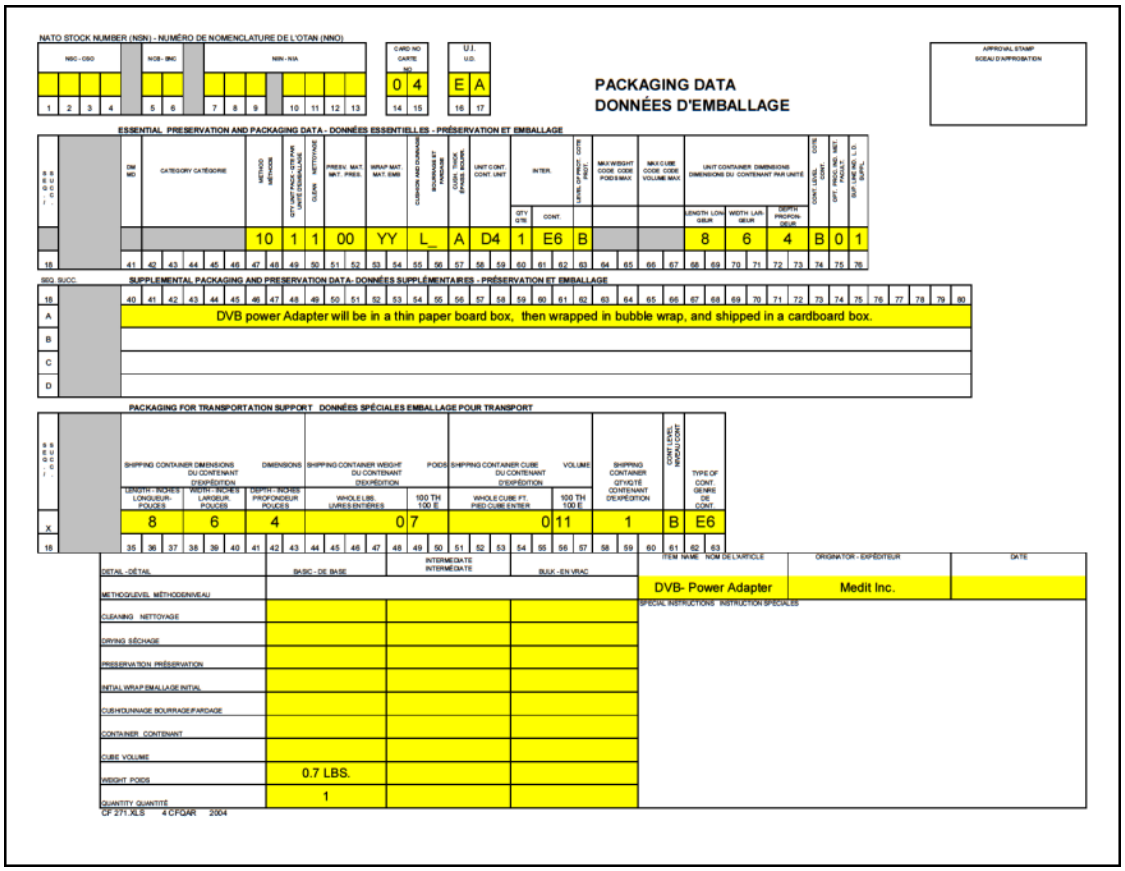

NATO STOCK NUMBER (NSN) - NUMÉRO DE NOMENCLATURE DE L'OTAN (NNO)

NSC - CSO	NCB - SNC	NIN - N/A	CARD NO CARTE NO	U.I. U.D.
			0 4	E A

PACKAGING DATA
DONNÉES D'EMBALLAGE

APPROVAL STAMP
SCEAU D'APPROBATION

ESSENTIAL PRESERVATION AND PACKAGING DATA - DONNÉES ESSENTIELLES - PRÉSERVATION ET EMBALLAGE

SEQ SUCC	DIM MD	CATEGORY CATÉGORIE	METHOD MÉTHODE	QTY UNIT PACK - QTE PAR UNITE D'EMBALLAGE	CLEAN NETTOYAGE	PRESV. MAT. MAT. PRES.	WRAP MAT. MAT. EMB	CUSHION AND DUNNAGE BOURRAGE ET FAREDAGE	CUSH. THICK. EPAISSEUR	UNIT CONT. CONT. UNIT	INTER. QTY QTE	INTER. CONT.	LEVEL OF PROT. NIVEAU	MAX WEIGHT CODE CODE POIDS MAX	MAX CUBE CODE CODE VOLUME MAX	UNIT CONTAINER DIMENSIONS DIMENSIONS DU CONTENANT PAR UNITÉ LENGTH LONGUEUR	WIDTH LARGEUR	DEPTH PROFONDEUR	CONT. LEVEL NIVEAU CONT.	QTY PACK. NO. NBRE PAQUET	SUP. LEVEL S.O. SUPPL.
			10	1	1	00	YY	L_	A	D4	1	E6	B			8	6	4	B	0	1
18	41	42 43 44 45 46	47 48	49	50	51 52	53 54	55 56	57	58 59	60	61 62	63	64 65	66 67	68 69	70 71	72 73	74	75	76

SEQ SUCC SUPPLEMENTAL PACKAGING AND PRESERVATION DATA- DONNÉES SUPPLÉMENTAIRES - PRÉSERVATION ET EMBALLAGE

18	40 41 42 43 44 45 46 47 48 49 50 51 52 53 54 55 56 57 58 59 60 61 62 63 64 65 66 67 68 69 70 71 72 73 74 75 76 77 78 79 80
A	DVB power Adapter will be in a thin paper board box, then wrapped in bubble wrap, and shipped in a cardboard box.
B	
C	
D	

PACKAGING FOR TRANSPORTATION SUPPORT DONNÉES SPÉCIALES EMBALLAGE POUR TRANSPORT

SEQ SUCC	SHIPPING CONTAINER DIMENSIONS DU CONTENANT D'EXPÉDITION LENGTH - INCHES LONGUEUR - POUCES	WIDTH - INCHES LARGEUR - POUCES	DIMENSIONS DEPTH - INCHES PROFONDEUR - POUCES	SHIPPING CONTAINER WEIGHT DU CONTENANT D'EXPÉDITION WHOLE LBS LIVRES ENTIÈRES	POIDS 100 TH 100 E	SHIPPING CONTAINER CUBE DU CONTENANT D'EXPÉDITION WHOLE CUBE FT PIED CUBE ENTIER	VOLUME 100 TH 100 E	SHIPPING CONTAINER QTY/QTÉ CONTENANT D'EXPÉDITION	CONT LEVEL NIVEAU CONT	TYPE OF CONT GENRE DE CONT
X	8	6	4	0	7	0	11	1	B	E6
18	35 36 37 38 39 40 41	42 43 44	45 46 47	48 49 50	51 52 53	54 55 56	57 58 59	60	61	62 63

DETAIL - DÉTAIL	BASIC - DE BASE	INTERMEDIATE INTERMÉDIATE	BULK - EN VRAC
METHOD/LEVEL MÉTHODE/NIVEAU			
CLEANING NETTOYAGE			
DRYING SÉCHAGE			
PRESERVATION PRÉSERVATION			
INITIAL WRAP EMBALLAGE INITIAL			
CUSH/DUNNAGE BOURRAGE/FARDAGE			
CONTAINER CONTENANT			
CUBE VOLUME			
WEIGHT POIDS	0.7 LBS.		
QUANTITY QUANTITÉ	1		

ITEM NAME NOM DE L'ARTICLE	ORIGINATOR - EXPÉDITEUR	DATE
DVB- Power Adapter	Medit Inc.	

SPECIAL INSTRUCTIONS INSTRUCTION SPECIALES

CF 271.XLS 4 CFQAR 2004

Table 1: Sample CF271 form

A3.19 **DID – List of Items to be Supported**

DATA ITEM DESCRIPTION	
1. TITLE **List of Items to be Supported**	2. IDENTIFICATION NUMBER **DID MUGVS-ILS-213**
3. DESCRIPTION The List of Items to be Supported (LIS) will provide the repairable/consumable item data and technical data, which will be supported once the system is delivered. DND will use this information, along with the provisioning data, to populate the Support SOW Appendix A1.0 tables.	
4. RELATED DOCUMENTS	5. CONTRACT REFERENCE **SOW**: **Para. 4.10.1 (pg. 16)** **CDRL**: **App. A2.2 (pg. 32)**

6. PREPARATION INSTRUCTIONS

6.1. **CONTENT**

6.1.1. The LIS must provide an overview and understanding to DND on how the MUGVS and its associated equipment will be supported once the MUGVS is delivered. Refer to the Support SOW for further information.

6.1.2. The LIS must provide the following completed tables, stemming from the Concept of Operation & Support (in accordance with the Support SOW), and in accordance with the Maintenance Concept ANNEX A paragraph 4.1 (page 10):

6.1.2.1. Supported Equipment and Spares Table – This includes the repairable equipment or components of the complete system, STTE, and consumable equipment.

6.1.2.2. Supported Technical Data Table – This includes the Technical Data and publications, and training material for which the Contractor will provide support.

6.2. **GENERAL FORMAT**

6.2.1. The LIS must be prepared as an MS Word document with tables.

6.3. **SOFT COPY FORMAT**

6.3.1. The LIS must be provided as an MS Word file.

6.3.2. **Soft Copy format submission size below 7MB** – The LIS may be submitted via email as follows:

6.3.2.1. To Field: As per the related CDRL section 9.A. Addressee, as identified in the contract.

6.3.2.2. Subject Field: MUGVS-ILS-213 – LIS – [Rev #] – [Date of Issue]

6.3.3. **Soft Copy format submission size at or above 7MB** – The LIS file must be submitted on CD or DVD media and be labelled as follows:

6.3.3.1. Mini Unmanned Ground Vehicle System

6.3.3.2. LIS

6.3.3.3. MUGVS-ILS-213;

6.3.3.4. The Revision number, and

6.3.3.5. The date of issue.

Supported Equipment and Spares Table

An explanation of each column is detailed below:

1. System Identifier MRN/OEM Part No – A unique identifier for the Item, as used in the applicable technical manuals or supply management system.

2. Item Nomenclature – The name of the Item that may include Item class/group categories and functional descriptors.
3. NATO Stock Number (NSN) – The 13-digit identifier used in NATO and allied cataloguing systems. The NSN will be included if the Item is to be ordered by DND.
4. Regular or Free-Flow R&O by Item
    a. Repair Cost Estimate (RCE) – Identifies that the item will require a cost estimate before repairs or overhaul can begin.
        i. This is used for regular R&O when equipment is more complex so the TA requires more visibility on what is being proposed, has not yet reached steady-state and is therefore harder to predict typical repair costs/requirements, and repairs occur at a low rate.
    b. Maximum Repair Cost (MRC) – Identifies the maximum amount authorized that includes all labour and material costs, to be expended to repair an item. Repairs above the MRC must be approved by DND before any repair or overhaul work commences. Standard Selection Notice Observation Message procedures as detailed in A-LM-184-001/JS-001 must apply.
        i. This is used for free-flow R&O when equipment repairs are well understood or are less complex, and are used for repairs that occur at a high rate.
5. Repair Turn-Around-Time (TAT) – Identifies the Repair TAT, if different from the general Repair TAT, as defined in Support SOW, indicating that this item is of greater importance to the operation of the MUGVS and therefore requires a faster turn-around. Repair TAT is indicated in calendar days; if left blank, then general Repair TAT is followed.

NOTE: INFORMATION IN THIS TABLE WILL BE FINALIZED AFTER DELIVERY AND ACCEPTANCE OF THE PROVISIONING DOCUMENTATION.

Item Identifier MRN/OEM Part No. (1)	Item Nomenclature (2)	NSN (if item can be ordered) (3)	Regular or Free-Flow RCE/MRC (4)	Repair TAT (cal. Days) (5)

Supported Technical Data Table

An explanation of each column is detailed below:

1. Publication Number – The unique identifier for the published Item of Technical Data.

2. Title – The title of the item of Technical Data.

NOTE: INFORMATION IN THIS TABLE WILL BE FINALIZED AFTER DELIVERY AND ACCEPTANCE OF THE TECHNICAL PUBLICATIONS.

Publication Identifier (1)	Title (2)

A3.20 **DID – Equipment Environmental Assessment**

DATA ITEM DESCRIPTION	
1. TITLE **Equipment Environmental Assessment (EEA)**	2. IDENTIFICATION NUMBER **DID MUGVS-ILS-214**
3. DESCRIPTION The EEA identifies and documents potential environmental impacts of the equipment over the entire life-cycle and the associated mitigation measures required to reduce or eliminate them.	
4. RELATED DOCUMENTS	5. CONTRACT REFERENCE **SOW**: **Para. 5.4.1 (pg. 18)** **CDRL**: **App. A2.2 (pg. 32)**

6. PREPARATION INSTRUCTIONS

6.1. **CONTENT**

6.1.1. **Title Page**

6.1.1.1. Equipment Name and NSN (if available).

6.1.1.2. Assessment Contact: Name, title and company name of the author of the EEA.

6.1.2. **Executive Summary**

6.1.2.1. Provide a brief summary of potential environmental impacts and recommended mitigation measures for each life-cycle (test and evaluation following production, operation and maintenance, and demilitarization and disposal).

6.1.3. **Equipment Description**

6.1.3.1. Equipment description: Provide an overview of the equipment and identify each major sub-system as per the Equipment Breakdown Structure.

6.1.3.2. For each major sub-system, identify the following:

6.1.3.2.1. Hazardous substances that are incorporated into the equipment. Provide additional information in tabular form in Table 1.

6.1.3.2.2. Chemical products listed in Table 1.

6.1.3.2.3. Ionizing radiation sources (radioisotopes and x-ray). e.g. Uranium, Radon, plutonium and tritium etc. in Table 2.

6.1.3.2.4. Non-ionizing radiation sources (radiofrequency and lasers) in Table 2.

6.1.3.3. Provide Safety Data Sheets (SDS) that are less than three years old for all chemical products in accordance with WHMIS 2015 requirements in Annex A for all chemical products.

6.1.4. **Environmental Assessment**

6.1.4.1. For each lifecycle phase (test and evaluation following production, operation and maintenance, and demilitarization and disposal) discuss the following:

6.1.4.1.1. Lifecycle activities: Describe anticipated activities (including operator and maintenance tasks that are detailed in Contractor provided Technical Documentation) and identify if any of these activities have the potential to: release a polluting substance to air, water or land (e.g. exhaust emissions, hazardous waste, spills, etc.); impact human health; noise or vibration; and/or alter landscape features. Note: The scope of the EEA excludes activities related to the use of munitions.

6.1.4.1.2. Environmental impacts: Describe the potential environmental impacts identified above.

6.1.4.1.3. Mitigation Measures: Describe mitigation measures to eliminate or reduce identified potential environmental impacts, including those that are part of the design, any warning devices,

emission control equipment, spill response, safe handling and disposal procedures, training, PPE, labels on equipment, cautions and warnings in the Technical Documentation, monitoring or inspections, etc.

6.1.5. **Conclusions and Recommendations**

6.1.5.1. Summarize the main environmental impacts and recommended mitigation measures.

6.1.6. **References**

6.1.6.1. List references consulted in the completion of the tables (such as Canadian legislation, DND policies and procedures, technical documentation, etc.).

6.1.7. **Table 1 - Identification of Hazardous Substances and Chemical Products**

Table 1 lists the integrated hazardous substances and chemical products that must be identified, if they are incorporated in the equipment design. The hazardous chemical products must have safety data sheets (SDS) which conform to WHMIS 2015, and must be provided in Annex A.

Integrated Hazardous Substances	**NSN**	**Original OEM Part Number**	**Item Description**	**Location**	**Additional Details**
Arsenic, Cadmium, Chromium VI, Cobalt, Lead, Radioactive metals					
Halocarbons – refrigerant and air-conditioning systems					Type and weight (kg). Global Warming Potential of Hydrofluorocarbons used for refrigerant applications.
Mercury and its compounds					Form of mercury (e.g. liquid, vapour) and weight (mg)
Polychlorinated Biphenyl (PCBs)					Form (liquid or solid), quantity (kg), volume (L) and concentration in ppm
Hazardous Chemical Products (SDS Required)	**NSN**	**Original OEM Part Number**	**Ingredient**	**Chemical Abstract Service Number (CAS#)**	**Controls***
Halocarbons – Fire extinguishing systems					
Halocarbons – In aerosol Products					
Paints and related commodities (CARC and non-CARC)					
Fire-fighting Foams					
Cleaner and Degreasers					
POLs (Petroleum, Oils, Lubricants)					
Adhesives					
Anti-seize					
Corrosion Inhibitor					
Decontaminant					
Detector Kit Chemical substances					

*Controls: Identify if the substance is regulated under the Canadian Environmental Protection Act, targeted in Schedule 1, Toxic Substance List under CEPA and/or subject to the reporting requirements under the National Pollutant Release Inventory (NPRI).

6.1.8. **Table 2 – Identification of radiation sources and batteries**

Table 2 lists the ionizing and non-ionizing radiation sources and batteries.

Categories	**NSN**	**Original OEM Part Number**	**Item Description**	**Location ***	**Additional Details**
Non-ionizing radiation					Type of electromagnetic energy (laser, microwave, radio frequency) and strength
Ionizing radiation					Type and quantity or activity level

Batteries					Type

* Identify the system/sub-system where these items are located.

6.1.9. **Annex A – Safety Data Sheets SDS for all chemical products identified in the EEA**

6.2. **SOFT COPY FORMAT**

6.2.1. The EEA must be provided as a PDF file.

6.2.2. **Soft Copy format submission size below 7MB** – The EEA may be submitted via email as follows:

6.2.2.1. To Field: As per the related CDRL section 9.A. Addressee, as identified in the contract.

6.2.2.2. Subject Field: MUGVS-ILS-214 – EEA – [Rev #] – [Date of Issue]

6.2.3. **Soft Copy format submission size at or above 7MB** – The EEA file must be submitted on CD or DVD media and be labelled as follows:

6.2.3.1. Mini Unmanned Ground Vehicle System

6.2.3.2. EEA

6.2.3.3. MUGVS-ILS-214;

6.2.3.4. The Revision number, and

6.2.3.5. The date of issue.

ANNEX B

STATEMENT OF WORK

FOR THE SUPPORT OF THE

MINI UNMANNED GROUND VEHICLE SYSTEM

Version/Amendment History

Version/Amendment	Date	Notes
Original	July 18 2022	

TABLE OF CONTENTS

1.0 SCOPE

1.1 Purpose

1.1.1 The purpose of this Statement of Work (SOW) is to describe DND's requirements for work to be carried out by the Contractor, including the provision of material and Repair & Overhaul (R&O), in support of the Mini Unmanned Ground Vehicle System (MUGVS).

1.1.2 Work will be conducted and completed either in Canada at Canadian Armed Forces (CAF) locations, at operational sites where CAF are deployed, or at the Contractor's plant.

1.2 Concept of Operations & Support

1.2.1 The Concept of Operations provides context necessary to fully understand the SOW.

Aspect	Description
Anticipated service life	10 to 15 years
Annual operating hours	Difficult to predict because of intermittent usage. Continuous operation when in use.
DND Responsibilities for Maintenance	The MUGVS will be maintainable by CAF operators and technicians in a field environment as prescribed for each item of equipment: **Operator Maintenance** – consisting of maintenance that will not require Special Tools and Test Equipment (STTE) to complete, as well as equipment cleaning. Task duration generally less than one (1) hour. **Technician Maintenance, First Line** – consisting of preventive and minor corrective maintenance tasks by repair or replacement of parts, and could require STTE to complete this maintenance. Task duration generally less than four (4) hours. **Technician Maintenance, Second Line** – consisting of corrective maintenance requiring additional tools, specialized personnel, STTE, or controlled environmental conditions. Task duration generally between four (4) and 24 hours.
Contractor Responsibilities for Maintenance	The more in-depth maintenance tasks, consisting of corrective maintenance tasks, reconditioning of assemblies and component rebuilds, will be done through this support contract.
Contractor Training Responsibility	Contractor will provide Operator and Technician training as and when required. Training material is being provided through the Acquisition Contract.

1.3 Land Equipment Management System

1.3.1 The Contractor should be familiar with the Land Equipment Management System (LEMS) that is documented in B-GL-342-001/FP-000, which describes the DND approach to the management of land equipment.

1.4 Contractors Performing R&O

1.4.1 Some of the work performed by the Contractor will be repair and overhaul of equipment. The *Special Instructions Repair and Overhaul Contractors* (A-LM-184-001/JS-001) describes the instructions and procedures governing civilian contractors engaged in the R&O of material on behalf of the DND.

1.5 Acronyms and Abbreviations

AAS	Accountable Advance Spares
AEFC	Army Equipment Fielding Center
AWR	Additional Work Request
CA	Contracting Authority
CAF	Canadian Armed Forces
CER	Combat Engineer Regiment
CDRL	Contract Data Requirements List
CFB	Canadian Forces Base
CFSD	Canadian Forces Supply Depot
CFSME	Canadian Forces School of Military Engineering
CGCS	Canadian Government Cataloguing System
CIS	Contract Issue Spares
CORE	Designates CORE (fixed price basis) requirements
CRPA	Contractor Repair Parts Account
CRCI	Catalogue of Repairable and Consumable Items
CSA	Canadian Standards Association
CSR	Contract Status Report
DGLEPM	Director General Land Equipment Program Management
DID	Data Item Description
DND	Department of National Defence
DRMIS	Defence Resources Management Information System
DSCO	Director Supply Chain Operations
EMT	Equipment Management Team
ESR	Engineer Support Regiment
FSR	Field Service Representative
GFOS	Government Furnished Overhaul Spares
IAW	In Accordance With
ILS	Integrated Logistic Support
IP	Intellectual Property
ITAR	International Traffic in Arms Regulations
LEMS	Land Equipment Maintenance System
MRC	Maximum Repair Cost
NATO	North Atlantic Treaty Organization
NCAGE	NATO Commercial and Government Entity
NSN	NATO Stock Number

NTM	Notice to Move
OEM	Original Equipment Manufacturer
PA	Procurement Authority
PDF	Portable Document Format
PM	Program Management
PSPC	Public Service and Procurement Canada
R&O	Repair and Overhaul
RbR	Repair by Replacement
RCE	Repair Cost Estimate
RGC	Régiment de génie de combat
RMA	Repair Material Account
RSA	Repair Shop Account
SMP	Support Management Plan
SNAPS	Selection Notice and Priority Summary
SOW	Statement of Work
SPTD	Supplementary Provisioning Technical Documentation
STTE	Special Tools and Test Equipment
TA	Technical Authority
TASKING	Designates TASKING (as and when needed) requirements
TAT	Turn-around-time
TDP	Technical Data Package
TDPL	Technical Data Plan & List
TIES	Technical Investigation and Engineering Support
TPM	Technical Problem Management

2.0 APPLICABLE DOCUMENTS

2.1 References

2.1.1 Whereas mentioned, the following Standards must be used for the preparation of deliverables to the extent specified in this SOW:

REFERENCE NUMBER	PROMULGATION DATE	REFERENCE TITLE
A-LM-184-001/JS-001	2019-05-06	SPECIAL INSTRUCTIONS REPAIR AND OVERHAUL CONTRACTORS
SAE ANSI/EIA-649C	2019	CONFIGURATION MANAGEMENT STANDARD
B-GL-342-001/FP-000	2001-09-10	LAND EQUIPMENT MANAGEMENT SYSTEM (LEMS)
C-02-005-009/AM-000	2019-10-31	INSPECTION AND CONDITIONING OF MATERIAL RETURNED TO AND HELD IN THE SUPPLY SYSTEM
D-01-100-214/SF-000	2020-09-30	SPECIFICATION - PREPARATION OF PROVISIONING DOCUMENTATION FOR CANADIAN FORCES EQUIPMENT
D-01-400-001/SG-000	2021-09-30	STANDARD - ENGINEERING DRAWING PRACTICES
D-LM-008-001/SF-001	1983-02-03	METHODS OF PACKAGING
D-LM-008-002/SF-001	1991-08-01	SPECIFICATION FOR MARKING FOR STORAGE AND SHIPMENT
D-LM-008-011/SF-001	1988-11-10	PREPARATION AND USE OF PACKAGING REQUIREMENTS CODES
SOR/2003-289		FEDERAL HALOCARBON REGULATIONS
SOR/2008-273		PCB REGULATIONS
SOR/2014-254		PRODUCTS CONTAINING MERCURY REGULATIONS
SOR/2016-137		OZONE-DEPLETING SUBSTANCES AND HALOCARBON ALTERNATIVES REGULATIONS

2.2 Order of Precedence

2.2.1 In the event of conflict between the content in this SOW and the referenced documents, the content of this SOW will take precedence.

3.0 R&O REQUIREMENTS

3.1 Program Management

3.1.1 General

3.1.1.1 Contractor Test Facilities

3.1.1.1.1 The Contractor must possess or have access to testing facilities required to confirm serviceability of the equipment after repair or upgrade work on the MUGVS or its equipment.

3.1.1.2 Contractor Publication Resources

3.1.1.2.1 The Contractor, or their sub-Contractor, must have office resources necessary to produce electronic manuals, technical drawings, and other logistics and engineering documentation.

3.1.2 Program Meetings

3.1.2.1 Meeting Organization and Coordination

3.1.2.1.1 The Contractor must ensure that the necessary data, personnel and facilities are available for each meeting.

3.1.2.1.2 As appropriate, meetings may be held at the Contractor's or DND facilities at the discretion of the DND EMT.

3.1.2.1.3 The Contractor's Program Manager must be present at all meetings. If the Program Manager does not have final approval authority for decision making and changes, then the person that has that final approval authority must also be present at all meetings.

3.1.2.2 Kick-off Meeting

3.1.2.2.1 The Contractor must hold and chair, along with Canada, a Kick-off Meeting no later than 21 calendar days after contract award, to review and secure a common understanding of the requirements expressed in this contract.

3.1.2.3 Other meetings

3.1.2.3.1 The Contractor and the DND EMT may schedule informal reviews, such as conference calls, webinars (conference calls augmented by simultaneous PowerPoint presentations on the Internet), video conferences, briefings and technical interchange meetings, as required to help achieve the requirements of the contract.

3.1.2.4 Meeting Documentation

3.1.2.4.1 The Contractor must provide Meeting Agendas IAW CDRL MUGVS-PM-001 at Appendix A2.2 (page 24) and its associated DID MUGVS-PM-001 at Appendix A3.3 (page 26).

3.1.2.4.2 The Contractor must record and provide the Meeting Minutes IAW CDRL MUGVS-PM-002 at Appendix A2.2 (page 24) and its associated DID MUGVS-PM-002 at Appendix A3.4 (page 28).

3.1.2.4.3 No change in the interpretation of the program management, SOW, cost, or schedule, as defined in the contract, may be authorized by the minutes of a meeting. Such change must require formal contract amendment by the CA.

3.1.3 Government Property

3.1.3.1 All equipment / spares / parts that may be provided to the Contractor in support of the MUGVS, including those purchased during the contract, must be considered DND-owned, regardless of being held at the Contractor's facility.

3.1.3.1.1 Government-owned and DND-owned must be considered as interchangeable terms.

3.1.3.2 The Contractor must provide suitable protections, such as a separated secure storage facility and insurance, to protect all Government Supplied Materials, including equipment, spares, parts, Technical Data Package (TDP), documentation, software, and Special Tools & Test Equipment.

3.1.4 DND Material Supply Logistics

3.1.4.1 The Contractor must refer to section A4.0 and A-LM-184-001/JS-001, for further requirements for equipment logistics for DND-owned equipment.

3.1.4.2 Supply Accounts for DND-owned Material

3.1.4.2.1 The Contractor will be allocated a Repairable Material Account (RMA). All material (generally prime equipment and Line Replaceable Units that are DND-owned) shipped to the Contractor must be identified in the Defence Resource Management Information System (DRMIS) against the assigned RMA.

3.1.4.3 Contract Issue Spares

3.1.4.3.1 The Contractor must maintain visibility of DND-owned material, classified as Contract Issue Spares (CIS).

3.1.4.3.1.1 To account for these CIS, the Contractor will be allocated a Contractor Repair Parts Account (CRPA) and a Repair Shop Account (RSA).

3.1.4.4 Stock Control and Stock Taking (DND-owned Material)

3.1.4.4.1 The Contractor must perform stock control and stocktaking of DND-owned Contractor held inventory, including:

3.1.4.4.1.1 Institute, maintain and apply a system for inventory accounting, control, storage and handling, preservation, protection and maintenance.

3.1.4.4.1.2 Designate, allocate and prepare a storage area in its facility specifically to accommodate DND-owned stock.

3.1.4.4.1.3 As a risk mitigation measure, in case of a strike or lockout action, ensure that DND has continued access to, and protection of, inventory that it requires in support of operations.

3.1.4.4.1.4 Initiate and complete a one hundred per cent (100%) manual stocktaking (visual confirmation) of RMA, RSA, CRPA (CIS) and all material listed in the Contractor Held Inventory Report, one (1) time each year.

3.1.4.4.1.5 The Contractor must promptly conduct investigations into every discrepancy arising from stocktaking of Contractor managed DND-owned material, and must immediately notify DND of all deficiencies that are discovered.

3.1.5 Hazardous Materials

3.1.5.1 The Contractor must be solely responsible for the handling, transportation and disposal of all waste, and hazardous waste material generated as a result of the work in this SOW.

3.1.6 Environmental Management and Assessment

3.1.6.1 General

3.1.6.1.1 The Contractor must use low-risk chemical products for equipment maintenance and repair where feasible. Low-risk chemical products are defined as those that do not contain substances regulated under the Canadian Environmental Protection Act, 1999 (CEPA) and listed on Schedule 1 of CEPA.

3.1.6.1.2 The Contractor is responsible for ensuring that all work carried out on DND equipment by staff, or duly appointed sub-contractors, is:

3.1.6.1.2.1 Completed using personnel qualified and certified in the scope of work that they are undertaking and,

3.1.6.1.2.2 In compliance with all applicable municipal, territorial, provincial, federal environmental protection statutes and regulations.

3.1.6.1.3 The Contractor must provide (when asked) and ensure the use of up-to-date (no older than three (3) years) Material Safety Data Sheets.

3.1.6.1.4 In accordance with the Federal Halocarbon Regulations (SOR/2003-289) and the Ozone-depleting Substances and Halocarbon Alternatives Regulations (SOR/2016-137), any halocarbons that are incorporated into the equipment, must comply with regulations SOR/2003-289 and SOR/2016-137. If such substances must be used, the Contractor must:

3.1.6.1.4.1 Inform the Technical Authority by identifying the substance(s).

3.1.6.1.4.2 Identify the specific location within the equipment and the quantity.

3.1.6.1.5 In accordance with the Products Containing Mercury Regulations (SOR/2014-254), if mercury is present in any part of the equipment, the mercury content limit must comply with the regulation SOR/2014-254. If such substances must be used, the Contractor must:

3.1.6.1.5.1 Inform the Technical Authority by identifying the substance(s).

3.1.6.1.5.2 Identify the specific location within the equipment and the quantity.

3.1.6.1.6 In accordance with the Polychlorinated Biphenyls (PCBs) Regulations (SOR/2008-273), if PCBs are present in any part of the equipment, they must comply with the regulation. If such substances must be used, the Contractor must:

3.1.6.1.6.1 Inform the Technical Authority by identifying the substance(s).

3.1.6.1.6.2 Identify the specific location within the equipment and the quantity

3.1.6.2 Environmental Management System

3.1.6.2.1 The Contractor must implement and maintain an Environmental Management System which is consistent with the principles presented in ISO 14001. Certification to this standard is preferred but not mandatory.

3.1.6.2.2 The Contractor must have a formalized set of procedures and control measures in place to demonstrate environmental compliance and minimize environmental impact of the work.

3.2 Operating, Training & Engineering Support

3.2.1 General

3.2.1.1 A TASKING request defines the scope / objectives and may be initiated by either Canada or by the Contractor. If initiated by the Contractor, the following information must be provided:

3.2.1.1.1 Estimated duration;

3.2.1.1.2 Reporting frequency and format;

3.2.1.1.3 Level of effort, and

3.2.1.1.4 Estimated cost.

3.2.2 Operators and Technical Personnel

3.2.2.1 In order to provide satisfactory operators and technical personnel (Field Service Representatives & Mobile Repair Parties are possibly the same resources), the Contractor must provide the following:

3.2.2.1.1 Operators and technical personnel that can provide training on the MUGVS.

3.2.2.1.2 Operators and technical personnel that can work extended hours and during holidays.

3.2.2.1.3 Operators and technical personnel that can perform in-depth maintenance on the MUGVS.

3.2.2.1.4 Operators and technical personnel that can mentor and advise CAF operators and technicians in the performance of their tasks using the MUGVS.

3.2.2.1.5 Operators and technical personnel that are knowledgeable of the Contractor's engineering and support organization and able to obtain a quick response to queries regarding technical concerns and material status.

3.2.3 Technical Investigation and Engineering Support

3.2.3.1 The Contractor must provide TIES, when and as requested by DND. Such tasks could include:

3.2.3.1.1 Conducting specialized testing;

3.2.3.1.2 Performing specialist engineering studies, such as human factors, survivability, electromagnetic interference/compatibility, safety and health, reliability and maintainability;

3.2.3.1.3 Providing engineering assessments and recommendations (for example, regarding trends, failures (including repetitive failures), defects, safety hazards, corrosion, and technology insertion);

3.2.3.1.4 Developing alternate or supplementary operating, maintenance, and supply procedures;

3.2.3.1.5 Rationalizing the preventive maintenance requirements in areas where there is a potential for significant improvements in maintenance effectiveness or efficiency;

3.2.3.1.6 Preparing technical bulletins and preparing supporting technical data;

3.2.3.1.7 Developing repair schemes for potential repairs not covered in maintenance manuals;

3.2.3.1.8 Preparing additional publications or amendments to existing publications;

3.2.3.1.9 Translating technical publications into either Canadian official language (English or Canadian French);

3.2.3.1.10 Performing post battle damage assessments, and determine how to return equipment to a serviceable state, or if it can be cannibalized for parts;

3.2.3.1.11 Designing and developing modifications/upgrades/conversions, updating drawings, preparing modification installation instructions and providing modification installation kits;

3.2.3.1.12 Investigating software faults, and viruses, and develop solutions. Update software embedded in the system or its associated equipment;

3.2.3.1.13 Assessing regulatory compliance, especially regarding safety and protection of the environment;

3.2.3.1.14 Obtain CSA/UL or equivalent safety certifications for the equipment that has been modified or repaired through the work under this contract.

3.2.3.2 On completion of the TIES, the Contractor must report its findings to the DND TA within 14 calendar days, or another timeframe agreed to by the DND TA.

3.3 Maintenance Support

3.3.1 General

3.3.1.1 The terms ‘repair’ and ‘overhaul’ are defined as follows:

3.3.1.1.1 Repair - The identification and correction of those specific defects which degrade the performance of an item, causing it to function below its specification or not as described in its operations manual.

3.3.1.1.2 Overhaul - The restoration of an item to its original condition and life expectancy. It includes the replacement of worn, damaged or life expired parts; the incorporation of approved modifications; and the rework of components as necessary.

3.3.1.2 The Contractor must provide Maintenance Support, including Repair and Overhaul (R&O), for the repairable items listed in A1.0 List of Items to be Supported (page 20).

3.3.1.3 The Contractor must perform R&O in accordance with this SOW, A-LM-184-001/JS-001 Special Instructions Repair and Overhaul Contractors, and the Quality Assurance requirements stated in para. 3.3.4, such that the CAF will be provided with functional, safe and reliable MUGVS.

3.3.1.4 The Contractor must use parts and materials as per the most recent or OEM design configuration.

3.3.1.4.1 Changes to the parts, equipment configuration, or design must be approved by the TA, and executed in accordance with the SOW.

3.3.2 Minimum and Forecasted Repairs

3.3.2.1 The minimum number of items that may be processed through the R&O facility may be zero.

3.3.2.2 The Current Year Forecast and Next Year Forecast quantity is dependent upon the quantity in service and operational urgency, and is defined in Appendix A1.0 List of Items to be Supported (page 20).

3.3.2.3 Updates to the Current Year Forecast and Next Year Forecast will be provided through the Selection Notice and Priority Summary (SNAPS) Report as detailed in A-LM-184-001/JS-001.

3.3.3 Extent of R&O Maintenance

3.3.3.1 The Contractor must provide R&O Maintenance support to the extent listed here:

3.3.3.1.1 Materials - All equipment system components must be inspected and repaired as required. Defective components shall be repaired or replaced.

3.3.3.1.2 Mechanical - All mechanical systems must be inspected and repaired as required. Defective components must be repaired or replaced.

3.3.3.1.3 Electrical - All electrical components must be inspected, tested and repaired as required. Defective components must be repaired or replaced.

3.3.3.1.4 Safety - All systems/components affecting the safety of the user/operator or those affecting hazardous operation of the equipment must be inspected and tested for correct operation. Defective components must be replaced. All warning decals, labels, data plates must be clear and legible.

3.3.4 Quality Assurance

3.3.4.1 Quality of R&O Work

3.3.4.1.1 The R&O must be performed in accordance with this SOW and the Quality Assurance requirements stated herein, such that the CAF will be provided with functional, safe and reliable equipment. In the case of differences among these references, this SOW takes precedence.

3.3.4.2 Quality Assurance Representative

3.3.4.2.1 All stages of the R&O procedures will be subject to inspection by a Canadian Government DND Quality Assurance Representative unless DND authorizes otherwise. The representative will monitor for best industrial practices and will have the authority to stop work if poor practices or dangerous conditions are noted and cannot be resolved on-site.

3.3.4.3 Testing and Inspection

3.3.4.3.1 The Contractor must perform testing to confirm serviceability for each piece of repaired/overhauled equipment.

3.3.4.3.2 The Contractor must prepare a test report in the Contractor's format. A copy of the report must be retained by the Contractor and a copy forwarded electronically to the TA.

3.3.4.3.3 The Contractor must visually inspect all completed equipment for security of components and hazardous conditions, and all deficiencies must be noted and repaired.

3.3.5 Repair Turn-Around-Time (TAT)

3.3.5.1 The Contractor must complete repairs **within ninety (90) calendar days from receipt**, unless otherwise indicated in Appendix A1.0 List of Items to be Supported (page 20) or by the DND EMT.

3.3.5.1.1 The repair TAT includes all the time that the item requiring repair is in the custody of the Contractor, from receipt at the handover point to return to the handover point.

3.3.5.2 In the case of a priority repair request, system-level refurbishment, or battle damage repair, the DND EMT will provide a SOW defining the scope of work and new schedule, as a TASKING.

3.3.6 Repair Cost Estimates (RCE)

3.3.6.1 Upon receipt of the Repairable Items indicating an RCE, as shown items in Appendix A1.0 List of Items to be Supported (page 20), the Contactor must provide an RCE including all labour, sub-contracting and shipping, materiel costs and administration fees to the TA for approval before the repair can proceed.

3.3.6.2 If DND provides spare parts to the Contractor, or spare parts are already Contractor Held and Managed, the Contractor must deduct the value of the parts from the RCE of the item for which the parts are intended.

3.3.7 Condemn/Scrapping Considerations

3.3.7.1 If it is decided not to repair the equipment, the DND EMT will provide guidance on scrapping procedures to the Contractor at that time.

3.3.7.2 If the equipment contains embedded software (and possibly data) it may be necessary to erase the stored software and data prior to disposing of the equipment. In such cases, the Contractor must seek direction from the DND EMT.

3.3.7.3 When DND-owned equipment is to be scrapped, the Contractor must take care to comply with all International Traffic in Arms Regulations (ITAR) regarding the disposal method used and record keeping.

3.3.7.3.1 Guidance on disposal is available through assigned Demilitarization Codes.

3.3.8 Software Maintenance

3.3.8.1 The Contractor must perform routine software maintenance including software installation, data load and unload, backup and recovery, release replication and distribution.

3.3.9 Provision of Material (R&O)

3.3.9.1 The Contractor must obtain the parts (repairable and consumable items) required for the R&O Maintenance Support, including locating sources of supply.

3.3.9.2 The Contractor must obtain and make available parts for **'Repair by Replacement'** (RbR) situations, where the repair can be done in the field.

3.3.9.2.1 RbR situations also apply to parts that are required so rarely that they would never be stocked in depot, and the cost is minimal compared to the transport cost of shipping the MUGVS back for R&O Maintenance Support at the Contractor's site.

3.3.9.2.2 RbR parts would be requested on an as and when required basis that will be detailed in a DND 626 Task Authorization.

4.0 CONTRACT DELIVERABLES

4.1 Repaired Material

4.1.1 The Contractor will receive direction from the TA for the final delivery destination of all repaired materiel on an individual basis; however, if not received the default delivery will be to 7 Canadian Forces Supply Depot.

4.1.2 The Contractor must include a properly completed and signed CF942/CF942A Materiel Condition Tag/Label, when applicable, IAW C-02-005-009/AM-000 Inspection and Condition of Materiel Returned to and Held in the Supply System, for all returned items.

4.1.2.1 The CF942/CF942A Tags/Labels are to be directly attached to the materiel returned after repair and overhaul IAW C-02-005-009/AM-000, and will be provided by DND Quality Assurance Representative.

4.2 R&O Service Record and Test Report

4.2.1 The Contractor must provide an R&O Service Record and Test Report with each piece of equipment for shipment, returning from R&O.

4.3 Data Deliverable List

4.3.1 The Contractor must prepare and deliver all data deliverables required under the Contract as summarized in para. 4.4.

Note: ‘LOT’ equates to a varied quantity needed to fulfill the requirements of the CDRL.

4.4 List of Support Requirements & Data Deliverables

Item	Item Description	Initial Submission/ Delivery QTY	Subsequent Submissions / Replenishment
1	Program Management – work performed continuously under a fixed price basis.	As defined in section 3.1 within Annex A	-
2	Meeting Agenda (para 3.1.2.4.1)	1	LOT
3	Meeting Minutes (para 3.1.2.4.2)	1	LOT
4	Operator, Training & Engineering Support – work performed through DND 626 Task Authorization process (as-and-when requested work).	As defined in section 3.2 Within Annex A	-
5	R&O Maintenance Requirements – work performed as a pre-authorized R&O repair	As defined in section 3.3 Within Annex A	-
6	R&O Service Record and Test Report	LOT – with the equipment for shipment	LOT – with the equipment for shipment

A1.0 APPENDIX: LIST OF ITEMS TO BE SUPPORTED

A1.1 Supported Equipment and Spares

A1.1.1 The Contractor must provide support for the equipment and spare items specified in Table 1 in accordance with the SOW. An explanation of each column is detailed below:

A1.1.1.1 System Identifier MRN/OEM Part No – A unique identifier for the Item, as used in the applicable technical manuals or supply management system.

A1.1.1.2 Item Nomenclature – The name of the Item that may include Item class/group categories and functional descriptors.

A1.1.1.3 NATO Stock Number (NSN) – The 13-digit identifier used in NATO and allied cataloguing systems. The NSN will be included if the Item is to be ordered by DND.

A1.1.1.4 Regular or Free-Flow R&O by Item

A1.1.1.4.1 Repair Cost Estimate (RCE) – Identifies that the item will require a cost estimate before repairs or overhaul can begin.

A1.1.1.4.1.1 This is used for regular R&O when equipment is more complex so the TA requires more visibility on what is being proposed, has not yet reached steady-state and is therefore harder to predict typical repair costs/requirements, and repairs occur at a low rate.

A1.1.1.4.2 Maximum Repair Cost (MRC) – Identifies the maximum amount authorized that includes all labour and material costs, to be expended to repair an item. Repairs above the MRC must be approved by DND before any repair or overhaul work commences. Standard Selection Notice Observation Message procedures as detailed in A-LM-184-001/JS-001 must apply.

A1.1.1.4.2.1 This is used for free-flow R&O when equipment repairs are well understood or are less complex, and are used for repairs that occur at a high rate.

A1.1.1.5 Repair Turn-Around-Time (TAT) – Identifies the Repair TAT, if different from the general Repair TAT, as defined in Support SOW, indicating that this item is of greater importance to the operation of the MUGVS and therefore requires a faster turn-around. Repair TAT is indicated in calendar days; if left blank, then general Repair TAT of 90 calendar days is followed.

A1.1.1.6 Current Year & Next Year Forecasts – Identifies the expected quantity, by fiscal year, of repairable equipment that will be passed through the R&O line.

Table 1: Supported Equipment and Spares

Item Identifier MRN/OEM Part No. (1)	Item Nomenclature (2)	NSN (if item can be ordered) (3)	Regular or Free-Flow RCE/MRC (4)	Repair TAT (cal. Days) (5)	Current Year Forecast 22/23 (6)	Next Year Forecast 23/24 (7)
	MUGVS		RCE			

A2.0 APPENDIX: CONTRACT DATA REQUIREMENTS LIST

A2.1 Management and Explanation of the CDRL

A2.1.1 Management of Data Items

A2.1.1.1 The Contractor must review, update and deliver amendments, or confirm the continuing accuracy of data items annotated with a maintenance period, in accordance with the CDRL.

A2.1.1.2 The Contractor must deliver amended, reissued or resubmitted data items to the location(s) and in the format and quantities specified in the CDRL for the initial submission of the data items.

A2.1.2 Explanation of the CDRL

A2.1.2.1 **CDRL Line Number** – This field provides the unique sequential number that identifies each data item within different functional groups (eg, PM-001, SE-101, & ILS-201).

A2.1.2.2 **CDRL Title** – This field identifies the title of the data item.

A2.1.2.3 **SOW Para Ref** – This field shows the paragraph in the SOW where the data item is stipulated. There may be multiple references to the data item in the SOW, but generally only the first (or one) reference is shown in the CDRL.

A2.1.2.4 **Version** – This field identifies the particular delivery of a data item during its lifecycle (ie, draft, final).

A2.1.2.5 **Delivery Schedule** – This field specifies the date(s) and/or events by which the data item is required to be delivered. The date of delivery applies to all delivery locations and quantities unless otherwise specified. Following are some of the abbreviations and symbols used with this column:

A2.1.2.5.1 'KO' means the Kick-Off Meeting date;

A2.1.2.5.2 Numerals indicate the number of Calendar Days, unless specified otherwise;

A2.1.2.5.3 '+' means after the specified date or event; and

A2.1.2.5.4 '-' means before the specified date or event.

A2.1.2.5.5 If a data item is required to be delivered before an event having a duration of greater than one day, delivery date must be calculated from the first day of that event. If a data item is required to be delivered after an event having a duration of greater than one day, the delivery date must be calculated from the last day of that event.

A2.1.2.6 **Quantity** – This field specifies the total number of data items to be delivered to the associated delivery location(s), including the number of hard (H) and soft (S) copies. When both hard and soft copies are requested, the action copy will be indicated in the notes column.

A2.1.2.7 **Addressee** – This field shows the short title of the DND representative to whom the hard and soft copies of the data items must be delivered. The action hard copy of the data item must be delivered to the first nominated location in this field.

A2.1.2.8 **Data Item Description Reference** – This field provides the identification of the DID with which the data item must comply.

A2.1.2.9 **DND Action Period** – This field defines the number of Calendar Days available to the DND to action the data item and respond to the Contractor, if that action requires a response.

A2.1.2.9.1 The period begins upon the date the action copy of the data item is received at the first nominated addressee.

A2.1.2.9.2 The action period applies to all deliveries, including first deliveries, amendments and re-issues. If a data item is delivered earlier than the first delivery date shown in the CDRL, the DND is not obliged to action it until after that date. If the action period states 'by MSR' for a data item delivered prior to a Mandated System Review (MSR), the action period ends when the minutes for that MSR are approved.

A2.1.2.10 **DND Action Required** – This field indicates the purpose for which the data item is being submitted to the DND, which will either be for Review, Approval or Acceptance.

A2.1.2.11 **Maintenance** – This field specifies either the timings or the time intervals, after each delivery, at which the data item must be reviewed by the Contractor and either have its continuing accuracy status confirmed in writing, or be updated and reissued. The Maintenance column does not apply to draft or preliminary versions of data items. The following abbreviations and codes are applicable to this column:

A2.1.2.11.1 xM – every x calendar months;

A2.1.2.11.2 R – to enable it to be considered at each MSR set out in the System Engineering program;

A2.1.2.11.3 SA – to enable it to be provided for the purposes of conducting Acceptance of each System;

A2.1.2.11.4 FA – to enable it to be provided for the purposes of Final Acceptance; and

A2.1.2.11.5 NA or blank – not applicable.

A2.1.2.12 Notes: Where necessary, additional explanatory information relating to a CDRL data item is provided in this column.

A2.2 CDRL Item List

CDRL #	CDRL Title	SOW Para Ref	Version	Delivery Schedule	Qty	Addressee	DID # and Ref	DND Action Period	DND Action Required	Maint	Notes
MUGVS-PM-001	Meeting Agenda	Para. 3.1.2.4.1 (pg. 10)	Draft	Meeting Date - 7	1S	CA, TA, PA	MUGVS-PM-001	5	Review		
			Revised	Meeting Date - 1	1S	CA, TA, PA	App. A3.3 (pg. 26)				
			Final	Meeting Date	1H	CA, TA, PA		7	Review or Acceptance		
MUGVS-PM-002	Meeting Minutes	Para. 3.1.2.4.2 (pg. 11)	Draft	Meeting Date + 7	1S	CA, TA, PA	MUGVS-PM-002	7	Review		
			Revised or Final	DND Comments + 7	1S	CA, TA, PA	App. A3.4 (pg. 28)	7	Review or Acceptance		

A3.0 APPENDIX: DATA ITEM DESCRIPTION

A3.1 Data Deliverable Format

A3.1.1 **Unless otherwise specified as a specific requirement, the Contractor must deliver all of the soft copies of data deliverables, in formats compatible with the office software currently in use by the DND as listed:**

A3.1.1.1 Microsoft (MS) Windows 10 Enterprise Operating System (OS);

A3.1.1.2 MS Edge 2019;

A3.1.1.3 MS Office Professional Plus 2013 (Word, Excel, Access, PowerPoint and Outlook); and

A3.1.1.4 Foxit PhantomPDF version 10;

A3.2 DID Table Definitions

The following section defines the various blocks of information found on the Data Item Description (DID) forms:

BLOCK 1 – TITLE
The title of the data item for the DID.

BLOCK 2 - IDENTIFICATION NUMBER
The Data Item Description (DID) number, consisting of a sequential three-digit number and prefixed with an abbreviation code, to uniquely identify the DID. Note that the 001-099 series is reserved to Program Management (PM) DIDs, the 101-199 series is reserved to Systems Engineering (SE) DIDs and the 201-299 series is reserved to Integrated Logistics Support (ILS) DIDs. The abbreviation codes used for the prefix are:

"PM" for Program Management
"SE" for Systems Engineering
"ILS" for Integrated Logistics Support

BLOCK 3 - DESCRIPTION
Provides a general description of the data content requirements.

BLOCK 4 – RELATED DOCUMENT(S)
Provides a listing of the related documents and specifications associated with and required to produce this DID.

BLOCK 5 - CONTRACT REFERENCE
The specific paragraph numbers from the Contract Statement of Work and CDRL to assist in identifying the work effort associated with the data item.

BLOCK 6 - PREPARATION INSTRUCTIONS
Provides the preparation instructions for the content and format requirements for the DID.

A3.3 **DID – Meeting Agenda**

DATA ITEM DESCRIPTION	
1. TITLE **Meeting Agenda**	2. IDENTIFICATION NUMBER **DID MUGVS-PM-001**
3. DESCRIPTION The Meeting Agenda contains the venue information and identifies the discussion items to be covered at meetings.	
4. RELATED DOCUMENTS	5. CONTRACT REFERENCE **SOW**: **Para. 3.1.2.4.1 (pg. 10)** **CDRL**: **App. A2.2 (pg. 24)**

6. PREPARATION INSTRUCTIONS

6.1. **CONTENT**

6.1.1. The Meeting Agenda must set forth the venue, identify all requirements and list the discussion items to be covered at the meeting.

6.1.2. Venue. The Meeting Agenda must address the venue as follows:

6.1.2.1. Meeting Identification Number;

6.1.2.2. Purpose;

6.1.2.3. Date, time and location; and

6.1.2.4. Attendees.

6.1.3. Discussion items. The Meeting Agenda must address the discussion items through the following sections:

6.1.3.1. Opening Remarks;

6.1.3.2. Agenda Review;

6.1.3.3. Review of Previous Minutes;

6.1.3.4. Opened Discussion Items;

6.1.3.5. New Discussion Items;

6.1.3.6. Review of Action Items;

6.1.3.7. Next Venue; and

6.1.3.8. Closing Remarks.

6.2. **HARD COPY FORMAT**

6.2.1. The Meeting Agenda must be printed on paper with these characteristics:

6.2.1.1. Weight of no less than 90 gsm;

6.2.1.2. Brightness of no less than 96 ISO brightness;

6.3. **SOFT COPY FORMAT**

6.3.1. The Meeting Agenda must be submitted as a PDF file type.

6.3.2. The Meeting Agenda PDF must be submitted via email (submission size not to exceed 7MB) as follows:

6.3.2.1. To Field: As per the related CDRL section 9.A. Addressee, as identified in the contract.

6.3.2.2. Subject Field: MUGVS-PM-001 – Meeting Agenda – [Rev #] – [Date of Issue]

A3.4 DID – Meeting Minutes

DATA ITEM DESCRIPTION	
1. TITLE **Meeting Minutes**	2. IDENTIFICATION NUMBER **DID MUGVS-PM-002**
3. DESCRIPTION The Meeting Minutes contains the detailed records of proceedings, discussions, decisions and action items from meetings.	
4. RELATED DOCUMENTS	5. CONTRACT REFERENCE **SOW**: **Para. 3.1.2.4.2 (pg. 11)** **CDRL**: **App. A2.2 (pg. 24)**

6. PREPARATION INSTRUCTIONS

6.1. **CONTENT**

6.1.1. The Meeting Minutes must contain the detailed records of proceedings, discussions, decisions and action items from the meeting and be presented through the following sections:

6.1.1.1. General – consisting of meeting identification number, purpose, date, time and location;

6.1.1.2. Attendees, consisting of the organization each person represents, and the identification of the Chairperson(s);

6.1.1.3. Opening Remarks;

6.1.1.4. **Action Item Report** - used to monitor issues, assign responsibility, direct action and track status, history, and progress, and must consisting of:

6.1.1.4.1. Item #; date initiated; required action; assigned actionee; target completion date; cross-reference to all related action items.

6.1.1.4.2. Action Item Report must be **updated** with each meeting and must consisting of:

6.1.1.4.2.1. Action Item current status and the actual date completed;

6.1.1.5. Next Venue;

6.1.1.6. Closing Remarks;

6.2. **SOFT COPY FORMAT**

6.2.1. The Meeting Minutes must be submitted as a PDF file type.

6.2.2. The Meeting Minutes PDF must be submitted via email (submission size not to exceed 7MB) as follows:

6.2.2.1. To Field: As per the related CDRL section 9.A. Addressee, as identified in the contract.

6.2.2.2. Subject Field: MUGVS-PM-002 – Meeting Minutes – [Rev #] – [Date of Issue]

A4.0 LOGISTICS FOR REPAIR AND OVERHAUL CONTRACTS

A4.1 GENERAL INTRODUCTION

A4.1.1 Aim

A4.1.1.1 This Logistic Statement of Work (LOG SOW) is distributed on the authority of the Assistant Deputy Minister (Material) (ADM (Mat)). It will be distributed, as required, internally to ADM (Mat) staff engaged in creating Repair and Overhaul (R&O) Contracts and Procurement Instruments (PI) and those who manage Repair and Overhaul Contracts.

A4.1.1.2 This is a common LOG SOW which will entail contract conditions for Repair and Overhaul contracts for:

A4.1.1.2.1 **In and Out of country:** For step by step instruction on in and out of country repair process refer to Annex B in the A-LM-184-001/JS-001. This model will describe the roles and responsibilities in the end to end repair process.

A4.1.1.2.2 **Major Equipment:** For complete instructions on receipt of Major Equipment, refer to Chapter 2 in the A-LM-184-001/JS-001.

A4.1.1.2.3 **Accountable Advance Spares** For complete instruction on AAS, refer to Chapter 8.2.7 in the A-LM-184-001/JS-001.

A4.1.1.3 This LOG SOW is to be read in conjunction with the A-LM-184-001/JS-001 for additional information. It is to be noted that there are Chapters that are mandatory when using the LOGSOW and must not be removed from the LOGSOW, if the contractor is managing Government Owned Materiel.

A4.1.1.4 It is to be noted that the LOG SOW is to be used primarily as a guide for R&O contracts. It is paramount that this LOG SOW be utilized with minimal changes for reasons of procurement standardization and departmental accountability. However, changes are permissible where there is a need to clarify specific requirements that would apply to equipment/weapon systems undergoing procurement and contract action.

A4.1.1.5 The following Chapters will be identified as mandatory or as applicable.

A4.1.1.6 It is important to understand the system of record (DRMIS) being used in DND and the various account structures in place. Contractors requiring access to DRMIS must obtain a PKI (Public Key Infrastructure) card in accordance with the recently implemented Two-Factor Authentication. All of this information is located in Chapter 1.1 of the A-LM-184-001/JS-001.

A4.1.2 EXTENT OF WORK/TYPES OF EQUIPMENT (Mandatory)

A4.1.2.1 Refer to Chapter 1.2 of A-LM-184-001/JS-001 for further information on the different types of DND Equipment that are authorized for repair and the category types.

A4.2 RECEIPT (Mandatory)

A4.2.1 Refer to Ch. 2.0 of the A-LM 184 for complete instruction on how to process receipts.

A4.2.2 **DISCREPANCIES IN SHIPMENTS (Mandatory)**

A4.2.2.1 The Contractor must action discrepancies in shipments in accordance with Chapter 2.1 of A-LM-184-001/JS-001.

A4.3 WORK CONTROL (Mandatory)

A4.3.1 The Contractor must ensure that the repair of all DND equipment is controlled by a serial numbered work order IAW Chap 3 of A-LM-184-001/JS-001.

A4.3.2 **COMPLETION OF WORK (Mandatory)**

A4.3.2.1 Refer to Chapter 3.1 of A-LM-184-001/JS-001.

A4.3.3 **STOP REPAIR ACTION (Mandatory)**

A4.3.3.1 The Contractor must comply immediately with all stop repair instructions. Detailed procedures are contained in Chapter 3.2 of A-LM-184-001/JS-001.

A4.4 ANNUAL REPAIR FORECAST – SNAPS (As applicable on an exceptional basis)

A4.4.1 Refer to Chapter 4 of the A-LM-184-001/JS-001 for more information.

A4.5 COST CONTROL (Mandatory)

A4.5.1 Refer to Chapter 5.0 of the A-LM-184-001/JS-001 for more information.

A4.6 COSTING RECORDS (Mandatory)

A4.6.1 The Contractor must prepare forms and maintain records IAW Chapter 6.0 of the A-LM-184-001/JS-001.

A4.6.2 **INVOICE/CLAIMS FOR PAYMENT (AAS SPARES) (As applicable)**

A4.6.2.1 The Contractor must submit monthly invoices for AA spare parts, IAW Chapter 6.1 of the A-LM-184-001/JS-001.

A4.7 MAINTENANCE SUPPORT-MINOR REPAIRS (Mandatory)

A4.7.1 Refer to Chapter 7.0 of the A-LM-184-001/JS-001 for more information.

A4.7.2 **MOBILE REPAIR PARTIES (MRPs) (As Applicable)**

A4.7.2.1 Refer to Chapter 7.1 of the A-LM-184-001/JS-001 for more information.

A4.7.3 **EQUIPMENT TURN AROUND TIME (TAT) (Mandatory)**

A4.7.3.1 Refer to Chapter 7.2 of the A-LM-184-001/JS-001 for more information.

A4.7.4 **PRIORITY REPAIR REQUEST (PRR) (Mandatory)**

A4.7.4.1 Refer to Chapter 7.3 of the A-LM-184-001/JS-001 for more information.

A4.7.5 **SPECIAL INVESTIGATIONS & TECHNICAL STUDIES (SITs) (As applicable)**

A4.7.5.1 Refer to Chapter 7.4 of the A-LM-184-001/JS-001 for more information.

A4.7.6 **TECHNICAL INVESTIGATIONS & ENGINEERING STUDIES (TIES) (As Applicable)**

A4.7.6.1 Refer to Chapter 7.5 of the A-LM-184-001/JS-001 for more information.

A4.7.7 **TERMINATION OF CONTRACT (Mandatory)**

A4.7.7.1 Refer to Chapter 7.6 of A-LM-184-001/JS-001.

A4.8 SUPPLY SUPPORT/SUSTAINMENT SUPPORT (Mandatory)

A4.8.1 **TRANSACTION DOCUMENTATION (Mandatory)**

A4.8.1.1 Refer to Chapter 8.1 of A-LM-184-001/JS-001 for more information.

A4.8.2 **CONTRACTOR SUPPLY ACCOUNTING (Mandatory)**

A4.8.2.1 Refer to Ch. 8.2 of A-LM-184-001/JS-001 for explanation of CRPA/CIS.

A4.8.2.2 CONTRACTOR ISSUE SPARES (CIS) MATERIEL RECEIVED OFF CONTRACT/PROCUREMENT (As Applicable)

A4.8.2.2.1 Refer to Chapter 8.2.3 of A-LM-184-001/JS-001 for more information.

A4.8.2.3 SHORTAGE OF CONTRACT ISSUE SPARES (CIS) (As Applicable)

A4.8.2.3.1 Refer to Section 8.2.4 of A-LM-184-001/JS-001 for more information.

A4.8.2.4 ORDERING/RECEIVING CATALOGUED CIS IN DRMIS (As Applicable)

A4.8.2.4.1 Refer to Section 8.2.5 of A-LM-184-001/JS-001 for more information.

A4.8.2.5 GOVERNMENT FURNISHED OVERHAUL SPARES (GFOS) (As Applicable)

A4.8.2.5.1 Refer to Section 8.2.6 of A-LM-184-001/JS-001 for further explanation and detail.

A4.8.2.6 ACCOUNTABLE ADVANCE SPARES (AAS) (As Applicable)

A4.8.2.6.1 Refer to Section 8.2.7 of A-LM-184-001/JS-001 for further explanation and detail.

A4.8.3 **MANAGEMENT OF DND-OWNED SPARES (As Applicable)**

A4.8.3.1 Refer to Chapter 8.3.1 of A-LM-184-001/JS-001 for more information.

A4.8.4 **SPARES REVIEW (As applicable)**

A4.8.4.1 Refer to Chapter 8.4 of A-LM-184-001/JS-001 for more information.

A4.8.4.2 LOAN OF GOVERNMENT FURNISHED INFORMATION/ GOVERNMENT FURNISHED EQUIPMENT (GFI/GFE) (As Applicable)

A4.8.4.2.1 Refer to Section 8.4.1 of A-LM-184-001/JS-001 for further explanation and detail.

A4.8.5 **STOCKTAKING (Mandatory)**

A4.8.5.1 Refer to Section 8.5 of A-LM-184-001/JS-001 for further explanation and detail.

A4.8.6 **SELECTION NOTICE OBSERVATION MESSAGE (SNOM) (Mandatory)**

A4.8.6.1 Refer to Chapter 8.6 of A-LM-184-001/JS-001.

A4.8.7 **EMBODIMENT FEES (As Applicable)**

A4.8.7.1 Refer to section 8.7 of A-LM-184-001/JS-001 for further explanation and detail.

A4.8.8 **LOSS OR DAMAGE TO DND MATERIEL (Mandatory)**

A4.8.8.1 Refer to section 8.8 of A-LM-184-001/JS-001 for further explanation and detail.

A4.8.9 **SCRAP - CUSTODY & DISPOSAL (Mandatory)**

A4.8.9.1 Refer to section 8.9 of A-LM-184-001/JS-001 for further explanation and detail.

A4.8.10 **PACKAGING (Mandatory)**

A4.8.10.1 Refer to section 8.10 of A-LM-184-001/JS-001 for further explanation and detail.

A4.8.11 **REUSABLE CONTAINER (As Applicable)**

A4.8.11.1 Refer to Chapter 8.11 of the A-LM-184-001/JS-001 for more information.

A4.8.12 **TRANSPORTATION/SHIPMENT IDENTIFICATION/MODE OF SHIPMENT/LOSS OR DAMAGE IN TRANSIT/ GENERAL CLAIMS PROCEDURES (Mandatory)**

A4.8.12.1 Refer to Chapter 8.12 of the A-LM-184-001/JS-001 for more information.

A4.9 WARRANTY CONSIDERATION (Mandatory)

A4.9.1 Refer to Chapter 9.0 of the A-LM-184-001/JS-001 for more information.

A4.10 CONTRACTOR USE OF DND EQUIPMENT/PUBLICATIONS (As Applicable)

A4.10.1 Refer to Chapter 10.0 of the A-LM-184-001/JS-001 for more information.

A4.11 PUBLICATIONS (As Applicable)

A4.11.1 Refer to Chapter 11 of A-LM-184-001/JS-001 for more information.

A4.12 OFFICE SERVICES (As Applicable)

A4.12.1 Refer to Ch. 12 of A-LM-184-001/JS-001 for further explanation.

A4.13 MINUTES OF MEETINGS (Mandatory)

A4.13.1 Refer to Ch. 13 of A-LM-184-001/JS-001 for further explanation.

A4.14 PLANT SHUTDOWN/VACATION PERIOD (Mandatory)

A4.14.1 Refer to Ch. 14 of A-LM-184-001/JS-001 for further explanation.

A4.15 REPORTS (Mandatory)

A4.15.1 Refer to Ch. 15 of A-LM-184-001/JS-001 for a complete list of reports available to contractors.

ANNEX C

FINANCIAL COSTING

MINI UNMANNED GROUND VEHICLE SYSTEM

ACQUISITION FINANCIAL COSTING TABLE

MANDATORY COMPLETION OF EACH PRICE "BOX". IF THERE IS NO COST PLEASE INSERT "0" or Nil.

Item #	Item Description	Qty	Unit price	Total price
1	MUGVS (para. A1.0)	48		
2	Contract Master Schedule (para. 3.2.1)	1		
3	Contract Status Report (para. 3.3.1)	LOT		
4	Kick-off Meeting (para. 3.4.2)	1		
	Meeting Agenda (para. 3.4.5.1.1)			
	Meeting Minutes (para. 3.4.5.1.2)			
5	ILS Meeting (para. 3.4.3)	1		
	Meeting Agenda (para. 3.4.5.1.1)			
	Meeting Minutes (para. 3.4.5.1.2)			
6	Application for Spectrum Supportability (para. 4.3.2)	1		
7A	Operator Manual - English (para. 4.4.1.1)	1		
7B	Operator Manual - Bilingual (para. 4.4.1.1)			
8A	Operator Quick Reference Card - English (para. 4.4.1.2.1)	1		
8B	Operator Quick Reference Card - Bilingual (para. 4.4.1.2.1)			
9A	Maintenance and Parts Handbook - English (para. 4.4.1.3.1)	1		
9B	Maintenance and Parts Handbook - Bilingual (para. 4.4.1.3.1)			
10A	Operator Training Package - English (para. 4.4.1.4.1)	1		
10B	Operator Training Package - Bilingual (para. 4.4.1.4.1)			
11A	Preservation, Storage and Reactivation Instructions - English (para. 4.4.1.5.1)	1		
11B	Preservation, Storage and Reactivation Instructions - Bilingual (para. 4.4.1.5.1)			
12	Provisioning Parts Breakdown (para. 4.5.3.1.1)	1		
13	Supplementary Provisioning Technical Documentation (para. 4.5.3.2.1)	1		
14	Material Identification Data Set (para. 4.5.3.3.1)	1		
15	Initial Provisioning Conference (para. 4.6.1)	1		
	Meeting Agenda (para. 3.4.5.1.1)			
	Meeting Minutes (para. 3.4.5.1.2)			
16	Identification Plates (para. 4.7.1)	LOT		
17	Controlled & Non-Controlled Goods List (para. 4.8.1)	1		
18	Identification Labels for Storage & Shipment and Packaging Codes (para. 4.9.3)	1		
19	List of Items to be Supported (para. 4.10.1)	1		

20A	Operator Training Session (para. 4.11.2)	Training Location:			
		CFB Edmonton	1		
20B		CFB Petawawa	1		
20C		CFB Gagetown	2		
20D		CFB Valcartier	1		
20E		Navy (TBD)	1		
21	Equipment Environmental Assessment (para. 5.4.1)		1		
				Subtotal	$ -
Please indicate to which lines items GST/HST is applied, if not to all				**GST/HST**	$ -
				Total	$ -
Note 1:	'LOT' equates to a varied quantity needed to fulfill the requirements of the CDRL.				

Optional Requirements:

Item #	Item Description	Qty	Unit price	Total price
22	MUGVS (para. A1.0), **up to 10 additional units**, including Operator, Maintnance and Parts Handbook, and Operator Quick Reference Card	10	$ -	$ -
23	Spare Parts for two (2) years of usage - assume 150 hours of use over the two years, and user maintenance follows the Maintenance Concept para. 4.1, supported by Contractor R&O which should not be costed here.	-	-	$ -

IN-SERVICE SUPPORT FINANCIAL COSTING TABLE

Bidders' Instructions

Note 1	Based on the requirements in Annex B Support SOW and the information provided in the tables below for the various activity scenarios, **Bidders must fill in firm years only, and the other white cells in the tables below.**
Note 2	Bidders must list all labour categories that may be required to completed the work. Other* Labour Categories that are not already listed may be added. The bidder must clearly describe which labour category they are proposing.
Note 3	Work Load % is an estimate and will only be used for costing purposes, these hours do not represent any intended or potential final contract value.
Note 4	Option Years would be negotiated at the time in a future contract.

Table One - Labour Categories - In-Service Support

Bidders must provide labour rates for the labour categories that it considers necessary to complete the work. Those categories not used can be left blank, or if required, additional labour categories can be added.

These rates will be used to calculate prices for the various tasks and activities directed or approved by DND, under the Support SOW, and used as fixed annual values in the Support Contract.

Labour Categories will be grouped into Administrative and Technical, and used in Table Two.

Labour Category	Bid Currency used		Firm Years (Hourly Rate)			Option Years (Hourly Rate) (to be negotiated - Note 4)						
			YEAR 1	YEAR 2	YEAR 3	YEAR 4	YEAR 5	YEAR 6	YEAR 7	YEAR 8	YEAR 9	YEAR 10
Project Manager		Hourly Rate/ Labour Category →										
Administration												
Engineer												
Technician												
Technologist												
Logistician												
Draftsperson/Illustrator												
Other*												
Other*												
Other*												

Table Two - ANNEX B - SUPPORT SOW - 3.0 R&O Activities (Pre-Authorized R&O)

Repair & Overhaul Activities	Details	Labour Category Group Estimated Workload			Firm Years (Workload x Avg. Rate x Percentage)			Option Years (Workload x Avg. Rate x Percentage) (to be negotiated - Note 4)						
		Labour Category Group	Average Hourly Rate	Workload percentage	YEAR 1	YEAR 2	YEAR 3	YEAR 4	YEAR 5	YEAR 6	YEAR 7	YEAR 8	YEAR 9	YEAR 10
R&O hourly work	*In the cell provided, Bidders must indicate what labour categories were used from each labour category group (Administrative and Techincal), as per Table One. **As the bidder is requested to propose their own labour categories as per Table One, only the average hourly rates for Administrative and Technical will be calculated and used for costing purposes. Bidders are requested to provide only one hourly rate per Labour Category Group. Example: If the bidder inputs Project Manager ($10.00/h) and Administration ($20.00/h) under the Labour Gategory Group Administrative, Project Manager plus Administration equals $30.00/h divided in 2, gives an average hourly rate of $15.00/h. For the R&O hourly work described in the Support SOW, the following is the overall estimated workload per year: Year 1 – Estimated Workload to be 300 hours Year 2 – Estimated Workload to be 300 hours Year 3 – Estimated Workload to be 300 hours	**Administrative** (Must Indicate what categories were used - Example - Project Manager, Administration, Other, etc.)		30% of overall hours										
		Technical (Must Indicate what categories were used - Example - Engineer, Technician, Other, etc.)		70% of overall hours										
		Mark-up/Overhead rate			%	%	%	%	%	%	%	%	%	%
		Sub-Total Cost →			$ -	$ -	$ -	$ -	$ -	$ -	$ -	$ -	$ -	$ -

Table Three - R&O Spares Provisioning

Repair & Overhaul Activities	Details		Firm Years (OEM Spares with Mark-up)			Option Years (OEM Spares with Mark-up) (to be negotiated - Note 4)						
			YEAR 1	YEAR 2	YEAR 3	YEAR 4	YEAR 5	YEAR 6	YEAR 7	YEAR 8	YEAR 9	YEAR 10
R&O Spares Provisioning	For R&O spares provisioning described in the Support SOW, the following is the overall estimated OEM spares required per year. Provide the cost of these spares to Canada, specifically including the Contractor's price markup (if any) on the OEM spares. Price of Spares are for evaluation purposes only and does not represent any intended or potential final price of spares. Example: if the Mark up is 5% the sub-total Cost would be Spares x 1.05 = $21,000		$200,000	$200,000	$200,000							
		Mark-Up, Parts Procurement (%)	%	%	%	%	%	%	%	%	%	%
		Sub-Total Cost →	$ -	$ -	$ -	$ -	$ -	$ -	$ -	$ -	$ -	$ -
		SUPPORT SOW R&O Activities - Subtotal	$ -	$ -	$ -	$ -	$ -	$ -	$ -	$ -	$ -	$ -
		GST/HST										
		Total Annual Value	$ -	$ -	$ -	$ -	$ -	$ -	$ -	$ -	$ -	$ -
		TOTAL FOR ALL FIRM YEARS OF IN-SERVICE SUPPORT (Table 2 +3)	$ -									

ANNEX A

STATEMENT OF WORK

FOR THE

SMALL UNMANNED GROUND VEHICLE SYSTEM

TABLE OF CONTENTS

1.0 SCOPE

1.1 Purpose

1.1.1 The purpose of this Statement of Work (SOW) is to define the work requirements for the Small Unmanned Ground Vehicle System (SUGVS), which will be used by the Canadian Armed Forces field engineer section in the roles of Explosive Ordnance Disposal and Improvised Explosive Device Detect and Defeat.

1.2 Intended Use

1.2.1

1.3 Acronyms and Abbreviations

CA	Contracting Authority
CAF	Canadian Armed Forces
CCS	Control and Communication System
CDRL	Contract Data Requirements List
CFB	Canadian Forces Base
CFSD	Canadian Forces Supply Depot
CFTO	Canadian Forces Technical Order
CMS	Contract Master Schedule
CNCGL	Controlled & Non-Controlled Goods List
CSR	Contract Status Report
DID	Data Item Description
DMC	Demilitarization Code
DND	Department of National Defence
DPA	Defence Product Act
DSCO	Director Supply Chain Operations
ECL	Export Control List
ECCN	Export Control Classification Number
EEA	Equipment Environmental Assessment
IAW	In Accordance With
ILS	Integrated Logistics Support
ILSM	Integrated Logistics Support Manager
IP	Intellectual Property
IPC	Initial Provisioning Conference
ISO	International Organization for Standardization
ITAR	International Traffic in Arms Regulations
LIS	List of Items to be Supported

MANET	Mobile Ad-hoc Network
MIDS	Materiel Identification Data Set
MRC	Maximum Repair Cost
NATO	North Atlantic Treaty Organization
NCAGE	NATO Commercial and Government Entity
NDID	National Defence Index of Documentation
NSN	NATO Stock Number
OEM	Original Equipment Manufacturer
OQRC	Operator Quick Reference Card
PA	Procurement Authority
PPB	Provisioning Parts Breakdown
PSPC	Public Service and Procurement Canada
R&O	Repair & Overhaul
RCE	Repair Cost Estimate
SDS	Safety Data Sheet
SOW	Statement of Work
SPTD	Supplementary Provisioning Technical Documentation
STTE	Special Tools and Test Equipment
SUGV	Small Unmanned Ground Vehicle
SUGVS	Small Unmanned Ground Vehicle System
TA	Technical Authority
USML	United States Munitions List

2.0 APPLICABLE DOCUMENTS

2.1 References

2.1.1 Whereas mentioned, the following Standards must be used for the preparation of deliverables to the extent specified in this SOW.

GOVERNMENT FURNISHED INFORMATION

REFERENCE NUMBER	PROMULGATION DATE	REFERENCE TITLE
C-01-100-100/AG-008	2018-08-01	POLICY/MANAGEMENT PROCEDURES AND GUIDELINES SPECIFICATION WRITER'S GUIDE FOR TECHNICAL DOCUMENTATION
C-02-007-000/AG-001	2016-01-01	CONTROLLED TECHNOLOGY ACCESS AND TRANSFER (CTAT) MANUAL
D-01-100-204/SF-000	2018-08-31	PREPARATION OF PREVENTIVE MAINTENANCE INSTRUCTIONS
D-01-100-205/SF-000	2000-10-31	SPECIFICATION – PREPARATION OF CORRECTIVE MAINTENANCE INSTRUCTION
D-01-100-207/SF-002	1996-07-12	SPECIFICATION – PREPARATION OF INTERIM ILLUSTRATED PARTS MANUALS FOR LAND EQUIPMENTS
D-01-100-211/SF-000	1988-12-07	SPECIFICATION – PRESERVATION, STORAGE AND HANDLING INSTRUCTION
D-01-100-214/SF-000	2020-09-30	CANADIAN FORCES SPECIFICATIONS – PREPARATION OF PROVISIONING DOCUMENTATION FOR CANADIAN ARMED FORCES EQUIPMENT
D-01-400-001/SG-000	2021-09-30	STANDARD – ENGINEERING DRAWING PRACTICES
D-01-400-002/SF-000	2018-07-31	CANADIAN FORCES SPECIFICATIONS – LEVELS OF ENGINEERING DRAWINGS
D-02-002-001/SG-001	2021-06-30	CANADIAN FORCES STANDARD – IDENTIFICATION MARKING OF DEPARTMENT OF NATIONAL DEFENCE MATERIEL
D-LM-008-001/SF-001	1986-06-30	METHODS OF PACKAGING
D-LM-008-002/SF-001	1991-08-01	SPECIFICATION FOR MARKING FOR STORAGE AND SHIPMENT
D-LM-008-011/SF-001	1988-11-10	PREPARATION AND USE OF PACKAGING REQUIREMENTS CODES
D-LM-008-036/SF-000	2020-09-30	CANADIAN FORCES SPECIFICATIONS – DEPARTMENT OF NATIONAL DEFENCE MINIMUM REQUIREMENTS FOR COMMERCIAL PACKAGING

COMMERCIALLY AVAILABLE

REFERENCE NUMBER	PROMULGATION DATE	REFERENCE TITLE
AMS-STD-595	LATEST EDITION	COLORS USED IN GOVERNMENT PROCUREMENT
EN 13763-26	2004	EXPLOSIVES FOR CIVIL USES - DETONATORS AND RELAYS - PART 26: DEFINITIONS, METHODS, AND REQUIREMENTS FOR DEVICES AND ACCESSORIES FOR RELIABLE AND SAFE FUNCTION OF DETONATORS AND RELAYS.
NEMA IEC 60529	N/A	DEGREES OF PROTECTION PROVIDED BY ENCLOSURES - IP CODE
R.S.C., 1985, C. H-3	1985	HAZARDOUS PRODUCTS ACT
SOR/86-304	2021-10-01	CANADA OCCUPATIONAL HEALTH AND SAFETY REGULATIONS
SOR/2003-289		FEDERAL HALOCARBON REGULATIONS
SOR/2008-273		PCB REGULATIONS
SOR/2012-285		PROHIBITION OF CERTAIN TOXIC SUBSTANCES REGULATIONS
SOR/2014-254		PRODUCTS CONTAINING MERCURY REGULATIONS
SOR/2016-137		OZONE-DEPLETING SUBSTANCES AND HALOCARBON ALTERNATIVES REGULATIONS
SOR/2018-196		PROHIBITION OF ASBESTOS AND PRODUCTS CONTAINING ASBESTOS REGULATIONS
STANAG 2290 ED. 2	18 NOV 2010	NATO UNIQUE IDENTIFICATION OF ITEMS

2.2 Order of Precedence

2.2.1 In the event of conflict between the content in this SOW and the referenced documents, the content of this SOW will take precedence.

3.0 PROJECT MANAGEMENT

3.1 Project Manager

3.1.1 The Contractor must designate a Project Manager with the responsibilities to coordinate, execute, and manage the Contractor's project management activities for the Contract. The Contractor's Project Manager must have the total responsibility for all works required under the Contract.

3.1.2 The Contractor's Project Manager must be the primary point of contact between the Contractor, the DND Technical Authority (TA), and the PSPC Contracting Authority for all issues related to the Contract.

3.2 Contract Master Schedule

3.2.1 The Contractor must provide a Contract Master Schedule (CMS) IAW Contract Data Requirement List (CDRL) SUGVS-PM-001 at Appendix A2.2 (page 33) to ANNEX A and its associated Data Item Deliverable (DID) SUGVS-PM-001 at Appendix A3.3 (page 41) to ANNEX A.

3.2.2 The Contractor must use the approved CMS as the primary schedule for managing the project.

3.2.3 The Contractor may amend the approved CMS, without first obtaining the TA's and Contracting Authority's approval, as long as:

3.2.3.1 Payments under the contract are not affected;

3.2.3.2 The milestones dates are not affected; and

3.2.3.3 The ability of Canada to meet its obligations under the contract is not affected.

3.3 Contract Status Report

3.3.1 The Contractor must provide a Contract Status Report (CSR) IAW CDRL SUGVS-PM-002 at Appendix A2.2 (page 33) to ANNEX A and its associated DID SUGVS-PM-002 at Appendix A3.4 (page 43) to ANNEX A.

3.4 Project Meetings

3.4.1 Meeting Organization and Coordination

3.4.1.1 The Contractor's Project Manager must be present at the Kick-off Meeting, and at other meetings when requested by Canada. If the Project Manager does not have final approval authority for decision making and changes, then the person that has that final approval authority must also be present.

3.4.2 Kick-off Meeting

3.4.2.1 The Contractor must hold and chair a Kick-off Meeting (at the Contractor's facility) no later than 21 calendar days after contract award to review and secure a common understanding of the following:

3.4.2.1.1 The requirements of the Contract;

3.4.2.1.2 The requirements of the SOW;

3.4.2.1.3 General overview of the project, risks, schedule and communication channels to follow, and

3.4.2.1.4 Other contractual and programmatic issues associated with the project as agreed between the TA, CA and the Contractor.

3.4.2.2 Refer to Meeting Documentation requirements found at ANNEX A para. 3.4.5.

3.4.3 Integrated Logistics Support (ILS) Meeting

3.4.3.1 The Contractor must hold and chair an ILS Meeting following the closure of the Kick-Off Meeting (see 3.4.2), in order to:

3.4.3.1.1 Review and secure a common understanding of the requirements expressed in the ILS CDRLs and DIDs, DND Canadian Forces Technical Orders (CFTO)s and specifications; and,

3.4.3.1.2 Discuss possible sparing strategies and concepts, lowest replaceable units, and lines of maintenance.

3.4.3.2 Refer to Meeting Documentation requirements found at ANNEX A para. 3.4.5.

3.4.4 Other meetings

3.4.4.1 The Contractor and the TA may schedule informal reviews, such as teleconferences, video conferences, briefings and technical interchange meetings, to help achieve the requirements of the Contract.

3.4.5 Meeting Documentation

3.4.5.1 The Contractor must prepare and deliver a meeting agenda for all formal meetings and conferences, and prepare and deliver the meeting minutes afterwards.

3.4.5.1.1 The Contractor must provide the Meeting Agenda(s) IAW CDRL SUGVS-PM-003 at Appendix A2.2 (page 33) to ANNEX A and its associated DID SUGVS-PM-003 at Appendix A3.5 (page 44) to ANNEX A.

3.4.5.1.2 The Contractor must record, prepare, and provide the Meeting Minutes of each meeting IAW CDRL SUGVS-PM-004 at Appendix A2.2 (page 33) to ANNEX A and its associated DID SUGVS-PM-004 at Appendix A3.6 (page 46) to ANNEX A.

3.4.5.2 No change in the interpretation of the SOW, Technical Specification, cost, and schedule, as defined in the Contract, may be authorized by the minutes of a meeting. Such changes will require formal contract amendment by the CA.

4.0 INTEGRATED LOGISTICS SUPPORT (ILS)

4.1 Maintenance Concept

4.1.1 The SUGVS will be maintainable by CAF operators and technicians in a field environment as prescribed for each item of equipment:

4.1.1.1 **Operator Maintenance** – consisting of maintenance that will not require Special Tools and Test Equipment (STTE) to complete, as well as equipment cleaning. Task duration generally less than one (1) hour.

4.1.1.2 **Technician Maintenance, First Line** – consisting of preventive and minor corrective maintenance tasks by repair or replacement of parts, and could require STTE to complete this maintenance. Task duration generally less than four (4) hours.

4.1.1.3 **Technician Maintenance, Second Line** – consisting of corrective maintenance requiring additional tools, specialized personnel, STTE, controlled environmental conditions or specific infrastructure requirements. Task duration generally between four (4) and 24 hours.

4.1.2 The more in-depth maintenance tasks, consisting of major corrective maintenance tasks, reconditioning of assemblies and component rebuilds, will be done through a Support Contract.

4.2 Instruments, Decals, Data Plates and Warnings

4.2.1 The Contractor must deliver all instruments, decals and data plates marked in metric units.

4.2.2 Where international symbols are not possible, the Contractor must provide bilingual markings in English and Canadian French, as per paragraph 4.4.5.

4.2.3 The Contractor must provide warning and precautionary data plates in both official languages of Canada (English and Canadian French) in order to protect personnel and equipment, as per paragraph 4.4.5.

4.3 Access to the Radiofrequency Spectrum

4.3.1 The Contractor must ensure that Radio Frequency equipment, systems, sub-systems, Configuration Items, and end products are certified by Innovation, Science and Economic Development Canada or meet Spectrum Supportability.

4.3.2 For SUGVS Radio Frequency components (transmitting and receiving), the Contractor must provide the Application for Spectrum Supportability IAW CDRL SUGVS-ILS-201 at Appendix A2.2 (page 33) to Annex A, and its associated DID SUGVS-ILS-201 at Appendix A3.7 (page 47) to this ANNEX A.

4.3.2.1 Spectrum Supportability is granted when Radio Frequency equipment is found to be in conformity with National Spectrum Policy and Standards to ensure compatibility with existing Radio Frequency equipment, both military and civilian, currently operating in the same frequency band.

4.3.2.2 DND policy, standards, and organization for spectrum management and instructions for obtaining frequency supportability and licensing can be found in B-GT-D35-001/AG-000 (DNDP 35) Management of the Radio Frequency Spectrum. National Spectrum Policy and Standards can be found on Innovation, Science and Economic Development Canada's website (http://www.ic.gc.ca) at: http://www.ic.gc.ca/eic/site/smt-gst.nsf/eng/h_sf01841.html.

4.4 Technical Publication Package

4.4.1 The Contractor must prepare and deliver the following Technical Publications:

4.4.1.1 Operator Manual

4.4.1.1.1 The Contractor must provide an Operator Manual IAW CDRL SUGVS-ILS-202 at Appendix A2.2 (page 33) and its associated DID SUGVS-ILS-202 at Appendix A3.8 (page 68) to this ANNEX A.

4.4.1.2 Operator Quick Reference Card

4.4.1.2.1 The Contractor must provide an Operator Quick Reference Card IAW CDRL SUGVS-ILS-203 at Appendix A2.2 (page 33) and its associated DID SUGVS-ILS-203 at Appendix A3.9 (page 70) to ANNEX A

4.4.1.3 Repair Manual

4.4.1.3.1 The Contractor must provide a Repair Manual IAW CDRL SUGVS-ILS-204 at Appendix A2.2 (page 33) and its associated DID SUGVS-ILS-204 at Appendix A3.10 (page 72) to this ANNEX A

4.4.1.4 Illustrated Parts Manual

4.4.1.4.1 The Contractor must provide an Illustrated Parts Manual IAW CDRL SUGVS-ILS-205 at Appendix A2.2 (page 33) and its associated DID SUGVS-ILS-205 at Appendix A3.11 (page 74) to this ANNEX A.

4.4.1.4.2 The Illustrated Parts Manual does not need to be provided in Canadian French.

4.4.1.5 Operator Training Package

4.4.1.5.1 The Contractor must provide an Operator Training Package IAW CDRL SUGVS-ILS-206 at Appendix A2.2 (page 33) and its associated DID SUGVS-ILS-206 at Appendix A3.12 (page 76) to ANNEX A.

4.4.1.6 Technician Training Package

4.4.1.6.1 The Contractor must provide a Technician Training Package IAW CDRL SUGVS-ILS-207 at Appendix A2.2 (page 33) and its associated DID SUGVS-ILS-207 at Appendix A3.13 (page 78) to ANNEX A.

4.4.1.7 Preservation, Storage and Reactivation Instructions

4.4.1.7.1 The Contractor must provide a Preservation, Storage and Reactivation Instructions IAW CDRL SUGVS-ILS-208 at Appendix A2.2 (page 33) and its associated DID SUGVS-ILS-208 at Appendix A3.14 (page 80) to ANNEX A.

4.4.2 Front Matter

4.4.2.1 The Contractor must include the following in each Technical Publication (except in the Operator Quick Reference Card):

4.4.2.1.1 A cover page (a template will be provided by the Integrated Logistics Support Manager (ILSM)) showing the date the publication was issued and the model/system designation;

4.4.2.1.2 A List of Effective Pages;

4.4.2.1.3 A Revision Control Table;

4.4.2.1.4 A detailed Table of Contents and List of Figures & Tables; and

4.4.2.1.5 An Acronyms and Abbreviations table

4.4.3 Supplementary Information

4.4.3.1 The Contractor must provide supplementary information, in the portions of text that require it, with one or more of the following notices, in the order listed:

4.4.3.1.1 **Danger.** The danger advisory will be used to draw attention to an extreme, violent and continuous hazard to life;

4.4.3.1.2 **Warning.** The warning advisory will be used to emphasize an operating or maintenance procedure, practice, condition, statement, which if not strictly observed, could result in injury to or death of personnel;

4.4.3.1.3 **Caution.** The caution advisory will be used to emphasize an operating or maintenance procedure, practice, condition, statement, which if not strictly observed, could result in maintenance, damage to or destruction of equipment, loss of mission effectiveness or long-term health hazards to personnel;

4.4.3.1.4 **Note.** The note will be used to point out a procedure, event or practice that it is desirable to highlight; and,

4.4.3.1.5 **Example.** The example will be used when required to clarify the preceding text.

4.4.4 Notice - Intellectual Property Rights

4.4.4.1 **For deliverables that contain only Foreground Information**, the Contractor must include a notice of Intellectual Property Rights in or on each deliverable. The Contractor must record that Canada has licensed Intellectual Property Rights as per Contract No. XXXXX, and must state that the deliverable contains no Background Information, and will identify the Contractor (if applicable) and each applicable grantor to the Contractor of those rights in the Foreground Information.

4.4.4.2 **For deliverables that contain only Background Information**, the Contractor must include a notice of Intellectual Property Rights in or on each deliverable. The Contractor must record that Canada has licensed Intellectual Property Rights as per Contract No. XXXXX, and must state that the deliverable contains only Background Information, and will identify the Contractor (if applicable) and each applicable grantor to the Contractor of those rights in the Background Information.

4.4.4.3 **For deliverables that consist of Background Information and Foreground Information**, the Contractor must include a notice of Intellectual Property Rights in or on each deliverable, such that the Foreground Information and the Background Information may be distinguished from each other. The Contractor must record that Canada has licensed Intellectual Property Rights as per Contract No. XXXXX, and must identify the Contractor (if applicable) and each applicable grantor to the Contractor of those rights in the Background Information and in the Foreground Information.

4.4.5 Official Language Requirements

4.4.5.1 The Contractor must deliver all Technical Publications in English and Canadian French (unless indicated above).

4.4.5.2 The Contractor must have all Technical Publications translated by certified translators, such as members of an authorized provincial association of translators, to ensure the quality of translated text.

4.4.5.3 In bilingual publications, the Contractor must use the same images within the French and English versions, except for any software-based images (such as screenshots) if that software's language can be selected between English and French. In such a case, the Contractor must use the software-based images in the language of the text they supplement.

4.4.5.4 The Contractor must ensure all translations are consistent with approved DND terminology. Approved terminology sources, in order of priority, are as follows:

4.4.5.4.1 Canadian Oxford Dictionary Second Edition (for English);

4.4.5.4.2 *Le Petit Robert Edition 2017* (for French);

4.4.5.4.3 Termium, PSPC Translation Bureau Linguistic Data Bank (http://www.termiumplus.gc.ca/);

4.4.5.4.4 International Electrotechnical Vocabulary (www.electropedia.org)

4.4.5.5 The Contractor must prepare and provide, for approval by the ILSM, a completed DND2515 "Certificate Of Translation Accuracy Check" form for each second-language publication produced under para 4.4.1.

4.4.5.6 The Contractor must review and accept responsibility for the validity of all (both their own and all sub-Contractors') information found in the Technical Publications.

4.5 Provisioning Documentation

4.5.1 The Provisioning Documentation (PD) lists and describes in detail the parts that make up the SUGVS as well as all specialized and specific items required to support the use and maintenance of the SUGVS. The PD allows the SUGVS's Integrated Logistics Support Manager (ILSM) to plan and implement a sparing and support strategy.

4.5.2 Included in the PD are all the procurable parts — either from the Contractor or a third-party — of the SUGVS to the lowest replaceable unit. Also considered procurable parts are the consumables required to operate and maintain the SUGVS (chemicals, specific lubricants,

etc.) and specialized equipment (special tools, training aids, transport containers, etc.) specific to the SUGVS.

4.5.3 The Contractor must prepare and deliver the following Provisioning Documentation:

4.5.3.1 Provisioning Parts Breakdown

4.5.3.1.1 The Contractor must provide a Provisioning Parts Breakdown IAW CDRL SUGVS-ILS-209 at Appendix A2.2 (page 33) and its associated DID SUGVS-ILS-209 at Appendix A3.15 (page 82) to this ANNEX A.

4.5.3.2 Supplementary Provisioning Technical Documentation

4.5.3.2.1 The Contractor must provide Supplementary Provisioning Technical Documentation IAW CDRL SUGVS-ILS-210 at Appendix A2.2 (page 33) and its associated DID SUGVS-ILS-210 at Appendix A3.16 (page 84) to this ANNEX A.

4.5.3.3 Materiel Identification Data Set

4.5.3.3.1 The Contractor must provide a Materiel Identification Data Set (MIDS) IAW CDRL SUGVS-ILS-211 at Appendix A2.2 (page 33) to Annex A, and its associated DID SUGVS-ILS-211 at Appendix A3.17 (page 85) to this ANNEX A.

4.5.4 The Contractor must review and accept responsibility for the validity of all (both their own and all sub-Contractors') information found in the Provisioning Documentation.

4.6 Initial Provisioning Conference

4.6.1 The Contractor must hold and chair an Initial Provisioning Conference (IPC). The IPC will occur after the Contractor has delivered Provisioning Documentation (PD) suitable for a successful IPC as determined by the DND ILS Manager.

4.6.2 The purpose of an IPC is to allow DND to verify that the Provisioning Documentation reflects the current and complete configuration of the equipment being procured by comparing it against the Illustrated Parts Manual and Supplementary Provisioning Technical Documentation. It is also used to select the range of spares required to support the system during an initial period of service of two (2) years. For this purpose, the Contractor must provide:

4.6.2.1 A suitable conference facility with projector(s), and three (3) unrestricted, hard-wired, broadband Internet access points through Ethernet (RJ45) connections;

4.6.2.2 Engineering and product support assistance;

4.6.2.3 The equipment for physical examination;

4.6.2.4 Engineering, reliability and maintainability data; and

4.6.2.5 Modification data, if applicable.

4.6.3 Refer to Meeting Documentation requirements found at ANNEX A para. 3.4.5.

4.7 Identification Plates

4.7.1 The Contractor must provide Identification Plates – Design Template & Populated Designs IAW CDRL SUGVS-ILS-212 at Appendix A2.2 (page 33) and its associated DID SUGVS-ILS-212 at Appendix A3.18 (page 86) to this ANNEX A.

4.7.2 The Contractor must attach Identification Plates to the following components for ease of tracking within the Canadian Forces Supply System:

4.7.2.1 Prime Equipment;

4.7.2.2 Spares;

4.7.2.3 STTE;

4.7.2.4 Training Equipment;

4.7.2.5 Transportation, Shipping, Storage Containers that are not single-use;

4.7.2.6 Support Equipment (excluding common tools), and

4.7.2.7 Automatic Test Equipment.

4.7.3 Unique Identification (UID) is the allocation of a unique number to an individual item using a standard procedure which is globally accepted. UID makes it possible to store and exchange data on an item's usage and maintenance history using national and international systems. UID can be used in the logistics chain to track and trace materiel more effectively. Implementing UID-marking will lead to the optimization of the logistical footprint.

4.7.4 The Contractor must generate and affix Unique Item Identifier(s), in accordance with STANAG 2290 Edition 2 - NATO UNIQUE IDENTIFICATION OF ITEMS, on the Identification Plates of the following serially managed items, and be of such quality as to remain machine readable for the expected life of the item:

4.7.4.1 The SUGV (see A1.1.1.2.1);

4.7.4.2 The CCS (see A1.1.1.2.2);

4.7.4.3 The Hard Transport Container (see A1.1.1.2.9);

4.7.4.4 All components that require calibration; and

4.7.4.5 All components that may require software or firmware updates.

4.8 Controlled & Non-Controlled Goods List

4.8.1 The Contractor must provide the Controlled & Non-Controlled Goods List with the Demilitarization Code (DMC) IAW SUGVS-ILS-213 at Appendix A2.2 (page 33) and its associated DID SUGVS-ILS-213 at Appendix A3.19 (page 88) to this ANNEX A.

4.9 Identification Labels for Storage & Shipment and Packaging Codes

4.9.1 The Contractor must supply all parts and equipment, packaged and packed as per D-LM-008-001/SF-001 following:

4.9.1.1 Level B Limited Military Package;

4.9.1.2 Level B Limited Military Pack;

4.9.2 The Contractor must label all packaging, produced under 4.9.1 above, as per D-LM-008-002/SF-001, using D-LM-008-011/SF-001 to prepare the required codes for packaging and preservation.

4.9.3 The Contractor must provide Identification Labels for Storage & Shipment and Packaging Codes IAW CDRL SUGVS-ILS-214 at Appendix A2.2 (page 33) to Annex A, and its associated DID SUGVS-ILS-214 at Appendix A3.20 (page 90) to this ANNEX A.

4.9.4 For serially managed items, the Contractor must apply the Unique Item Identifier(s), in a machine readable form, to the outside of any package of uniquely identified materiel where the UID data matrix is not easily machine-readable through the packaging material.

4.9.4.1 The Unique Item Identifier and its component data elements are to be replicated in a PDF 417 barcode in accordance with STANAG 2290 (Edition 2).

4.10 List of Items to be Supported (for Support SOW)

4.10.1 The Contractor must provide a List of Items to be Supported IAW CDRL SUGVS-ILS-215 at Appendix A2.2 (page 33) to Annex A, and its associated DID SUGVS-ILS-215 at Appendix A3.21 (page 92) to this ANNEX A.

4.11 Training Sessions

4.11.1 The Contractor must provide Training Sessions after delivery of the first SUGVS.

4.11.1.1 Scheduling of Training Sessions will be done after contract award, and jointly planned between the DND and the Contractor.

4.11.2 The Contractor must provide Training Sessions consisting of: (Note: Quantity and location of sessions described in the deliverables table)

4.11.2.1 Seven (7) Operator Training Sessions (train-the-trainer type) for one (1) to twenty (20) students per course, with a course length of three (3) days.

4.11.2.2 Seven (7) Technician Training Sessions (train-the-trainer type) for one (1) to five (5) students per course, with a course length of five (5) days.

4.11.3 The Contractor must provide the Training Sessions in English. The instructor(s) must be bilingual or have assistance from a bilingual Subject Matter Expert in order to understand and answer questions from students in both official languages; English and Canadian French.

4.11.4 The Contractor must provide instructor(s) that are considered Subject Matter Experts on the SUGVS equipment being provided.

4.11.5 The Contractor must use the approved and accepted **Operator and Technician Training Packages** for the Training Sessions, and course lessons must follow the content found within those training packages.

4.11.6 The Contractor must provide the course material listed within the **Operator and Technician Training Package** CDRLs as being 'Issued to Students at Training Session(s)', and all course material and handouts must be provided in English and Canadian French.

4.11.7 The Contractor must use the SUGVS(s) and additional training material identified in the **Operator and Technician Training Package Instructor Lesson Plan**, for the Training Session.

4.11.7.1 The Contractor must provide the additional training material that is listed in the **Operator and Technician Training Package Instructor Lesson Plan** as 'supplied by the Contractor'.

4.11.7.2 The Contractor must set-up the SUGVS(s) and additional training material that is listed in the **Operator and Technician Training Package Instructor Lesson Plan** as 'supplied by the Contractor', for the Training Session.

5.0 ENVIRONMENTAL MANAGEMENT AND ASSESSMENT

5.1 General

5.1.1 In accordance with the Prohibition of Certain Toxic Substances Regulations (SOR/2012-285), the Contractor must not incorporate the substances listed under this regulation in any part of the equipment.

5.1.2 In accordance with the Prohibition of Asbestos and Products containing Asbestos Regulations (SOR/2018-196), the Contractor must offer asbestos-free equipment.

5.1.3 In accordance with the Federal Halocarbon Regulations (SOR/2003-289) and the Ozone-depleting Substances and Halocarbon Alternatives Regulations (SOR/2016-137), for any halocarbons that are incorporated into the equipment, the Contractor must comply with regulations SOR/2003-289 and SOR/2016-137. If such substances must be used, the Contractor must:

5.1.3.1 Inform the Technical Authority by identifying the substance(s).

5.1.3.2 Identify the specific location within the equipment and the quantity.

5.1.4 In accordance with the Products Containing Mercury Regulations (SOR/2014-254), if mercury is present in any part of the equipment, the Contractor must comply with the mercury content limit in regulation SOR/2014-254. If such substances must be used, the Contractor must:

5.1.4.1 Inform the Technical Authority by identifying the substance(s).

5.1.4.2 Identify the specific location within the equipment and the quantity.

5.1.5 In accordance with the Polychlorinated Biphenyls (PCBs) Regulations (SOR/2008-273), if PCBs are present in any part of the equipment, the Contractor must comply with the regulation, the Contractor must:

5.1.5.1 Inform the Technical Authority by identifying the substance(s).

5.1.5.2 Identify the specific location within the equipment and the quantity.

5.1.5.3 Certify that there is no technically or economically feasible PCB-free alternative.

5.2 Environmental Management System

5.2.1 The Contractor must implement and maintain an Environmental Management System which is consistent with the principles presented in ISO 14001. Certification to this standard is preferred but not mandatory.

5.2.2 The Contractor must have a formalized set of procedures and control measures in place to demonstrate environmental compliance and minimize environmental impact of the work.

5.2.3 Prior to the commencement of work, the Contractor must have in place an Emergency / Spill Response Plan and also processes and procedures for the identification, management, handling and disposal of all substances, pollutants and material covered by the applicable municipal, territorial, provincial, federal environmental protection statutes and regulations.

5.2.4 The Contractor must update the Equipment Environmental Assessment (EEA), after it is delivered, under the following circumstances:

5.2.4.1 There are changes related to the items identified on the Hazardous Substances & Chemical Products table; or

5.2.4.2 New items/components are introduced as a result of configuration changes or modifications that contain hazardous substances and chemical products identified in the EEA.

5.3 Environmental Packaging Labels

5.3.1 The Contractor must label and ship goods falling within the Hazardous Products Act, R.S.C. 1985, C. H-3 and regulation(s) there under, in accordance with the said Act and regulation(s).

5.3.1.1 The Contractor must clearly identify the contents of the hazardous material with labels, and the Safety Data Sheet must explain what those hazards are.

5.4 Equipment Environmental Assessment

5.4.1 The Contractor must prepare and submit an EEA IAW CDRL SUGVS-ILS-216 at Appendix A2.2 (page 33) to Annex A, and its associated DID SUGVS-ILS-216 at Appendix A3.22 (page 95) to this ANNEX A.

5.4.2 The Contractor may provide Commercial in Confidence information in a separate document.

6.0 TECHNICAL REQUIREMENTS

6.1 Overview

6.1.1 The Contractor must comply with all specified requirements of the SUGVS, stated in:

6.1.1.1 A1.0 APPENDIX: SUGVS TECHNICAL SPECIFICATION

A1.0 APPENDIX: SUGVS TECHNICAL SPECIFICATION

A1.1 System Requirements

A1.1.1 General

A1.1.1.1 The Small Unmanned Ground Vehicle System (SUGVS) must be based on proven, fielded equipment that is in-service with a North Atlantic Treaty Organization (NATO) or American, British, Canadian, Australian, New Zealand military partner or police agency of those countries.

A1.1.1.2 The SUGVS must consist of the following components, and is further described in detail under the **System Component Requirements** section:

A1.1.1.2.1 One (1) Small Unmanned Ground Vehicle (SUGV);

A1.1.1.2.2 One (1) Control and Communication System (CCS);

A1.1.1.2.3 Battery Sets for eight (8) hours of operation;

A1.1.1.2.4 One (1) Battery Charging System;

A1.1.1.2.5 One (1) Manipulator Arm and Gripper;

A1.1.1.2.6 Two (2) ABL-2000L Disruptor Adaptor;

A1.1.1.2.7 Two (2) ABL-3000L Disruptor Adaptor;

A1.1.1.2.8 Two (2) Needle Plus Disruptor Adaptor;

A1.1.1.2.9 Hard Transport Container(s) for the above components, not including the SUGV.

A1.1.1.3 The SUGVS must include (stored within the Hard Transport Container(s)) all tools required to setup and maintain the SUGVS in accordance with the **Operator Maintenance** Concept ANNEX A paragraph 4.1.1.1 (page 10).

A1.1.1.4 The SUGVS must include (stored within the Hard Transport Container(s), without needing to be folded or otherwise distorted from flat) the Technical Publication(s) listed within the CDRL(s) as being 'Issued with each SUGVS'.

A1.1.2 Transportability

A1.1.2.1 The SUGVS must be transportable by fixed and rotary wing aircraft, cargo ships, rail, and commercial and military wheeled vehicles on highways and cross-country.

A1.2 System Component Requirements

A1.2.1 SUGV

A1.2.1.1 Mobility

A1.2.1.1.1 The SUGV must maintain an average velocity of no less than four (4) km/h on level pavement or concrete surface.

A1.2.1.1.2 The SUGV must traverse smooth polished surfaces, hard road surfaces, mud, fine sand, snow and ice.

A1.2.1.1.3 The SUGV must climb and descend stairs composed of steps of no less than 216 mm of height with a stair angle of no less than 45 degree while carrying the minimum payload weight of 20kg with the arm at the retracted position.

A1.2.1.1.4 The SUGV must cross vertical obstacle walls of no less than 500mm in height, while carrying the minimum payload weight of 20kg, with arm in the retracted position.

A1.2.1.1.5 The SUGV must traverse a dry grass-covered side slope of no less than 25 degrees (approx. 47% grade), while carrying the minimum payload weight of 20kg with arm at the retracted position.

A1.2.1.1.6 The SUGV must climb and descend dry grass-covered slopes of no less than 40 degrees (approx. 84% grade), while carrying the minimum payload weight of 20kg with arm at the retracted position.

A1.2.1.1.7 The SUGV must ford water at a depth of no less than 300mm.

A1.2.1.1.8 The SUGV must hold position when not commanded to move, including when the SUGV is stopped on uneven ground or 40 degrees slopes (approx. 84% grade) and while carrying the minimum payload weight, of 20kg.

A1.2.1.2 Cameras

A1.2.1.2.1 The SUGV Cameras must have the following features:

A1.2.1.2.1.1 Colour image;

A1.2.1.2.1.2 Low light and near infrared illuminators;

A1.2.1.2.1.3 640x480 pixel or higher resolution;

A1.2.1.3 Field of View

A1.2.1.3.1 The SUGV must have an overall front field of view with the following:

A1.2.1.3.1.1 No less than a 60 degree horizontal field of view;

A1.2.1.3.1.2 No less than a 45 degree vertical field of view;

A1.2.1.3.2 The SUGV must have an overall rear field of view with the following:

A1.2.1.3.2.1 No less than a 60 degree horizontal field of view;

A1.2.1.3.2.2 No less than a 45 degree vertical field of view;

A1.2.1.4 Pan Tilt Camera

A1.2.1.4.1 The SUGV must have a Pan Tilt Camera with no less than the following features:

A1.2.1.4.1.1 Colour image;

A1.2.1.4.1.2 Low light and near infra-red illuminators;

A1.2.1.4.1.3 40X zoom;

A1.2.1.4.1.4 640x480 pixel or higher resolution.

A1.2.1.4.1.5 No less than a 60 degree vertical field of view;

A1.2.1.4.1.6 Pan no less than from -180 to +180 degrees (left and right);

A1.2.1.4.1.7 Tilt no less than from +90 to -90degrees (up and down);

A1.2.1.5 Voice Communication

A1.2.1.5.1 The SUGV must have integrated two-way audio communication allowing communication between personnel on the ground around the SUGV and the operator of the CCS.

A1.2.1.6 GPS

A1.2.1.6.1 The SUGV must have a Global Positioning system indicating the SUGV position when operating outside. No map is required, just the GPS coordinates in Military Grid Reference System.

A1.2.1.7 Firing Circuits

A1.2.1.7.1 The SUGV must have no less than two (2) Firing Circuits that can initiate each of the following:

A1.2.1.7.1.1 M6 Electric Detonator;

A1.2.1.7.1.2 ABL-2000L Disruptor;

A1.2.1.7.1.3 ABL-3000L Disruptor, and

A1.2.1.7.1.4 Needle Plus disruptor.

A1.2.1.7.2 The SUGV must have a built-in two (2) step action, to initiate each of the Firing Circuits. The first action is to arm the system, and the second action is the pressing of the fire button.

A1.2.1.7.3 The power must not be applied to the Firing Circuits prior to the activation of the first action (arm) in the two-step action (arm+fire).

A1.2.1.7.4 If the SUGV loses contact with the CCS, the SUGV must have a failsafe that removes power from the Firing Circuits (goes to a safe state) in no more than 60 seconds following the contact loss.

A1.2.1.7.5 The SUGV must have a feature to conduct continuity checks of each of the Firing Circuits (following the safety limits of EN 13763-26 2004 para 7.4.1), initiated from the CCS, when one of the items listed at para. A1.2.1.7.1 is connected to the Firing Circuits.

A1.2.1.7.6 The SUGV Firing Circuit must be protected (isolated) from an inadvertent activation when power is cycled to the SUGV.

A1.2.1.7.7 Electro-Magnetic Compatibility and Interference

A1.2.1.7.7.1 The SUGV must meet the requirements of RE102 IAW MIL-STD-461G, or other equivalent international standard.

A1.2.1.7.7.2 The SUGV must meet the requirements of RS103 IAW MIL-STD-461G, or other equivalent international standard, for Army Ground levels from 2 MHz to 18 GHz.

A1.2.1.8 Radio

A1.2.1.8.1 The SUGV must continually act as a mobile RF communication relay, in a Mobile Ad-hoc Network (MANET), to assist with communication connection with any other device in the MANET using an MPU5 or Embedded Modules Wave Relay radio system (from Persistent Systems) with the same programing in a non-line-of-sight, subterranean, or reinforced concrete buildings, or to extend the range in line-of-sight applications.

A1.2.1.8.2 The SUGV must use the MPU5 (NSN 5975-01-658-9155) or Embedded Module Wave Relay radio system with S-Band module NSN 5998-01-658-8999 (2200-2507 MHz) and L-Band module NSN 5895-01-662-2670 (1350-1390 MHz) to be interoperable with the current Canadian system.

A1.2.1.8.3 The SUGV radio must be programmable to use an IP scheme imposed by DND to be interoperable with the current Canadian system.

A1.2.1.8.4 The SUGV must have an Ethernet connection meeting IEEE Std. 802.3-2022 to set up the radio in a MANET.

A1.2.1.9 Fibre Optic Cable

A1.2.1.9.1 The SUGV must carry, feed-out and rewind (can be automatic or manual rewind) a Fibre Optic Cable of no less than 300m +/- 2m.

A1.2.1.10 Durability and Cleaning

A1.2.1.10.1 The SUGV, when equipped with the Manipulator Arm and Gripper, must have no less than an IP65 rating, or equivalent, IAW NEMA IEC 60529.

A1.2.1.10.2 The SUGV must allow cleaning of the exterior surfaces with hot and cold low-pressure water, steam and detergents, without wear, deterioration or damage.

A1.2.2 **CCS**

A1.2.2.1 Display

A1.2.2.1.1 The CCS screen size must be no less than 254mm on the diagonal.

A1.2.2.1.2 The CCS must have an image display with a HD resolution of no less than 640x480 pixels.

A1.2.2.1.3 The CCS must have an image display whose brightness is user-adjustable for daylight (no less than 1000 nits) and low light viewing.

A1.2.2.2 The CCS must have a 3D-rendered image of the SUGV showing real-time relative positions of the Manipulator Arm and Gripper.

A1.2.2.3 The CCS must add and remove a second simultaneous video feed from another camera to gain a better situational awareness of the operation.

A1.2.2.4 The CCS must record and store internally no less than 20 hours of videos and 1000 images concurrently.

A1.2.2.5 The CCS recorded data must be exportable to a portable computer using a USB port or SD card port.

A1.2.2.6 Durability

A1.2.2.6.1 The CCS must have no less than an IP64 rating, or equivalent, IAW NEMA IEC 60529.

A1.2.2.7 Radio

A1.2.2.7.1 The CCS must continually act as a mobile RF communication relay, in a MANET, to assist with communication connection with any other device in the MANET using an MPU5 or Embedded Modules Wave Relay radio system (from Persistent Systems) with the same programing in a non-line-of-sight, subterranean, or reinforced concrete buildings, or to extend the range in line-of-sight applications.

A1.2.2.7.2 The CCS must use the MPU5 (NSN 5975-01-658-9155) or Embedded Module Wave Relay radio system with S-Band module NSN 5998-01-658-8999 (2200-2507 MHz) and L-Band module NSN 5895-01-662-2670 (1350-1390 MHz) to be interoperable with the current Canadian system.

A1.2.2.7.3 The CCS must have user access to the Web Management Interface to setup the MPU5 or Embedded Module or alternatively permit the changing of all radio parameters through the CCS interface including:

A1.2.2.7.3.1 Frequency;

A1.2.2.7.3.2 Bandwidth;

A1.2.2.7.3.3 IP Scheme;

A1.2.2.7.3.4 Network Node List; and

A1.2.2.7.3.5 Encryption Key.

A1.2.2.7.4 The CCS must have a network visualization graphic showing the active nodes local to the SUGV with associated Signal to Noise Ratio (SNR) between the CCS and SUGV.

A1.2.2.7.5 The CCS must have a noise visualization graphic showing the signal strength between the nodes.

A1.2.2.7.6 The CCS Radio must be programmable to use an IP scheme imposed by DND to be interoperable with the current Canadian system.

A1.2.2.8 Fibre Optic Cable

A1.2.2.8.1 The CCS must have a Fibre Optic Cable connector and link to allow communication with and control of the SUGV.

A1.2.3 **Battery Sets**

A1.2.3.1 The SUGVS Battery Sets (SUGV, CCS, etc.) must provide no less than two (2) hours of operation at an approximate ideal temperature of 20ºC (+/- 3 ºC). Operation is defined as:

A1.2.3.1.1 Power-on and initialization sequence of the SUGV and CCS;

A1.2.3.1.2 Movement of the SUGV ‘down range’ for 100m, with periodic movements throughout the majority of the two (2) hours, and then returning back for 100m before the two (2) hours has expired, and

A1.2.3.1.3 Continuous video transmission (small fluctuations allowed) between the SUGV and CCS throughout the two (2) hours.

A1.2.3.2 The SUGVS must have enough Battery Sets for eight (8) hours of operation.

A1.2.3.3 The SUGVS Battery Sets must be replaced in no more than five (5) minutes.

A1.2.3.4 The SUGVS Battery Sets must be rechargeable when installed in the SUGV and CCS.

A1.2.4 **Battery Charging System**

A1.2.4.1 The Battery Charging System must include a universal power input of 110VAC – 220VAC, 50Hz – 60Hz, with a North American plug type.

A1.2.4.2 The Battery Charging System must be standalone from the SUGV and CCS, so they can be used while batteries are charging.

A1.2.4.3 The Battery Charging System must provide visual indications of battery charging in order to indicate when charging is in progress and when it is complete.

A1.2.4.4 The Battery Charging System full re-charge time for one (1) Battery Set (SUGV and CCS) must not exceed eight (8) hours, and must re-charge the Battery Set (SUGV and CCS) at the same time.

A1.2.4.5 The Battery Charging System must be certified CSA, CE, UL or equivalent.

A1.2.4.6 The Battery Charging System must recharge all batteries at the same time.

A1.2.5 **Manipulator Arm and Gripper**

A1.2.5.1 The Manipulator Arm and Gripper horizontal reach beyond the front of the SUGV must be no less than 1600mm (the horizontal reach must be done without an Arm Extension addition to the Manipulator Arm and Gripper).

A1.2.5.2 The Manipulator Arm and Gripper vertical reach must be no less than 2000mm, to reach aircraft overhead storage bins. The vertical reach can be done with an Arm Extension if the extension meets the following requirements:

A1.2.5.2.1 The Arm Extension must be a plug and play;

A1.2.5.2.2 The Arm Extension at maximum arm length must not reduce the manipulation precision of the SUGV gripper;

A1.2.5.2.3 The Arm Extension must keep the same lifting capacity without any degradation;

A1.2.5.2.4 The Arm Extension must also fire the ABL 2000L, ABL 3000L and the Needle Plus Disruptors, at the maximum vertical reach;

A1.2.5.2.5 The Arm Extension must use the same Gripper that is used on the Manipulator Arm and Gripper.

A1.2.5.2.6 The Arm Extension equipped with the Gripper must have the same gripper camera(s) providing the same video feedback without any degradation.

A1.2.5.2.7 The Arm Extension must be reinstalled and be functional within one (1) minute.

A1.2.5.3 Payload

A1.2.5.3.1 The Manipulator Arm and Gripper must lift from the ground and carry a smooth pipe of 155mm in diameter, with a weight of no less than 18kg, when the manipulator arm is fully retracted.

A1.2.5.3.2 The Manipulator Arm and Gripper must lift from the ground and carry a smooth pipe of 155mm diameter, with a weight of no less than a 7kg, when the Manipulator arm is fully extended to the front of the SUGV.

A1.2.5.4 Gripper Camera

A1.2.5.4.1 The Manipulator Arm and Gripper camera field of view at the maximum vertical height must inspect everywhere inside the aircraft overhead storage bin without an add-on attachment to the Manipulator Arm and Gripper, other than the Arm Extension (if required).

A1.2.5.4.2 The Manipulator Arm and Gripper camera must have a field of view with the following features:

A1.2.5.4.2.1 Colour image;

A1.2.5.4.2.2 Low-light and near infra-red illuminators;

A1.2.5.4.2.3 640x480 pixel or higher resolution;

A1.2.5.4.2.4 No less than a 60 degree horizontal field of view;

A1.2.5.4.2.5 No less than a 50 degree vertical field of view;

A1.2.5.4.2.6 Pan no less than -180 to +180degrees (left and right) (Panning can be met either through the camera itself panning or Manipulator Arm panning), and

A1.2.5.4.2.7 Tilt no less than +90 to -90 degrees (up and down) (Tilting can be met either through the camera itself tilting or Manipulator Arm tilting).

A1.2.5.5 Manipulator Arm

A1.2.5.5.1 The Manipulator Arm must have no less than the following features:

A1.2.5.5.1.1 Turret with no less than -180 to +180 degree horizontal rotation in either direction (left and right);

A1.2.5.5.1.2 Shoulder with no less than 180 degrees of freedom;

A1.2.5.5.1.3 Elbow with no less than 270 degrees of freedom;

A1.2.5.5.1.4 Wrist with no less than 300 degrees of freedom;

A1.2.5.5.1.5 Gripper rotation of no less than 360 degrees of freedom; and

A1.2.5.5.1.6 Gripper opening of no less than 155mm.

A1.2.5.6 The Manipulator Arm and Gripper must have no less than three (3) programmable and changeable poses, and three (3) factory pre-set poses allowing for rapid deployment or pack-up:

A1.2.5.6.1 Travelling pose;

A1.2.5.6.2 Weapon loading pose, and

A1.2.5.6.3 Storage pose.

A1.2.5.7 The Manipulator Arm and Gripper must carry and have two (2) disruptor mounts (carrying any possible mix between the three (3) disruptors), and sleeves if needed, for the following in-service barrel disruptors:

A1.2.5.7.1 Needle Plus (Recoil) (NSN: 1385-99-485-3385);

A1.2.5.7.2 ABL-2000L (Recoilless) (NSN: 1385-99-151-5469);

A1.2.5.7.3 ABL-3000L (Recoilless) (NSN: 1385-99-447-0479)

A1.2.5.8 Aiming Pointer and Range Finder

A1.2.5.8.1 The Manipulator Arm and Gripper must have a disruptor aiming pointer.

A1.2.5.8.1.1 This can be achieve by either the Manipulator Arm or Gripper camera, or by a laser pointer or equivalent system.

A1.2.5.8.2 The Manipulator Arm and Gripper aiming pointer must be viewable in daylight during a sunny day.

A1.2.5.8.3 The Manipulator Arm and Gripper must have a range finder to determine the distance between the disruptors and the target.

A1.2.6 **ABL-2000L Disruptor Adaptor**

A1.2.6.1 The SUGVS must fire the ABL-2000L Disruptor at all angles without damaging parts of the SUGV.

A1.2.7 **ABL-3000L Disruptor Adaptor**

A1.2.7.1 The SUGVS must fire the ABL-3000L Disruptor at all angles without damaging parts of the SUGV.

A1.2.8 **Needle Plus Disruptor Adaptor**

A1.2.8.1 The SUGVS must fire the Needle Plus Disruptor at all angles without damaging parts of the SUGV.

A1.2.9 **Hard Transport Container(s)**

A1.2.9.1 The Hard Transport Container(s) must have no less than an IP66 rating, or equivalent, IAW NEMA IEC 60529.

A1.3 Physical Requirements

A1.3.1 **Size**

A1.3.1.1 The SUGV width must be no more than 450mm, in order to fit in a commercial airplane aisle.

A1.3.2 **Weight**

A1.3.2.1 The SUGV, Manipulator Arm and Gripper, and Arm Extension if required, (not including the Fibre Optic Cable, Disruptor Mounts and CCS), with one (1) Battery Set, must not exceed 90kg in combined weight.

A1.3.3 **Colour**

A1.3.3.1 The SUGV must have a predominant exterior colour (so that it contributes to and does not compromise an operator’s camouflage) of:

A1.3.3.1.1 Flat/matte finish green;

A1.3.3.1.2 Flat/matte finish earth tone;

A1.3.3.1.3 Flat/matte finish grey, or

A1.3.3.1.4 Flat/matte finish black.

A1.4 Environmental/Climatic Requirements

A1.4.1 Climatic Conditions

A1.4.1.1 The SUGVS must operate in temperatures from –20ºC to +39ºC with no reduction in performance and durability.

A1.4.1.2 The SUGVS, without the batteries, must be stored in temperatures from –50ºC to +50ºC with no reduction in performance and durability.

A1.4.1.3 The SUGVS must operate in relative humidity from 5% to 100%.

A1.4.2 Atmospheric Conditions

A1.4.2.1 The SUGV, CCS, and Manipulator Arm and Gripper must operate in blowing sand and dust caused by wind gusts up to 40 km/h over a period of no less than one (1) hour.

A2.0 APPENDIX: CONTRACT DATA REQUIREMENTS LIST

A2.1 Management and Explanation of the CDRL

A2.1.1 Management of Data Items

A2.1.1.1 The Contractor must review, update and deliver amendments, or confirm the continuing accuracy of data items annotated with a maintenance period, in accordance with the CDRL.

A2.1.1.2 The Contractor must deliver amended, reissued or resubmitted data items to the location(s) and in the format and quantities specified in the CDRL for the initial submission of the data items.

A2.1.2 Explanation of the CDRL

A2.1.2.1 **CDRL Line Number** – This field provides the unique sequential number that identifies each data item within different functional groups (eg, PM-001, SE-101, & ILS-201).

A2.1.2.2 **CDRL Title** – This field identifies the title of the data item.

A2.1.2.3 **SOW Para Ref** – This field shows the paragraph in the SOW where the data item is stipulated. There may be multiple references to the data item in the SOW, but generally only the first (or one) reference is shown in the CDRL.

A2.1.2.4 **Version** – This field identifies the particular delivery of a data item during its lifecycle (ie, draft, final).

A2.1.2.5 **Delivery Schedule** – This field specifies the date(s) and/or events by which the data item is required to be delivered. The date of delivery applies to all delivery locations and quantities unless otherwise specified. Following are some of the abbreviations and symbols used with this column:

A2.1.2.5.1 'KO' means the Kick-Off Meeting date;

A2.1.2.5.2 Numerals indicate the number of Calendar Days, unless specified otherwise;

A2.1.2.5.3 '+' means after the specified date or event; and

A2.1.2.5.4 '-' means before the specified date or event.

A2.1.2.5.5 If a data item is required to be delivered before an event having a duration of greater than one day, delivery date must be calculated from the first day of that event. If a data item is required to be delivered after an event having a duration of greater than one day, the delivery date must be calculated from the last day of that event.

A2.1.2.6 **Quantity** – This field specifies the total number of data items to be delivered to the associated delivery location(s), including the number of hard (H) and soft (S) copies. When both hard and soft copies are requested, the action copy will be indicated in the notes column.

A2.1.2.7 **Addressee** – This field shows the short title of the DND representative to whom the hard and soft copies of the data items must be delivered. The action hard copy of the data item must be delivered to the first nominated location in this field.

A2.1.2.8 **Data Item Description Reference** – This field provides the identification of the DID with which the data item must comply.

A2.1.2.9 **DND Action Period** – This field defines the number of Calendar Days available to the DND to action the data item and respond to the Contractor, if that action requires a response.

A2.1.2.9.1 The period begins upon the date the action copy of the data item is received at the first nominated addressee.

A2.1.2.9.2 The action period applies to all deliveries, including first deliveries, amendments and re-issues. If a data item is delivered earlier than the first delivery date shown in the CDRL, the DND is not obliged to action it until after that date. If the action period states 'by MSR' for a data item delivered prior to a Mandated System Review (MSR), the action period ends when the minutes for that MSR are approved.

A2.1.2.10 **DND Action Required** – This field indicates the purpose for which the data item is being submitted to the DND, which will either be for Review, Approval or Acceptance.

A2.1.2.11 **Maintenance** – This field specifies either the timings or the time intervals, after each delivery, at which the data item must be reviewed by the Contractor and either have its continuing accuracy status confirmed in writing, or be updated and reissued. The Maintenance column does not apply to draft or preliminary versions of data items. The following abbreviations and codes are applicable to this column:

A2.1.2.11.1 xM – every x calendar months;

A2.1.2.11.2 R – to enable it to be considered at each MSR set out in the System Engineering program;

A2.1.2.11.3 SA – to enable it to be provided for the purposes of conducting Acceptance of each System;

A2.1.2.11.4 FA – to enable it to be provided for the purposes of Final Acceptance; and

A2.1.2.11.5 NA or blank – not applicable.

A2.1.2.12 Notes: Where necessary, additional explanatory information relating to a CDRL data item is provided in this column.

A2.2 CDRL Item List

CDRL #	CDRL Title	SOW Para Ref	Version	Delivery Schedule	Qty	Addressee	DID # and Ref	DND Action Period	DND Action Required	Maint	Notes
SUGVS-PM-001	Contract Master Schedule	Para. 3.2.1 (pg. 8)	Draft	KO	1S	TA	SUGVS-PM-001	14	Review		Update aligned with Contract Status Report
			Revised or Final	DND Comments + 14	1S	TA, CA, PA, ILSM	App. A3.3 (pg. 41)	7	Review or Acceptance		
			Updates	With Contract Status Report, when changed	1S	TA, CA, PA, ILSM			Review		
SUGVS-PM-002	Contract Status Report	Para. 3.3.1 (pg. 8)	Draft	KO+28	1S	TA, ILSM	SUGVS-PM-002	14	Review		
			Revised or Final	DND Comments + 7	1S	TA, CA, PA, ILSM	App. A3.4 (pg. 43)	7	Review or Acceptance		
			Updates	Monthly	1S	TA, CA, PA, ILSM			Review		
SUGVS-PM-003	Meeting Agenda	Para. 3.4.5.1.1 (pg. 9)	Draft	Meeting Date - 7	1S	CA, TA, PA	SUGVS-PM-003	5	Review		
			Revised	Meeting Date - 1	1S	CA, TA, PA	App. A3.5 (pg. 44)				
			Final	Meeting Date	1H	CA, TA, PA		7	Review or Acceptance		
SUGVS-PM-004	Meeting Minutes	Para. 3.4.5.1.2 (pg. 9)	Draft	Meeting Date + 7	1S	CA, TA, PA	SUGVS-PM-004	7	Review		
			Revised or Final	DND Comments + 7	1S	CA, TA, PA	App. A3.6 (pg. 46)	7	Review or Acceptance		
SUGVS-ILS-201	Application of Spectrum Supportability	Para. 4.3.2 (pg. 10)	Draft	KO + 21	1S	TA	SUGVS-ILS-201	28	Review		
			Revised or Final	DND Comments + 14	1S	TA	App. A3.7 (pg. 47)	14	Review or Acceptance		
SUGVS-ILS-202	Operator Manual	Para. 4.4.1.1.1 (pg. 11)	Draft English	KO + 56	1S, 1H per comp	ILSM	SUGVS-ILS-202	21	Review		Hard copy is the action copy. One (1) soft and hard copy per component is required.

CDRL #	CDRL Title	SOW Para Ref	Version	Delivery Schedule	Qty	Addressee	DID # and Ref	DND Action Period	DND Action Required	Maint	Notes
			Revised or Final English	DND Comments + 21	1S, 1H per comp	ILSM	App. A3.8 (pg. 68)	14	Review or Acceptance		
			Draft Bilingual	Acceptance of English Operator Manual + 42	1S, 1H per comp	ILSM		14	Review		
			Revised or Final Bilingual	DND Comments + 14	1S, 1H per comp	ILSM		14	Review or Acceptance		
			Final		1H	Issued with each SUGVS					
SUGVS-ILS-203	Operator Quick Reference Card	Para. 4.4.1.2.1 (pg. 11)	Draft English	With English Draft Operator Manual	1S, 1H per comp	ILSM	SUGVS-ILS-203	14	Review		Hard copy is the action copy. One (1) soft and hard copy per component is required.
			Revised or Final English	DND Comments + 14	1S, 1H per comp	ILSM	App. A3.9 (pg. 70)	14	Review or Acceptance		
			Draft Bilingual	With Bilingual Draft Operator Manual	1S, 1H per comp	ILSM		14	Review		
			Revised or Final Bilingual	DND Comments + 14	1S, 1H per comp	ILSM		14	Review or Acceptance		
			Final		1H	Issued with each SUGVS					
SUGVS-ILS-204	Repair Manual	Para. 4.4.1.3.1 (pg. 11)	Draft English	KO + 63	1S, 1H per comp	ILSM	SUGVS-ILS-204	21	Review		Hard copy is the action copy. One (1) soft and hard copy per component is required.
			Revised or Final English	DND Comments + 21	1S, 1H per comp	ILSM	App. A3.10 (pg. 72)	14	Review or Acceptance		
			Draft Bilingual	Acceptance of English Repair Manual + 42	1S, 1H per comp	ILSM		14	Review		

CDRL #	CDRL Title	SOW Para Ref	Version	Delivery Schedule	Qty	Addressee	DID # and Ref	DND Action Period	DND Action Required	Maint	Notes
			Revised or Final Bilingual	DND Comments + 14	1S, 1H per comp	ILSM		14	Review or Acceptance		
			Final		0H	Issued with each SUGVS					
SUGVS-ILS-205	Illustrated Parts Manual	Para. 4.4.1.4.1 (pg. 11)	Draft	KO + 49	1S, 1H	ILSM	SUGVS-ILS-205	14	Review		Hard copy is the action copy.
			Revised or Final	DND Comments + 14	1S, 3H	ILSM	App. A3.11 (pg. 74)	14	Review or Acceptance		
			Updates	If required after the IPC Meeting	1S, 1H	ILSM		14	Review or Acceptance		
SUGVS-ILS-206	Operator Training Package	Para. 4.4.1.5.1 (pg. 11)	Draft English	Acceptance of English Operator Manual + 14	1S, 1H	ILSM	SUGVS-ILS-206	14	Review		Hard copy is the action copy.
			Revised or Final English	DND Comments + 14	1S, 1H	ILSM	App. A3.12 (pg. 76)	14	Review or Acceptance		
			Draft Bilingual	Acceptance of Bilingual Operator Manual + 42	1S, 1H	ILSM		14	Review		
			Revised or Final Bilingual	DND Comments + 14	1S, 1H	ILSM		14	Review or Acceptance		
			See notes		1S, 1H	Issued to Students at the Training Session(s)					Hard copy of Student Handout only, and soft copy on CD of the Operator Training Package.
SUGVS-ILS-207	Technician Training Package	Para. 4.4.1.6.1 (pg. 11)	Draft English	Acceptance of English Repair Manual + 14	1S, 1H	ILSM	SUGVS-ILS-207	14	Review		Hard copy is the action copy.
			Revised or Final English	DND Comments + 14	1S, 1H	ILSM	App. A3.13 (pg. 78)	14	Review or Acceptance		

CDRL #	CDRL Title	SOW Para Ref	Version	Delivery Schedule	Qty	Addressee	DID # and Ref	DND Action Period	DND Action Required	Maint	Notes
			Draft Bilingual	Acceptance of Bilingual Repair Manual + 42	1S, 1H	ILSM		14	Review		
			Revised or Final Bilingual	DND Comments + 14	1S, 1H	ILSM		14	Review or Acceptance		
			See notes		1S, 1H	Issued to Students at the Training Session(s)					Hard copy of Student Handout only, and soft copy on CD of the Technician Training Package.
SUGVS-ILS-208	Preservation, Storage and Reactivation Instructions	Para. 4.4.1.7.1 (pg. 11)	Draft English	KO + 70	1S, 1H	ILSM	SUGVS-ILS-208	14	Review		Hard copy is the action copy.
			Revised or Final English	DND Comments + 14	1S, 1H	ILSM	App. A3.14 (pg. 80)	14	Review or Acceptance		
			Draft Bilingual	Acceptance of English Preservation, Storage and Reactivation Instructions + 28	1S, 1H	ILSM		14	Review		
			Revised or Final Bilingual	DND Comments + 14	1S, 1H	ILSM		14	Review or Acceptance		
SUGVS-ILS-209	Provisioning Parts Breakdown	Para. 4.5.3.1.1 (pg. 14)	Draft	Same time as the draft Illustrated Parts Manual	1S	ILSM	SUGVS-ILS-209	14	Review		Soft copy is the action copy.
			Revised or Final	[DND Comments + 14	1S	ILSM	App. A3.15 (pg. 82)	14	Review or Acceptance		
			Updates	If required after the IPC Meeting	1S	ILSM		14	Review or Acceptance		

CDRL #	CDRL Title	SOW Para Ref	Version	Delivery Schedule	Qty	Addressee	DID # and Ref	DND Action Period	DND Action Required	Maint	Notes
SUGVS-ILS-210	Supplementary Provisioning Technical Documentation	Para. 4.5.3.2.1 (pg. 14)	Draft	Same time as the draft Provisioning Parts Breakdown	1S	ILSM	SUGVS-ILS-210	14	Review		Soft copy is the action copy.
			Revised	IPC Meeting	1S	ILSM	App. A3.16 (pg. 84)	14	Review		
			Revised or Final	DND Comments + 14	1S	ILSM		14	Review or Acceptance		Revised or Final version must include changes resulting from decisions taken during the IPC Meeting.
SUGVS-ILS-211	Material Identification Data Set	Para. 4.5.3.3.1 (pg. 14)	Draft	Same time as the draft Provisioning Parts Breakdown	1S	ILSM	SUGVS-ILS-211	14	Review		Soft copy is the action copy.
			Revised or Final	DND Comments + 14	1S	ILSM	App. A3.17 (pg. 85)	14	Review or Acceptance		
			Updates - For new items only	If Canada purchases additional serialized items (options or spares)	1S	ILSM		14	Review or Acceptance		
SUGVS-ILS-212	Identification Plates – Design Template & Populated Designs	Para. 4.7.1 (pg. 15)	Draft Design Template	KO + 28	1S, 1H	ILSM	SUGVS-ILS-212	14	Review		Hard copy is the action copy.
			Revised or Final Design Template	DND Comments + 14	1S, 1H	ILSM	App. A3.18 (pg. 86)	14	Review or Acceptance		
			Draft Populated Designs	Acceptance of Design Template + 28	1S, 1H	ILSM		14	Review		

CDRL #	CDRL Title	SOW Para Ref	Version	Delivery Schedule	Qty	Addressee	DID # and Ref	DND Action Period	DND Action Required	Maint	Notes
			Revised or Final Populated Designs	DND Comments + 14	1S, 1H	ILSM		14	Review or Acceptance		
SUGVS-ILS-213	Controlled & Non-Controlled Goods List	Para. 4.8.1 (pg. 15)	Draft	Same time as the draft Provisioning Parts Breakdown	1S	ILSM	SUGVS-ILS-213	14	Review		Soft copy is the action copy.
			Revised or Final	DND Comments + 14	1S, 1H	ILSM	App. A3.19 (pg. 88)	14	Review or Acceptance		
SUGVS-ILS-214	Identification Labels for Storage & Shipment and Packaging Codes	Para. 4.9.3 (pg. 16)	Draft Labels	KO + 42	1S	ILSM	SUGVS-ILS-214	28	Review		
			Revised or Final Labels	DND Comments + 14	1S	ILSM	App. A3.20 (pg. 90)	14	Review or Acceptance		
			Draft Codes	Provision of NSNs + 35	1S	ILSM		21	Review		
			Revised or Final Codes	DND Comments + 14	1S	ILSM		14	Review or Acceptance		
			Updates	If required after the a range of spares are chosen by DND	1S	ILSM		14	Review or Acceptance		
SUGVS-ILS-215	List of Items to be Supported	Para. 4.10.1 (pg. 16)	Draft	Final acceptance of the Illustrated Parts Manual, PPB and SPTD + 28	1S	ILSM	SUGVS-ILS-215	14	Review		
			Revised or Final	DND Comments + 14	1S	ILSM	App. A3.21 (pg. 92)	14	Review or Acceptance		
SUGVS-ILS-216	Equipment Environmental Assessment	Para. 5.4.1 (pg. 19)	Draft	KO + 84	1S	TA	SUGVS-ILS-216	56	Review		

CDRL #	CDRL Title	SOW Para Ref	Version	Delivery Schedule	Qty	Addressee	DID # and Ref	DND Action Period	DND Action Required	Maint	Notes
			Revised or Final	DND Comments + 28	1S	TA	App. A3.22 (pg. 95)	14	Review or Acceptance		

A3.0 APPENDIX: DATA ITEM DESCRIPTION

A3.1 Data Deliverable Format

A3.1.1 **Unless otherwise specified as a specific requirement, the Contractor must deliver all of the soft copies of data deliverables, in formats compatible with the office software currently in use by the DND as listed:**

A3.1.1.1 Microsoft (MS) Windows 10 Enterprise Operating System (OS);

A3.1.1.2 MS Edge 2019;

A3.1.1.3 MS Office Professional Plus 2013 (Word, Excel, Access, PowerPoint and Outlook); and

A3.1.1.4 Foxit PhantomPDF version 10;

A3.2 DID Table Definitions

The following section defines the various blocks of information found on the Data Item Description (DID) forms:

BLOCK 1 – TITLE
The title of the data item for the DID.

BLOCK 2 - IDENTIFICATION NUMBER
The Data Item Description (DID) number, consisting of a sequential three-digit number and prefixed with an abbreviation code, to uniquely identify the DID. Note that the 001-099 series is reserved to Project Management (PM) DIDs, the 101-199 series is reserved to Systems Engineering (SE) DIDs and the 201-299 series is reserved to Integrated Logistics Support (ILS) DIDs. The abbreviation codes used for the prefix are:

“PM” for Project Management
“SE” for Systems Engineering
“ILS” for Integrated Logistics Support

BLOCK 3 - DESCRIPTION
Provides a general description of the data content requirements.

BLOCK 4 – RELATED DOCUMENT(S)
Provides a listing of the related documents and specifications associated with and required to produce this DID.

BLOCK 5 - CONTRACT REFERENCE
The specific paragraph numbers from the Contract Statement of Work and CDRL to assist in identifying the work effort associated with the data item.

BLOCK 6 - PREPARATION INSTRUCTIONS
Provides the preparation instructions for the content and format requirements for the DID.

A3.3 DID – Contract Master Schedule

DATA ITEM DESCRIPTION	
1. TITLE **Contract Master Schedule (CMS)**	2. IDENTIFICATION NUMBER **DID SUGVS-PM-001**
3. DESCRIPTION The CMS describes the Contractor's planned sequence of activities, milestones and decision points to enable the objectives of the Contract to be met. Additionally, the CMS defines the current Contract schedule status, comparing the current schedule to the contracted schedule.	
4. RELATED DOCUMENTS	5. CONTRACT REFERENCE **SOW**: **Para. 3.2.1 (pg. 8)** **CDRL**: **App. A2.2 (pg. 33)**

6. PREPARATION INSTRUCTIONS

6.1. **CONTENT**

6.1.1. **Data to be Included**

6.1.1.1. The CMS must graphically depict the contract schedule and progress at the activity level.

6.1.1.2. The CMS must graphically present or otherwise identify:

6.1.1.2.1. activities and their estimated durations;

6.1.1.2.2. milestones, including milestones in the contract;

6.1.1.2.3. the relationships and dependencies between activities and milestones to be accomplished by or for the Contractor in the performance of its obligations under the contract;

6.1.1.2.4. critical and non-critical paths;

6.1.1.2.5. floats available on all activities and milestones;

6.1.1.2.6. allocated resources for each activity; and

6.1.1.2.7. notes on the use of the CMS, including a glossary of terms and symbols used.

6.1.1.3. The CMS must include:

6.1.1.3.1. other major events, as agreed between the Contractor and DND;

6.1.1.3.2. DND tasks, where such tasks interface with, and may affect, Contractor tasks;

6.2. **SOFT COPY FORMAT**

6.2.1. The CMS must be submitted as a PDF file type.

6.2.2. The CMS must be displayed in a variety of formats:

6.2.2.1. a Gantt chart;

6.2.2.2. a list of all tasks, together with their planned and actual start and completion dates; and

6.2.2.3. a listing of milestones (including Milestones in the contract), together with their original, rescheduled, forecast and actual completion dates.

6.2.3. **Soft Copy format submission size below 7MB** – The CMS PDF may be submitted via email as follows:

6.2.3.1. To Field: As per the related CDRL section 9.A. Addressee, as identified in the contract.

6.2.3.2. Subject Field: SUGVS-PM-001 – CMS – [Rev #] – [Date of Issue]

6.2.4. **Soft Copy format submission size at or above 7MB** - The CMS PDF must be submitted on CD or DVD media and be labelled as follows:

6.2.4.1. Small Unmanned Ground Vehicle System

6.2.4.2. CMS;

6.2.4.3. SUGVS-PM-001;

6.2.4.4. The Revision number, and

6.2.4.5. The date of issue.

A3.4 DID – Contract Status Report

DATA ITEM DESCRIPTION	
1. TITLE **Contract Status Report (CSR)**	2. IDENTIFICATION NUMBER **DID SUGVS-PM-002**
3. DESCRIPTION The Contract Status Report (CSR) is the principal statement and explanation of the status of the contract at the end of each reporting period, and will summarize the Contractor's progress and activities in relation to the Project milestones, schedule, and contract data deliverables.	
4. RELATED DOCUMENTS	5. CONTRACT REFERENCE **SOW**: **Para. 3.3.1 (pg. 8)** **CDRL**: **App. A2.2 (pg. 33)**

6. PREPARATION INSTRUCTIONS

6.1. **CONTENT**

6.1.1. The CSR must identify the date at which the CSR is valid, and the time period since the status date of the previous CSR (the 'reporting period').

6.1.2. The CSR must include the following information:

6.1.2.1. A summary of significant work activities (including those undertaken by major Subcontractors) undertaken during the reporting period;

6.1.2.2. A summary of significant work activities (including those undertaken by major Subcontractors) expected to be undertaken in the next reporting period.

6.1.2.3. A summary of progress (including progress by major Subcontractors) against the CMS.

6.1.2.4. A narrative detailing progress against milestones, expected date of completion of near milestones, problem areas and work-around plans where required;

6.1.2.5. A status report on contract data deliverable end items as called up in the CDRLs;

6.1.2.6. An Integrated Logistic Support (ILS) report, giving the status of ILS activity;

6.1.2.7. A list of correspondence that requires a response from the DND/PSPC, but for which no response has been received; and

6.1.2.8. A list of DND/PSPC correspondence to the Contractor for which a response is outstanding, and an estimate of the response date.

6.2. **SOFT COPY FORMAT**

6.2.1. The CSR must be submitted as a PDF file type.

6.2.2. The CSR PDF must be submitted via email (submission size not to exceed 7MB) as follows:

6.2.2.1. To Field: As per the related CDRL section 9.A. Addressee, as identified in the contract.

6.2.2.2. Subject Field: SUGVS-PM-002 – CSR – [Rev #] – [Date of Issue]

A3.5 DID – Meeting Agenda

DATA ITEM DESCRIPTION	
1. TITLE **Meeting Agenda**	2. IDENTIFICATION NUMBER **DID SUGVS-PM-003**
3. DESCRIPTION The Meeting Agenda contains the venue information and identifies the discussion items to be covered at meetings.	
4. RELATED DOCUMENTS	5. CONTRACT REFERENCE **SOW**: **Para. 3.4.5.1.1 (pg. 9)** **CDRL**: **App. A2.2 (pg. 33)**

6. PREPARATION INSTRUCTIONS

6.1. **CONTENT**

6.1.1. The Meeting Agenda must set forth the venue, identify all requirements and list the discussion items to be covered at the meeting.

6.1.2. Venue. The Meeting Agenda must address the venue as follows:

6.1.2.1. Meeting Identification Number;

6.1.2.2. Purpose;

6.1.2.3. Date, time and location; and

6.1.2.4. Attendees.

6.1.3. Discussion items. The Meeting Agenda must address the discussion items through the following sections:

6.1.3.1. Opening Remarks;

6.1.3.2. Agenda Review;

6.1.3.3. Review of Previous Minutes;

6.1.3.4. Opened Discussion Items;

6.1.3.5. New Discussion Items;

6.1.3.6. Review of Action Items;

6.1.3.7. Next Venue; and

6.1.3.8. Closing Remarks.

6.2. **HARD COPY FORMAT**

6.2.1. The Meeting Agenda must be printed on paper with these characteristics:

6.2.1.1. Weight of no less than 90 gsm;

6.2.1.2. Brightness of no less than 96 ISO brightness;

6.3. **SOFT COPY FORMAT**

6.3.1. The Meeting Agenda must be submitted as a MS Word file type.

6.3.2. The Meeting Agenda MS Word document must be submitted via email (submission size not to exceed 7MB) as follows:

6.3.2.1. To Field: As per the related CDRL section 9.A. Addressee, as identified in the contract.

6.3.2.2. Subject Field: SUGVS-PM-003 – Meeting Agenda – [Rev #] – [Date of Issue]

A3.6 DID – Meeting Minutes

DATA ITEM DESCRIPTION	
1. TITLE **Meeting Minutes**	2. IDENTIFICATION NUMBER **DID SUGVS-PM-004**
3. DESCRIPTION The Meeting Minutes contains the detailed records of proceedings, discussions, decisions and action items from meetings.	
4. RELATED DOCUMENTS	5. CONTRACT REFERENCE **SOW**: **Para. 3.4.5.1.2 (pg. 9)** **CDRL**: **App. A2.2 (pg. 33)**

6. PREPARATION INSTRUCTIONS

6.1. **CONTENT**

6.1.1. The Meeting Minutes must contain the detailed records of proceedings, discussions, decisions and action items from the meeting and be presented through the following sections:

6.1.1.1. General – consisting of meeting identification number, purpose, date, time and location;

6.1.1.2. Attendees, consisting of the organization each person represents, and the identification of the Chairperson(s);

6.1.1.3. Opening Remarks;

6.1.1.4. **Action Item Report** - used to monitor issues, assign responsibility, direct action and track status, history, and progress, and must consisting of:

6.1.1.4.1. Item #; date initiated; required action; assigned actionee; target completion date; cross-reference to all related action items.

6.1.1.4.2. Action Item Report must be **updated** with each meeting and must consisting of:

6.1.1.4.2.1. Action Item current status and the actual date completed;

6.1.1.5. Next Venue;

6.1.1.6. Closing Remarks;

6.2. **SOFT COPY FORMAT**

6.2.1. The Meeting Minutes must be submitted as a PDF file type.

6.2.2. The Meeting Minutes PDF must be submitted via email (submission size not to exceed 7MB) as follows:

6.2.2.1. To Field: As per the related CDRL section 9.A. Addressee, as identified in the contract.

6.2.2.2. Subject Field: SUGVS-PM-004 – Meeting Minutes – [Rev #] – [Date of Issue]

A3.7 DID – Application for Spectrum Supportability

DATA ITEM DESCRIPTION	
1. TITLE **Application for Spectrum Supportability**	2. IDENTIFICATION NUMBER **DID SUGVS-ILS-201**
3. DESCRIPTION This Application for Spectrum Supportability document (DND form 552) describes the general wireless equipment usage as well as the transmitter, antenna and receiver equipment characteristics of the system that is provided.	
4. RELATED DOCUMENTS	5. CONTRACT REFERENCE **SOW**: **Para. 4.3.2 (pg. 10)** **CDRL**: **App. A2.2 (pg. 33)**

6. PREPARATION INSTRUCTIONS

6.1. **CONTENT**

6.1.1. The Application for Spectrum Supportability must be completed and provided in accordance with the requirements as outlined in the Application for Spectrum Supportability.

6.1.2. The following sections of the Application for Spectrum Supportability must be completed:

6.1.2.1. Part 1, Block 1 – Equipment Nomenclature and/or Model Number;

6.1.2.2. Part 2 – Transmitter Equipment Characteristics;

6.1.2.3. Part 3 – Receiver Equipment Characteristics, and

6.1.2.4. Part 4 – Antenna Equipment Characteristics.

6.1.3. The values entered in the Application for Spectrum Supportability must be measured values.

6.1.4. Where equipment is developmental, specified values may be substituted for measured values, and so indicated on the forms. If the proposed equipment is in use by the United States military it may already have a US Department of Defence (DoD) Form 1494. If available, a DoD 1494 form will be accepted by DND in lieu of a DND 552.

6.2. **SOFT COPY FORMAT**

6.2.1. The Application for Spectrum Supportability must be provided as a PDF file.

6.2.2. **Soft Copy format submission size below 7MB** – The Application for Spectrum Supportability may be submitted via email as follows:

6.2.2.1. To Field: As per the related CDRL section 9.A. Addressee, as identified in the contract.

6.2.2.2. Subject Field: SUGVS-ILS-201 – Application for Spectrum Supportability – [Rev #] – [Date of Issue]

6.2.3. **Soft Copy format submission size at or above 7MB** - The Application for Spectrum Supportability file must be submitted on CD or DVD media and be labelled as follows:

6.2.3.1. Small Unmanned Ground Vehicle System

6.2.3.2. Application for Spectrum Supportability

6.2.3.3. SUGVS-ILS-201;

6.2.3.4. The Revision number, and

6.2.3.5. The date of issue.

Application for Spectrum Supportability **Demande d'octroi de Fréquences**	Date	Page

To: À:	From (Office making request): De (Bureau qui présente la demande):

1. Equipment nomenclature and/or model number
   Désignation du matériel et numéro de modèle

2. Status of supportability request (check one)
   Centre de demande d'octroi (cochez une seule case)

☐ Experimental research or exploratory development / Recherche expérimentale ou développement préliminaire
☐ Advanced or engineering development / Développement avancé ou ingénierie
☒ Operational / Utilisation opérationnelle

1. Equipment Usage – Utilisation du matériel

3. **Functional and purpose**: TRANSMISSION OF LIVE CAMERA IMAGES AND CONTROL SIGNALS BETWEEN THE SMALL UNMANNED GROUND VEHICLE (SUGV) AND THE CONTROL AND COMMUNICATION SYSTEM (CCS).
   Fonction et but: TRANSMISSION D'IMAGES VIDÉO ET DE SIGNAUX DE COMMANDE ENTRE LE PETIT VÉHICULE TERRESTRE TÉLÉPILOTÉ (MUGV) ET LE SYSTÈME DE CONTRÔLE ET DE COMMUNICATION (CCS).

4. **Method of operation:** OPERATOR REMOTELY OPERATE THE SUGV BY MEANS OF CCS RF VIDEO TRANSMITTER & RECEIVER WIRELESS LINK.
   Mode de fonctionnement: UN OPÉRATEUR OPÈRE À DISTANCE ET MANIPULE LE SUGV AU MOYEN DE LIAISON SANS FIL ÉMETTEUR ET RECEPTEUR VIDÉO RF DU CCS.

5. **Extent of use:** MISSION DURATION IS 8 HOURS WITH CONTINUOUS USE DURING OPÉRATION.
   Étendue de l'utilisation : LA DURÉE DE LA MISSION EST DE 8 HEURES AVEC UTILISATION CONTINUE DURANT L'UTILISATION.

6. **Operational environment:** OPÉRATION IN ALL ENVIRONMENTAL CONDITIONS, LOCATIONS CAN BE IN URBAN AREAS AND ALL TERRAIN CONDITIONS IN THE FIELD.
   Milieu d'utilisation: FONCTIONNEMENT DANS TOUTES LES CONDITIONS ENVIRONMENTALES, LES EMPLACEMENTS PEUVENT ÊTRE DANS DES ZONES URBAINES ET TOUTES LES CONDITIONS DE TERRAIN SUR LE TERRAIN.

7. **Geographical area of experimental research, or developmental evaluation:** NO RESEARCH OR DEVELOPMENT.
   Région géographique de la recherche expérimentale ou de l'évaluation du développement : AUCUNE RECHERCHE OU DÉVELOPPEMENT.

8. **Geographical area of operational use:** WORLWIDE
   Région géographique de l'utilisation opérationnelle : À L'ÉCHELLE MONDIALE

9 **Number of equipments in initial phase:** 59 SMALL UNMANNED GROUND VEHICLE SYSTEM (SUGV).
   Nombre d'appareils pendant la phase initiale : 59 SYSTÈME PETIT VEHICULE TERRESTRE TÉLÉPILOTÉ (SUGV).

10. **Number of equipments planned for operational use:** EOD TEAMS WILL USE ONE (1) SUGV PER TEAM
    Nombre d'appareils prévu pour l'utilisation opérationnelle : LES ÉQUIPES EOD VONT UTILISER UN (1) SUGV PAR ÉQUIPE

11. **Number of these equipments operating simultaneously in the same electromagnetic environment:** MAX SIX (6) SUGV PER LOCATION, CONSISTING OF SIX (6) UGV AND SIX (6) CCS.
    Nombre d'appareils fonctionnant simultanément dans le même milieu électromagnétique : MAX SIX (6) SUGV PAR EMPLACEMENT, COMPRENANT SIX (6) UGV ET SIX (6) CCS.

12. **Target date for the start and end of experimental or developmental evaluation**: N/A
    Date prévue pour le commencement et la fin de l'évaluation expérimentale ou de l'évaluation ou développement : N/A

13. **Target date for operational use:** 2025/2026
    Date prévue d'utilisation opérationnelle : 2025/2026

14. Previous DND 552 application number (for DIMTPS 5 use only)
    Numéro d'application de l'ancien formulaire MDN 552 (pour utilisation de DTPSGI 5 seulement)

☐ Continued unchanged (see remarks) / Reste en vigueur (voir les remarques)
☐ Superseded / Est remplacé
☐ Related / Demeure connexe
☐ None / Aucun

DND 552_____ CCEB CF 299_____

2. Transmitter Equipment Characteristics - Caractéristiques du matériel émetteur

1. Nomenclature, Manufacturer's Model No.:
Désignation, n° de modèle du fabricant:

2. Manufacturer's Name:
Nom du fabricant:

3. Transmitter Installation:
Installation émettrice:

4. Transmitter Type:
Type d'émetteur:

5. Tuning Range:
Gamme d'accord:

6. Method of Tuning:
Méthode d'accord:

7. RF Channelling Capability:
Répartition des voles RF:

8. Emission Designator(s):
Identificateur(s) d'émission:

9. Frequency Tolerance:
Tolérance de fréquence:

10. Filter Employed — Yes / No
Filtre utilisé: Oui ☐ Non ☐

11. Spread Spectrum: — Yes / No
Spectre étalé: Oui ☐ Non ☐

12. Emission Bandwidth
Largeur de bande de l'émission:
Calculated ☐ Calculée — Measured ☐ Mesurée

(a) –3 dB _____
(b) –20 dB _____
(c) –40 dB _____
(d) –60 dB _____
(e) OCCBW _____
Largeur de bande occupée

13. Maximum Bit Rate:
Débit binaire maximal:

14. Modulation Techniques and Coding:
Techniques de modulation et de codage:

15. Maximum Modulation Frequency:
Fréquence de modulation et de codage:

16. Pre-emphasis: — Yes / No
Préaccentuation: Oui ☐ Non ☐

17. Deviation Ratio:
Rapport de déviation:

18. Pulse Characteristics:
Caractéristiques des impulsions:
(a) Rate – Fréq. de récurrence_____
(b) Width – Durée_____
(c) Rise Time – Temps de montée_____
(d) Fall Time – Temps de descente_____
(e) Comp Ratio – Rapport de comp._____
Largeur de bande occupée

19. Power – Puissance:
(a) Mean – Moyenne _____
(b) PEP – En crête_____

20. Output Device:
Dispositif de sortie:

21. Harmonic Level:
Niveau des harmoniques:
(a) 2nd – 2e_____
(b) 3rd – 3e_____
(c) Other – Autres_____

22. Spurious Level:
Niveau du rayonnement non essentiel:

23. Industry Canada Type Approval No.:
Nº d'homologation de l'industrie Canada:

24. Remarks:
Remarques:

3. Receiver Equipment Characteristics – Caractéristiques du matériel récepteur

1. Nomenclature, Manufacturer's Model No.:
Désignation, n° de modèle du fabricant:

2. Manufacturer's Name:
Nom du fabricant:

3. Receiver Installation:
Installation réceptrice:

4. Receiver Type:
Type de récepteur:

5. Tuning Range:
Gamme d'accord:

6. Method of Tuning:
Méthode d'accord:

7. RF Channelling Capability:
Répartition des voles RF:

8. Emission Designator(s):
Identificateur(s) d'émission:

9. Frequency Tolerance:
Tolérance de fréquence:

10. IF Selectivity: 1st 2nd 3rd
Sélectivité FI: 1ére 2e 3e
(a) –3 dB_____
(b) –20 dB_____
(c) –60 dB _____

12. RF Selectivity:
Sélectivité RF:
Calculated ☐ Measured ☐
Calculée Mesurée
(a) –3 dB _____
(b) –20 dB_____
(c) –40 dB_____

12. IF Frequency:
Fréquence intermédiaire:
(a) 1st – 1ére _____
(b) 2nd – 2e _____
(c) 3rd – 3e _____

13. DIMTPS 5 use only:
Réservé au DTPSGI 5:

14. DIMTPS 5 use only:
Réservé au DTPSGI 5:

15. Oscillator Tuned:
Oscillateur accordé:

	1st 1ére	2nd 2e	3rd 3e
(a) Above Tuned Frequency / Au-dessus de la fréq. d'accord	☐	☐	☐
(b) Below Tuned Frequency / Au-dessous de la fréq. d'accord	☐	☐	☐
(c) Either Above or Below the Frequency / Ou au-dessus ou au-dessous de la fréq.	☐	☐	☐

16. Maximum Bit Rate:
Débit binaire maximal:

17. Sensitivity:
Sensibilité:
(a) Sensitivity – Sensibilité_____dBm
(b) Criteria – Critère_____
(c) Noise Fig – Facteur de bruit_____ dB
(d) Noise Temp – Temp. de bruit_____Kelvin

18. De-emphasis: Yes ☐ No ☐
Désaccentuation: Oui Non

19. Image Rejection:
Rejet de fréquence image:

20. Spurious Rejection:
Rejet des fréquences parasites:

21. Remarks:
Remarques:

22. Industry Canada Type Approval No.:
N° d'homologation de l'industrie Canada:

4. Antenna Equipment Characteristics – Caractéristiques du matériel d'antenne

1. Transmitting / Émission ☐ Receiving / Réception ☐ Transmitting and Receiving / Émission et réception ☐

2. Nomenclature, Manufacturer's Model No.:
Désignation, nº de modèle du fabricant:

3. Manufacturer's Name:
Nom du fabricant:

4. Frequency Range:
Gamme de fréquences:

5. Type:

6. Polarization – Polarisation:

7. Scan Characteristics:
Caractéristiques de balayage:
- (a) Type_____
- (b) Vertical Scan:
  Balayage vertical:_____
  - (1) Max Elev
    Angle de site max._____
  - (2) Min Elev
    Angle de site min._____
  - (3) Scan Rate
    Vitesse de balayage_____
- (c) Horizontal Scan:
  Balayage horizontal:_____
  - (1) Sector Scanned
    Secteur balayé_____
  - (2) Scan Rate
    Vitesse de balayage_____
- (d) Sector Blanking / Effacement de secteur — Yes / Oui ☐ No / Non ☐

8. Gain:
- (a) Main Beam
  Faisceau principal_____
- (b) 1st Major Side Lobe
  1er lobe latéral important_____

9. Beamwidth :
Largeur du faisceau:
- (a) Horizontal_____
- (b) Vertical_____

10. Remarks:
Remarques:

Originator: Rédacteur:	Position:	Telephone Number: Numéro de téléphone:	Date:

INSTRUCTIONS FOR COMPLETING DND FORM 552

Classification. Enter classification and downgrading stamp. Indicate by check mark whether for Experimental Research or Exploratory Development, Advanced or Engineering Development, or Operational Utilization. The classification of the title should be appropriately indicated (e.g. (U), (C) or (S)). Classified information contained in the completed form should be indicated:

a) as a general statement in a Remarks block, such as, “The purpose, functions, operational use, frequency band, emission bandwidths, and power are classified X”;

b) by an enumeration of the applicable paragraphs and subparagraphs with their classifications; or

c) the classification may be marked alongside each entry on the form.

PART 1: EQUIPMENT USAGE

Part 1, Block 1: Nomenclature and Model Number

Provide nomenclature and equipment type (e.g. AN/FPS-16 Instrumentation Radar).

Part 1, Block 2: Status of Supportability Request

The supportability request will be for one of these purposes:

a. Experimental research or exploratory development:

(1) To test the feasibility of new techniques or concepts of natural phenomena and environment, and efforts towards solution of problems in the physical, behavioural and social sciences that have no direct military application; and

INSTRUCTIONS POUR REMPLIR LE FORMULAIRE DND 552

Classification. Entrer la classification et le déclassement. Indiquer par un crochet s’il s’agit d’une recherche expérimentale ou d’un développement préliminaire, d’un développement avancé ou d’ingénierie ou d’une utilisation opérationnelle. La classification du titre doit être indiquée convenablement (par exemple, (U), (C) ou (S)). L’information classifiée du formulaire rempli doit être signalée :

a) en tant qu’énoncé général dans le bloc Remarques tel que : « L’objet, les fonctions, l’utilisation opérationnelle, la bande de fréquences, les largeurs de bandes d’émission et la puissance sont classifiés X »;

b) par une énumération des paragraphes et des sous-paragraphes applicables accompagnés de leur classification; ou

c) la classification peut être indiquée à côté de chaque entrée du formulaire.

PARTIE 1 : UTILISATION DE L’ÉQUIPEMENT

Partie 1, Bloc 1 : Désignation et numéro de modèle

Inscrire la nomenclature et le type d’équipement (par exemple, radar d’instrumentation AN/FPS-16).

Partie 1, Bloc 2 : Statut de la demande de soutenabilité

La demande de soutenabilité de fréquences est faite pour l’un de ces buts :

a. Recherche expérimentale ou développement préliminaire :

(1) Pour vérifier la faisabilité de techniques ou de concepts nouveaux des phénomènes ou de l’environnement naturel et pour consacrer des efforts en vue de trouver une solution à des problèmes liés aux sciences physiques, comportementales et sociales qui n’ont aucune application militaire directe; et

(2) To test the feasibility of adapting conventional techniques to new purposes prior to projection into development planning. Includes all effort directed toward solution of specific military problems, short of major development projects.

b. Advanced or engineering development:

(1) to develop equipment which have moved into the development of hardware for experimental or operational test;

(2) to modify existing operational equipment for improved performance;

(3) to develop programs being engineered for service use, but have not yet been approved for production and service deployment; and

(4) to continue development of equipment/systems that have been approved for production and service use.

c. To operate and test equipment which have passed the development phase and are planned for operational use for:

(1) tactical and training purposes; or

(2) non-tactical purposes, such as for test range instrumentation.

Part 1, Block 3: Function and Purpose

Describe as specifically as possible the function and purpose to be performed. For example: guided missile control radar; troposcatter communications equipment; provides acquisition and tracking information; short range communications; telemetering for quality control.

Part 1, Block 4: Method of Operation

Describe the method of operation. For example: radar activates beacon transponder in missile with coded pulses; beacon provides missile track; radar

(2) Pour vérifier la faisabilité de l'adaptation de techniques conventionnelles aux nouveaux objectifs avant la projection dans la planification de développement. Cette démarche comprend tous les efforts consacrés à trouver la solution de problèmes militaires spécifiques, à l'exception des projets majeurs de développement.

b. Développement avancé ou d'ingénierie :

(1) pour développer de l'équipement qui s'est introduit dans le développement du matériel pour les essais expérimentaux ou opérationnels;

(2) pour modifier l'équipement opérationnel existant afin d'améliorer la performance;

(3) pour développer des programmes préparés pour l'usage militaire mais qui n'ont pas encore été approuvés pour la production et le déploiement militaire; et

(4) pour continuer le développement de systèmes et d'équipement qui ont été approuvés pour la production et l'usage militaire.

c. Pour exploiter et vérifier l'équipement qui a passé la phase du développement et dont l'utilisation opérationnelle est prévue pour :

(1) fins tactiques et de formation; ou

(2) fins non tactiques telle que l'instrumentation d'un champ de tir d'essai.

Partie 1, Bloc 3 : Fonction et but

Décrire aussi précisément que possible la fonction à exécuter et le but à atteindre. Par exemple : radar de contrôle de missile guidé; équipement de communication de diffusion troposphérique; fournit de l'information d'acquisition et de poursuite; communications à courte portée; télémétrie pour le contrôle de la qualité.

Partie 1, Bloc 4 : Mode de fonctionnement

Décrire le mode de fonctionnement. Par exemple : le radar actionne le transpondeur de la radiobalise dans le missile par des impulsions codées; la radiobalise détermine la piste de poursuite du missile; les radars transmettent aussi des signaux de

also transmits coded pulse command signals to missile beacon receiver for guidance.

Part 1, Block 5: Extent of Use

Describe operational extent of usage. For example: continuous or intermittent; expected duty cycle during mission; expected number of hours of operation per day or other appropriate time period. Indicate any conditions governing intermittent use. If appropriate, describe mission phase during which system operates.

Part 1, Block 6: Operational Environment

Give brief description of ultimate operational environment. For example: amphibious landing operations; defence of strategic target area; sea areas; field army. Provide any additional environmental factors pertinent to a meaningful assessment of electromagnetic compatibility, such as specific vehicle/platform types, expected mobility or other factors affecting the environment variability.

Part 1, Block 7: Geographical Area of Experimental Research or Developmental Evaluation

State the geographical area used for the experimental research or development.

Part 1, Block 8: Geographical Area of Operational Use

State the geographical area for potential use. Provide latitude and longitude of centre of operational area and radius of operation in kilometres.

Part 1, Block 9: Number of Equipment in Initial Phase

List number of equipment planned for experimental or developmental phase.

Part 1, Block 10: Number of Equipment Planned for Operational Use

List number of equipment planned for operational use.

commande codés au récepteur de la radiobalise du missile pour le guidage.

Partie 1, Bloc 5 : Étendue de l'utilisation

Décrire l'étendue opérationnelle de l'utilisation. Par exemple : continue ou intermittente; facteur d'utilisation prévu au cours de la mission; nombre d'heures d'exploitation prévues par jour ou autre période appropriée. Indiquer toute condition gouvernant l'utilisation intermittente. Décrire au besoin la phase de la mission durant laquelle le système fonctionne.

Partie 1, Bloc 6 : Milieu opérationnel

Donner une brève description du milieu opérationnel ultime. Par exemple : opérations amphibies de débarquement; défense d'une zone cible stratégique; zones maritimes; armée de campagne. Fournir tous les facteurs environnementaux supplémentaires pertinents à l'évaluation significative de la compatibilité électromagnétique, tels que les types particuliers de véhicules ou de plates-formes, la mobilité prévue ou les autres facteurs ayant un effet sur la variabilité de l'environnement.

Partie 1, Bloc 7 : Région géographique de la recherche expérimentale ou de l'évaluation du développement

Indiquer la région géographique qui sert à la recherche expérimentale ou au développement.

Partie 1, Bloc 8 : Région géographique de l'utilisation opérationnelle

Indiquer la région géographique de l'utilisation potentielle. Donner la latitude et la longitude du centre de la zone opérationnelle et le rayon d'opération en kilomètres.

Partie 1, Bloc 9 : Nombre d'appareils pendant la phase initiale

Indiquer le nombre d'appareils prévus pour la phase expérimentale ou de développement.

Partie 1, Bloc 10 : Nombre d'appareils prévus pour l'utilisation opérationnelle

Indiquer le nombre d'appareils prévus pour l'utilisation opérationnelle.

Part 1, Block 11: Number of These Equipment Operating Simultaneously in the Same Electromagnetic Environment

Indicate maximum number of these systems that will be operating simultaneously in the same environment. For example: three (3) missiles will be flown simultaneously in an operating area.

Part 1, Block 12: Target Date for the Start and End of Experimental or Developmental Evaluation

Indicate the dates on which it is expected that the experimental or developmental phase will start and finish.

Part 1, Block 13: Target Date for Operational Use

Indicate target date for operational use.

Part 1, Block 14: Previous DND 552 Application Number

For DIMTPS 5 use only.

Partie 1, Bloc 11 : Nombre d'appareils fonctionnant simultanément dans le même milieu électromagnétique

Indiquer le nombre maximal d'appareils fonctionnant simultanément dans le même environnement. Par exemple : trois (3) missiles voleront simultanément dans la zone opérationnelle.

Partie 1, Bloc 12 : Date prévue pour le commencement et la fin de l'évaluation expérimentale ou de l'évaluation du développement

Indiquer les dates auxquelles il est prévu que la phase expérimentale ou de développement débutera et se terminera.

Partie 1, Bloc 13 : Date prévue d'utilisation opérationnelle

Indiquer la date prévue pour l'utilisation opérationnelle.

Partie 1, Bloc 14 : Numéro de demande de l'ancien formulaire DND 552

À l'usage exclusif du DTPSGI 5.

PART 2: TRANSMITTER EQUIPMENT CHARACTERISTICS

Part 2, Block 1: Nomenclature, Manufacturer's Model No.

Enter the Government assigned alphanumeric equipment designation. If not available, enter the manufacturer's model number (e.g. MIT 502), and indicate Manufacturer's Name (Part 2, block 2). If this too is not available, enter a short descriptive title (e.g. ATS-6 Telemetry Transmitter).

Part 2, Block 2: Manufacturer's Name

Enter the manufacturer's name, if available. If a manufacturer's model number is listed in Nomenclature (Part 2, block 1), this block must be completed.

Part 2, Block 3: Transmitter Installation

List specific types of vehicles, ships, planes or buildings, etc., where the transmitters will be installed.

Part 2, Block 4: Transmitter Type

Enter the generic name of the transmitter (e.g. Frequency Scan, Scan While Track Radar, Monopulse Tracker, AM or PM Communications). In addition, for radar enter the radar type (e.g. Non-FM Pulse, FM Pulse, Frequency Hopping, CW or FM-CW).

Part 2, Block 5: Tuning Range

Enter the frequency range through which the transmitter is capable of being tuned (e.g. 225 to 400 MHz). For equipment designed to operate only at a single frequency, enter that frequency. Include units (e.g. kHz, MHz or GHz).

Part 2, Block 6: Method of Tuning

Enter the method of tuning (e.g. crystal, synthesizer or cavity). If the equipment is not readily tuneable in the field, indicate in Remarks (Part 2, block 24) the complexity of tuning. Include complexity factors such as skill levels involved, major assemblies

PARTIE 2 : CARACTÉRISTIQUES DE L'ÉQUIPEMENT ÉMETTEUR

Partie 2, Bloc 1 : Désignation, n° de modèle du fabricant

Indiquer la désignation alphanumérique de l'équipement désigné par le gouvernement. S'il n'est pas disponible, indiquer le numéro du modèle du fabricant (par exemple, MIT 502) et indiquer le nom du fabricant (partie 2, bloc 2). Si ces renseignements ne sont également pas disponibles, indiquer un court titre descriptif (par exemple, émetteur de télémétrie ATS-6).

Partie 2, Bloc 2 : Nom du fabricant

Indiquer le nom du fabricant s'il est disponible. Si le numéro du modèle du fabricant est indiqué à la partie 2, bloc 1, ce bloc doit être rempli.

Partie 2, Bloc 3 : Installation émettrice

Indiquer les types spécifiques de véhicules, de navires, d'aéronefs ou de bâtiments, etc., où les émetteurs seront installés.

Partie 2, Bloc 4 : Type d'émetteur

Indiquer le nom générique de l'émetteur (par exemple, balayage de fréquences, radar de poursuite sur informations discontinues, traqueur monopulse, communications AM ou PM). De plus, pour les radars, indiquer le type du radar (par exemple, à impulsions autres que FM, à impulsions FM, à sauts de fréquence, à ondes continues ou à FM-CW).

Partie 2, Bloc 5 : Gamme d'accord

Indiquer la gamme de fréquences sur laquelle l'émetteur peut être accordé (par exemple, de 225 à 400 MHz). Indiquer la fréquence dans le cas de l'équipement conçu pour fonctionner seulement à une seule fréquence. Indiquer les unités (par exemple, kHz, MHz ou GHz).

Partie 2, Bloc 6 : Méthode d'accord

Indiquer la méthode d'accord (par exemple, quartz, synthétiseur ou cavité). Si l'équipement ne peut être accordé facilement sur le terrain, indiquer dans le bloc Remarques (partie 2, bloc 24) la complexité de l'accord. Inclure les facteurs de

involved, time required, and location (factory or depot) where equipment is to be tuned.

complexité tels que les niveaux de compétence nécessaires, les ensembles principaux nécessaires, le temps nécessaire et l'emplacement (usine ou dépôt) où l'équipement doit être accordé.

Part 2, Block 7: RF Channelling Capability

Describe the RF channelling capability:

a. for uniformly spaced channels, enter the centre frequency of the first channel and channel spacing (e.g. first channel 406 MHz, 100 kHz increments);

b. for continuous tuning, enter the lowest frequency and the word "continuous"; and

c. for others, such as SSB or cases where channel selection is under software control, enter a detailed description in Remarks (Part 2 block 24, e.g. degraded channels, internal hardwiring limitations or lockout capability for frequency hopping systems).

Partie 2, Bloc 7 : Répartition des canaux RF

Décrire la répartition des canaux RF :

a. pour indiquer la fréquence centrale du premier canal et l'espacement des canaux (par exemple, premier canal à 406 MHz avec incréments de 100 kHz) dans le cas des canaux uniformément espacés;

b. pour indiquer la plus basse fréquence et le mot « continu » dans le cas de l'accord continu; et

c. pour les autres, tels que BLU ou les cas où la sélection du canal est commandée par logiciel, entrer une description détaillée (par exemple, canaux dégradés, limitations internes de câblage ou capacité de verrouillage pour les systèmes à sauts de fréquence) dans le bloc Remarques (partie 2, bloc 24).

Part 2, Block 8: Emission Designators

Enter the emission designators, including the necessary bandwidth, for each designator, in accordance with Appendix D3 (e.g. 16K0F3E). For systems with a frequency hopping mode as well as a non-hopping mode, enter the emission designators for each mode. Identify each mode as hopping or non-hopping.

Partie 2, Bloc 8 : Identificateur(s) d'émission

Indiquer le ou les identificateurs d'émission, y compris la largeur de bande nécessaire pour chaque identificateur conformément au contenu de l'appendice D3 (par exemple, 16K0F3E). Entrer les identificateurs d'émission de chaque mode dans le cas des systèmes avec un mode à sauts de fréquence ainsi que ceux avec un mode sans sauts de fréquence. Identifier chaque mode comme étant à sauts ou sans sauts.

Part 2, Block 9: Frequency Tolerance

Enter the frequency tolerance (i.e. the maximum departure of a transmitter from its assigned frequency after normal warm-up time). Indicate the units in parts per million (ppm) for all emission types except single sideband, which must be indicated in Hertz (Hz).

Partie 2, Bloc 9 : Tolérance de fréquence

Indiquer la tolérance de fréquence (c'est-à-dire, l'écart maximal d'un émetteur de sa fréquence assignée après le temps de réchauffement normal). Indiquer les unités en parties par million (ppm) pour tous les types d'émissions sauf la bande latérale unique, qui doit être indiquée en hertz (Hz).

Part 2, Block 10: Filter Employed

Check the appropriate box.

Partie 2, Bloc 10 : Filtre utilisé

Cocher la case appropriée.

Part 2, Block 11: Spread Spectrum

Check the appropriate box. If “Yes”, refer to instructions for Modulation (Part 2, block 14).

Part 2, Block 12: Emission Bandwidth

Enter the emission bandwidths for which the transmitter is designed at the -3, -20 and -60 dB levels and the occupied bandwidth. For pulse radar transmitters the bandwidth at -40 dB must also be entered. The emission bandwidth is defined as the bandwidth appearing at the antenna terminals and includes any significant attenuation contributed by filtering in the output circuit or transmission lines. Values of emission bandwidth specified should be indicated as calculated or measured, by checking the appropriate box. If calculated, the methods used must be in accordance with Industry Canada TRC 43, which is available on the Internet. Indicate units used (e.g. Hz, kHz or MHz). Note that the occupied bandwidth (block 12[e]) is defined as the width of the frequency bandwidth such that, below its lower and above its upper limits, the mean power radiated is each equal to 0.5% of the total mean power radiated.

Part 2, Block 13: Maximum Bit Rate

Enter the maximum information bit rate for digital equipment, in bits per second (bps). If spread spectrum is used, enter the bit rate after encoding.

Part 2, Block 14: Modulation Techniques and Coding

Describe in detail the modulation and coding techniques employed. For complex modulation schemes, such as direct sequence spread spectrum, frequency hopping or frequency agile, provide information relating to the hop rate, processing gain, clock rate, pre-defined hop sets and frequencies, minimum required number of frequencies per hop set, notching capability, etc. If too lengthy, use Remarks (Part 2, block 24).

Partie 2, Bloc 11 : Spectre étalé

Cocher la case appropriée. Se reporter aux instructions pour remplir le bloc Modulation (partie 2, bloc 14) si la case « Oui » est cochée.

Partie 2, Bloc 12 : Largeur de bande de l’émission

Indiquer les largeurs de bandes d’émissions pour lesquelles l’émetteur est conçu aux niveaux de -3, -20 et -60 dB et la largeur de bande occupée. Pour les émetteurs radars à impulsions, la largeur de bande de -40 dB doit aussi être indiquée. La largeur de bande d’émission est définie comme étant la largeur de bande apparaissant aux bornes de l’antenne et comprend toute atténuation concrète contribuée par le filtrage des circuits de sortie ou des lignes de transmission. Les valeurs des largeurs de bandes d’émission spécifiées doivent être indiquées telles qu’elles sont calculées ou mesurées en cochant la case appropriée. Si les valeurs sont calculées, les méthodes utilisées doivent être conformes aux indications de la Circulaire de la réglementation des télécommunications 43 (CRT 43) d’Industrie Canada disponibles sur l’Internet. Indiquer les unités utilisées (par exemple, Hz, kHz ou MHz). Remarquer que la largeur de bande occupée (bloc 12e) est définie comme étant la largeur de la bande de fréquence telle que, sous sa limite inférieure et au-dessus de sa limite supérieure, la puissance moyenne rayonnée de chacune est égale à 0.5 % de la puissance moyenne rayonnée totale.

Partie 2, Bloc 13 : Débit binaire maximal

Indiquer le débit binaire maximal en bits par seconde (bps) pour l’équipement numérique. Indiquer le débit binaire après le codage si l’étalement du spectre est utilisé.

Partie 2, Bloc 14 : Techniques de modulation et de codage

Décrire en détail les techniques de modulation et de codage utilisées. Dans le cas des formules complexes de modulation, telles que l’étalement du spectre en ordre direct, à sauts de fréquence ou à agilité de fréquence, fournir de l’information se rapportant aux taux de sauts, aux gains de traitement, à la fréquence d’horloge, aux ensembles de sauts et de fréquences prédéfinis, au nombre minimal nécessaire de fréquences par ensemble de sauts, à la

capacité d'absorption, etc. Utiliser le bloc Remarques (partie 2, bloc 24) si le contenu est trop long.

Part 2, Block 15: Maximum Modulation Frequency

Enter the maximum modulation or baseband frequency for a frequency or phase-modulated transmitter. This is assumed to be the frequency at the -3 dB point on the high frequency side of the modulator response curve. Indicate the units (e.g. Hz, kHz or MHz).

Partie 2, Bloc 15 : Fréquence maximale de modulation

Indiquer la fréquence maximale de modulation ou de bande de base pour un émetteur modulé en fréquence ou en phase. Il est tenu pour acquis qu'il s'agit de la fréquence au point de -3 dB du côté haute fréquence de la courbe de réponse du modulateur. Indiquer les unités (par exemple, Hz, kHz ou MHz).

Part 2, Block 16: Pre-emphasis

For frequency or phase-modulated transmitters, check the appropriate box to indicate whether pre-emphasis is available.

Partie 2, Bloc 16 : Préaccentuation

Cocher la case appropriée pour indiquer si la préaccentuation est disponible dans le cas des émetteurs modulés en fréquence ou en phase.

Part 2, Block 17: Deviation Ratio

For frequency or phase modulated transmitters, enter the deviation ratio, computed as follows:

$$\text{Deviation Ratio} = \frac{\text{Maximum Frequency Deviation}}{\text{Maximum Modulation Frequency}}$$

Partie 2, Bloc 17 : Rapport de déviation

Indiquer le rapport de déviation calculé de la façon suivante dans le cas des émetteurs modulés en fréquence ou en phase :

$$\text{Rapport de déviation} = \frac{\text{Déviation maximale de la fréquence}}{\text{Fréquence maximale de modulation}}$$

Part 2, Block 18: Pulse Characteristics

For pulse modulated transmitters:

a. enter the pulse repetition rate, in pulses per second (pps);

b. enter the pulse width at the half voltage levels, in microseconds (µsec);

c. enter the pulse rise time, in microseconds (µsec). This is the time required for the leading edge of the voltage pulse to rise from 10% to 90% of its peak amplitude;

d. enter the pulse fall time, in microseconds (µsec). This is the time required for the trailing edge of the voltage pulse to fall from 90% to 10% of its peak amplitude; and

e. enter the maximum pulse compression ratio, if applicable.

Partie 2, Bloc 18 : Caractéristiques des impulsions

Pour les émetteurs modulés par impulsions :

a. indiquer la fréquence de récurrence d'impulsions en impulsions par seconde (pps);

b. indiquer la largeur d'impulsions aux niveaux de demi-tension en microsecondes (µsec);

c. indiquer le temps de montée de l'impulsion en microsecondes (µsec); C'est le temps nécessaire au flanc avant de l'impulsion de tension pour monter de 10 % à 90 % de son amplitude de crête;

d. indiquer le temps de descente de l'impulsion en microsecondes (µsec); C'est le temps nécessaire au flanc arrière de l'impulsion de tension pour descendre de 90% à 10% de son amplitude de crête; et

e. indiquer le rapport maximal de compression de l'impulsion s'il s'applique.

For coded pulse waveforms refer to instructions for Modulation (Part 2, block 14).

Part 2, Block 19: Power

Enter the mean power delivered to the antenna terminals for all AM and FM emissions, or the peak envelope power (PEP) for all other classes of emissions. If there are any unique situations, such as interrupted CW, provide details in Remarks (Part 2, block 24). Indicate the units (e.g. W or kW).

Part 2, Block 20: Output Device

Enter a description of the device used in the transmitter output stage (e.g. ceramic diode, reflex klystron, transistor or TWT).

Part 2, Block 21: Harmonic Level

Enter the harmonic level of the second and third harmonics, in dB, relative to the fundamental. Enter in “other” (block 21[c]) the relative level, in dB, of the highest power harmonic above the third.

Part 2, Block 22: Spurious Level

Enter the maximum value of spurious emission, in dB, relative to the fundamental, which occurs outside the -60 dB point on the transmitter fundamental emission spectrum (Part 2, block 12) and does not occur on a harmonic of the fundamental frequency. Indicate, in kHz or MHz, the location of the spurious emission from the fundamental frequency.

Part 2, Block 23: Industry Canada Type Approval No.

Enter the Industry Canada type approval number, if applicable.

Part 2, Block 24: Remarks

Self-explanatory. Use additional pages if necessary.

Se reporter aux instructions pour remplir le bloc Modulation (partie 2, bloc 14) s’il s’agit de formes d’ondes d’impulsions codées.

Partie 2, Bloc 19 : Puissance

Indiquer la puissance moyenne alimentée aux bornes de l’antenne pour toutes les émissions AM et FM, ou la puissance en crête de modulation pour toutes les autres classes d’émissions. Donner les détails dans le bloc Remarques (partie 2, bloc 24) s’il y a des situations uniques telles que des CW interrompues. Indiquer les unités (par exemple, W ou kW).

Partie 2, Bloc 20 : Dispositif de sortie

Entrer une description du dispositif utilisé à l’étage de sortie de l’émetteur (par exemple, diode céramique, klystron réflex, transistor ou TOP).

Partie 2, Bloc 21 : Niveau des harmoniques

Indiquer, en dB, le niveau des harmoniques de la deuxième et de la troisième harmonique par rapport à la fréquence fondamentale. Indiquer sous « Autre » (bloc 21[c]) le niveau de puissance relatif, en dB, des plus hautes harmoniques au-dessus de la troisième.

Partie 2, Bloc 22 : Niveau du rayonnement non essentiel

Indiquer la valeur maximale du rayonnement non essentiel, en dB, relativement à la fréquence fondamentale, qui se produit à l’extérieur du point de -60 dB sur le spectre d’émission fondamentale de l’émetteur (partie 2, bloc 12) et qui ne se produit pas sur une harmonique de la fréquence fondamentale. Indiquer, en kHz ou en MHz, l’emplacement du rayonnement non essentiel de la fréquence fondamentale.

Partie 2, Bloc 23 : N° du type approuvé d’Industrie Canada

Indiquer, s’il y a lieu, le numéro du type approuvé d’Industrie Canada.

Partie 2, Bloc 24 : Remarques

Suffisamment explicite. Utiliser au besoin des pages supplémentaires.

PART 3: RECEIVER EQUIPMENT CHARACTERISTICS

Part 3, Block 1: Nomenclature, Manufacturer's Model No.

Enter the Government assigned alphanumeric equipment designation. If not available, enter the manufacturer's model number (e.g. MIT 502) and complete Manufacturer's Name (Part 3, block 2). If this too is not available, enter a short descriptive title (e.g. GPS Receiver). A separate receiver submission is required for each receiver in a complex system (e.g. radar ECCM receivers).

Part 3, Block 2: Manufacturer's Name

Enter the manufacturer's name, if available. If a manufacturer's model number is listed in Nomenclature (Part 3, block 1), this block must be completed.

Part 3, Block 3: Receiver Installation

List specific types of vehicles, ships, planes or buildings, etc., where the receivers will be installed.

Part 3, Block 4: Receiver Type

Enter the generic class (e.g. Dual Conversion Superheterodyne or Homodyne).

Part 3, Block 5: Tuning Range

Enter the frequency range through which the receiver is capable of being tuned (e.g. 225 to 400 MHz). For equipment designed to operate only at a single frequency, enter that frequency. Include units (e.g. kHz, MHz or GHz).

Part 3, Block 6: Method of Tuning

Enter the method of tuning (e.g. crystal, synthesizer or cavity). If the equipment is not readily tuneable in the field, indicate in Remarks (Part 3, block 21) the complexity of tuning. Include complexity factors such as skill levels involved, major assemblies involved, time required, and location (factory or depot) where equipment is to be tuned.

PARTIE 3 : CARACTÉRISTIQUES DE L'ÉQUIPEMENT RÉCEPTEUR

Partie 3, Bloc 1 : Désignation, n° de modèle du fabricant

Indiquer la désignation alphanumérique de l'équipement désigné par le gouvernement. S'il n'est pas disponible, indiquer le numéro du modèle du fabricant (par exemple, MIT 502) et indiquer le nom du fabricant (partie 3, bloc 2). Si ces renseignements ne sont également pas disponibles, indiquer un court titre descriptif (par exemple, récepteur GPS). Une soumission de récepteur distincte est nécessaire pour chaque récepteur d'un système complexe (par exemple, récepteurs radars de CCME).

Partie 3, Bloc 2 : Nom du fabricant

Indiquer le nom du fabricant s'il est disponible. Si le numéro du modèle du fabricant est indiqué à la partie 3, bloc 1, ce bloc doit être rempli.

Partie 3, Bloc 3 : Installation réceptrice

Indiquer les types spécifiques de véhicules, de navires, d'aéronefs ou de bâtiments, etc., où les récepteurs seront installés.

Partie 3, Bloc 4 : Type de récepteur

Indiquer la classe générique (par exemple, superhétérodyne à double changement de fréquence ou homodyne).

Partie 3, Bloc 5 : Gamme d'accord

Indiquer la gamme de fréquences sur laquelle le récepteur peut être accordé (par exemple, de 225 à 400 MHz). Indiquer la fréquence dans le cas de l'équipement conçu pour fonctionner seulement à une seule fréquence. Indiquer les unités (par exemple, kHz, MHz ou GHz).

Partie 3, Bloc 6 : Méthode d'accord

Indiquer la méthode d'accord (par exemple, quartz, synthétiseur ou cavité). Si l'équipement ne peut être accordé facilement sur le terrain, indiquer dans le bloc Remarques (partie 3, bloc 21) la complexité de l'accord. Inclure les facteurs de complexité tels que les niveaux de compétence nécessaires, les ensembles principaux nécessaires, le

Part 3, Block 7: RF Channelling Capability

Describe the RF channelling capability:

a. for uniformly spaced channels, enter the centre frequency of the first channel and the channel spacing (e.g. first channel 406 MHz, 100 kHz increments);

b. for continuous tuning, enter the lowest frequency and the word “continuous”; and

c. for others, including cases where channel selection is under software control, enter a detailed description in Remarks (Part 3, block 21).

Part 3, Block 8: Emission Designators

Enter the emission designators, including the necessary bandwidth, for each designator, in accordance with Appendix D3 to this publication (e.g. 16K0F3E). For systems with a frequency hopping mode as well as a non-hopping mode, enter the emission designators for each mode. Identify each mode as hopping or non-hopping.

Part 3, Block 9: Frequency Tolerance

Enter the frequency tolerance (i.e., the maximum departure of a receiver from its assigned frequency after normal warm-up). Indicate the magnitude, in ppm, for all emission types except single sideband, which must be indicated in Hertz (Hz).

Part 3, Block 10: IF Selectivity

Enter the bandwidth for each IF stage at the -3, -20 and -60 dB levels. Indicate units (e.g. kHz or MHz).

Part 3, Block 11: RF Selectivity

Enter the bandwidth at the -3, -20 and -60 dB levels. The RF bandwidth includes any significant attenuation contributed by filtering in the input circuit or transmission line. Values of RF bandwidth specified

temps nécessaire et l’emplacement (usine ou dépôt) où l’équipement doit être accordé.

Partie 3, Bloc 7 : Répartition des canaux RF

Décrire la répartition des canaux RF :

a. pour indiquer la fréquence centrale du premier canal et l’espacement des canaux (par exemple, premier canal à 406 MHz avec incréments de 100 kHz) dans le cas des canaux uniformément espacés;

b. pour indiquer la plus basse fréquence et le mot « continu » dans le cas de l’accord continu;

c. pour les autres, y compris les cas où la sélection du canal est commandée par logiciel, entrer une description détaillée dans le bloc Remarques (partie 3, bloc 21).

Partie 3, Bloc 8 : Identificateur(s) d’émission

Indiquer le ou les identificateurs d’émission, y compris la largeur de bande nécessaire pour chaque identificateur conformément au contenu de l’appendice D3 de la présente publication (par exemple, 16K0F3E). Entrer les identificateurs d’émission de chaque mode dans le cas des systèmes avec un mode à sauts de fréquence ainsi que ceux avec un mode sans sauts de fréquence. Identifier chaque mode comme étant à sauts ou sans saut.

Partie 3, Bloc 9 : Tolérance de fréquence

Indiquer la tolérance de fréquence (c’est-à-dire, l’écart maximal d’un récepteur de sa fréquence assignée après le temps de réchauffement normal). Indiquer la magnitude en ppm pour tous les types d’émissions sauf la bande latérale unique, qui doit être indiquée en hertz (Hz).

Partie 3, Bloc 10 : Sélectivité FI

Indiquer la largeur de bande pour chaque étage FI aux niveaux de -3, -20 et -60 dB. Indiquer les unités (par exemple, kHz ou MHz).

Partie 3, Bloc 11 : Sélectivité RF

Indiquer la largeur de bande aux niveaux de -3, -20 et -60 dB. La largeur de bande RF comprend toute atténuation concrète contribuée par le filtrage dans le circuit d’entrée ou dans la ligne de transmission. Les

should be indicated as calculated or measured by checking the appropriate box. Indicate units (e.g. kHz or MHz). Enter the preselection type (e.g. tuneable cavity).

Part 3, Block 12: IF Frequency

Enter the tuned frequency of the first, second and third IF stages. Indicate units (e.g. kHz or MHz).

Part 3, Block 13: DIMTPS 5 Use Only

Intentionally left blank to match the US form.

Part 3, Block 14: DIMTPS 5 Use Only

Intentionally left blank to match the US form.

Part 3, Block 15: Oscillator Tuned

Check the appropriate box to indicate the location of the first, second and third oscillator frequencies with respect to the associated mixer input signal.

Part 3, Block 16: Maximum Bit Rate

Where applicable, enter the maximum bit rate (bps) that can be used. If spread spectrum is used, enter the bit rate after decoding. Describe any error detecting/correcting codes under Remarks (Part 3, block 21).

Part 3, Block 17: Sensitivity

Complete as follows:

a. enter the sensitivity in dBm;

b. specify criteria used (e.g. 12 dB SINAD, where SINAD is (Signal + Noise + Distortion) /(Noise + Distortion);

c. if the receiver is used with terrestrial systems, enter the receiver noise figure in dB; and

valeurs de la largeur de bandes RF spécifiées doivent être indiquées telles qu'elles sont calculées ou mesurées en cochant la case appropriée. Indiquer les unités (par exemple, kHz ou MHz). Indiquer le type de présélection (par exemple, cavité accordable).

Partie 3, Bloc 12 : Fréquence FI

Indiquer la fréquence accordée du premier, du deuxième et du troisième étage FI. Indiquer les unités (par exemple, kHz ou MHz).

Partie 3, Bloc 13 : À l'usage exclusif du DTPSGI 5

Bloc laissé intentionnellement vide pour s'apparier au formulaire américain.

Partie 3, Bloc 14 : À l'usage exclusif du DTPSGI 5

Bloc laissé intentionnellement vide pour s'apparier au formulaire américain.

Partie 3, Bloc 15 : Oscillateur accordé

Cocher la case appropriée pour indiquer la valeur de la première, de la deuxième et de la troisième fréquence de l'oscillateur par rapport au signal d'entrée du mélangeur connexe.

Partie 3, Bloc 16 : Débit binaire maximal

S'il y a lieu, indiquer le débit binaire maximal (bps) qui peut être utilisé. Indiquer le débit binaire après le décodage si le spectre étalé est utilisé. Décrire tout code de détection ou de correction sous Remarques (partie 3, bloc 21).

Partie 3, Bloc 17 : Sensibilité

Remplir de la façon suivante :

a. indiquer la sensibilité en dBm;

b. spécifier le critère utilisé (par exemple, SINAD de 12 dB, SINAD étant (signal + bruit + distorsion)/(bruit + distorsion);

c. indiquer la valeur de bruit du récepteur en dB si le récepteur est utilisé avec les systèmes terrestres; et

d. if the receiver is used with space or satellite earth stations, enter the receiver noise figure in Kelvin.

Part 3, Block 18: De-emphasis

For frequency or phase-modulated receivers, indicate whether de-emphasis is available.

Part 3, Block 19: Image Rejection

Enter the image rejection in dB. Image ejection is the ratio of the image frequency signal level required to produce a specified output to the desired signal level required to produce the same output.

Part 3, Block 20: Spurious Frequency Rejection

Enter the spurious frequency rejection in dB. Enter the single level of spurious frequency rejection that the receiver meets or exceeds at all frequencies outside the -60 dB IF bandwidth. Spurious frequency rejection is the ratio of a particular out-of-band frequency signal level required to produce a specified output, to the desired signal level required to produce the same output.

Part 3, Block 21: Remarks

Self-explanatory. Use additional pages if necessary.

Part 3, Block 22: Industry Canada Type Approval No.

Enter the Industry Canada type approval number, if applicable.

d. indiquer la valeur de bruit du récepteur en degrés Kelvin si le récepteur est utilisé avec les stations satellites spatiales ou terrestres.

Partie 3, Bloc 18 : Désaccentuation

Cocher la case appropriée pour indiquer si la désaccentuation est disponible dans le cas des récepteurs modulés en fréquence ou en phase.

Partie 3, Bloc 19 : Rejet de fréquence image

Indiquer le rejet de fréquence image en dB. Le rejet de fréquence image est le rapport du niveau signal de fréquence image nécessaire pour produire une sortie spécifiée au niveau désiré de signal nécessaire pour produire la même sortie.

Partie 3, Bloc 20 : Rejet des fréquences non essentielles

Indiquer le rejet des fréquences non essentielles en dB. Indiquer le niveau unique du rejet des fréquences non essentielles que le récepteur rencontre ou dépasse à toutes les fréquences à l’extérieur de la largeur de bande FI de -60 dB. Le rejet de fréquences non essentielles est le rapport d’un niveau de signal de fréquence hors bande nécessaire pour produire une sortie spécifiée au niveau de signal désiré nécessaire pour produire la même sortie.

Partie 3, Bloc 21 : Remarques

Suffisamment explicite. Utiliser au besoin des pages supplémentaires.

Partie 3, Bloc 22 : N° du type approuvé d’Industrie Canada

Indiquer, s’il y a lieu, le numéro du type approuvé d’Industrie Canada.

PART 4: ANTENNA EQUIPMENT CHARACTERISTICS

Part 4, Block 1: Antenna Type

Check the appropriate box to indicate the type of antenna. For multiantenna systems use a separate Part 4 form for each antenna.

Part 4, Block 2: Nomenclature, Manufacturer's Model No.

Enter the Government assigned alphanumeric equipment designation. If not available, enter the manufacturer's model number (e.g. DS6558) and indicate Manufacturer's Name (Part 4, block 3). If this too is not available, enter a short descriptive title (e.g. ATS-6 Telemetry Antenna).

Part 4, Block 3: Manufacturer's Name

Enter the manufacturer's name, if available. If a manufacturer's model number is given in Nomenclature (Part 4, block 2), this block must be completed.

Part 4, Block 4: Frequency Range

Enter the range of frequencies for which the antenna is designed. Indicate units (e.g. kHz or MHz).

Part 4, Block 5: Type

Enter the generic name or describe the general technical features (e.g. Horizontal, Log Periodic, Cassegrain with Polarization Twisting, Whip, Phased Array or Conformal Array). To the extent possible, use the standard antenna configuration given in Appendix D1, Figure D1-1.

Part 4, Block 6: Polarization

Enter the polarization. If circular, indicate whether it is left or right handed.

PARTIE 4 : CARACTÉRISTIQUES DE L'ÉQUIPEMENT D'ANTENNE

Partie 4, Bloc 1 : Type d'antenne

Cocher la case appropriée pour indiquer le type d'antenne. Utiliser un formulaire distinct pour chaque antenne dans le cas des systèmes à plusieurs antennes.

Partie 4, Bloc 2 : Désignation, n° de modèle du fabricant

Indiquer la désignation alphanumérique de l'équipement désigné par le gouvernement. S'il n'est pas disponible, indiquer le numéro du modèle du fabricant (par exemple, DS6558) et indiquer le nom du fabricant (partie 4, bloc 3). Si ces renseignements ne sont pas non plus disponibles, indiquer un court titre descriptif (par exemple, antenne de télémétrie ATS-6).

Partie 4, Bloc 3 : Nom du fabricant

Indiquer le nom du fabricant s'il est disponible. Si le numéro du modèle du fabricant est indiqué à la partie 4, bloc 2, ce bloc doit être rempli.

Partie 4, Bloc 4 : Gamme de fréquences

Indiquer la gamme de fréquences pour laquelle l'antenne est conçue. Indiquer les unités (par exemple, kHz ou MHz).

Partie 4, Bloc 5 : Type

Indiquer le nom générique ou décrire les caractéristiques techniques générales (par exemple, horizontale, log-périodique, Cassegrain avec torsion de polarisation, fouet, réseau à commande de phase ou réseau conforme). Utiliser, dans la mesure du possible, les configurations normalisées d'antenne indiquées à l'appendice D1, figure D1-1.

Partie 4, Bloc 6 : Polarisation

Indiquer la polarisation. Si elle est circulaire, indiquer si elle est orientée à gauche ou à droite.

Part 4, Block 7: Scan Characteristics

Complete as follows:

a. If the antenna scans, enter the type of scanning (e.g. vertical, horizontal, vertical and horizontal);

b. Vertical Scan:

(1) enter the maximum elevation angle, in degrees (positive or negative, referenced to the horizontal), that the antenna can scan;

(2) enter the minimum elevation angle, in degrees (positive or negative, referenced to the horizontal), that the antenna can scan; and

(3) enter the vertical scanning rate, in scans per minute.

c. Horizontal Scan:

(1) enter the angular scanning range, in degrees, of the horizontal sector scanned; and

(2) enter the horizontal scan rate, in scans per minute.

d. Indicate if antenna is capable of being sector blanked. If “yes”, enter details in Remarks (Part 4, block 10b.).

Partie 4, Bloc 7 : Caractéristiques de balayage

Remplir de la façon suivante :

a. Indiquer le type de balayage (par exemple, vertical, horizontal, vertical et horizontal) si l’antenne balaye;

b. Balayage vertical :

(1) indiquer l’angle de site maximal en degrés (positif ou négatif, par rapport à l’horizontal) auquel l’antenne peut balayer;

(2) indiquer l’angle minimal d’élévation en degrés (positif ou négatif, par rapport à l’horizontal) auquel l’antenne peut balayer; et

(3) indiquer la cadence de balayage vertical en balayages par minute.

c. Balayage horizontal :

(1) indiquer la portée angulaire de balayage, en degrés, du secteur horizontal balayé; et

(2) indiquer la cadence de balayage horizontal en balayages par minute.

d. Indiquer si l’antenne est dotée de l’effacement de secteur. Entrer les détails sous Remarques (partie 4, bloc 10b.) si la case « Oui » est cochée.

Part 4, Block 8: Gain

If frequency is between 27.5 MHz and 890 MHz, indicate gain of radiator relative to half wave dipole (dB). If frequency is below 27.5 MHz or above 890 MHz, indicate gain of radiator relative to an isotropic radiator (dBi).

a. enter the maximum gain, in dB; and

b. enter the nominal gain of the first major side lobe, in dB, and the angular displacement from the main beam, in degrees.

Partie 4, Bloc 8 : Gain

Indiquer le gain de l’antenne active par rapport à l’antenne de type doublet demi-onde (en dB) si la fréquence est entre 27.5 MHz et 890 MHz. Indiquer le gain de l’antenne active par rapport à une antenne isotrope (en dB) si la fréquence est au dessous de 27.5 MHz ou au-dessus de 890 MHz.

a. indiquer le gain maximal en dB; et

b. indiquer le gain nominal du premier lobe latéral principal en dB et le déplacement angulaire à partir du faisceau principal en degrés.

Part 4, Block 9: Beamwidth

Enter the 3 dB beam width in degrees.

Part 4, Block 10: Remarks

Describe any unusual characteristics of the antenna, particularly as they relate to the assessment of electromagnetic compatibility and to amplify or clarify any of the information provided above. Use additional pages if necessary. In addition, enter the following information, if applicable:

a. the front-back ratio, in dB, for directional antennas used in radio relay circuits;

b. for phased array antennas enter:

(1) mode of operation, single or multiple beam;

(2) single beam parameters; and

(3) multiple beam parameters:

a) polarization of each beam;

b) gain of each beam;

c) beam width of each beam; and

d) scan characteristics of each beam (Part 4, block 7).

Partie 4, Bloc 9 : Largeur du faisceau

Indiquer la largeur du faisceau à 3 dB en degrés.

Partie 4, Bloc 10 : Remarques

Se servir de ce bloc pour décrire toute caractéristique extraordinaire de l'antenne, particulièrement dans le contexte de l'évaluation de la compatibilité électromagnétique et pour amplifier ou clarifier toute information donnée ci-dessus. Utiliser au besoin des pages supplémentaires. De plus, entrer au besoin l'information suivante :

a. le rapport avant-arrière, en dB, pour les antennes directionnelles utilisées dans les circuits de relais radio;

b. indiquer, dans le cas des antennes à commande de phase :

(1) le mode de fonctionnement, à faisceau simple ou multiple;

(2) les paramètres de faisceau simple; et

(3) les paramètres de faisceau multiple :

a) la polarisation de chaque faisceau;

b) le gain de chaque faisceau;

c) la largeur de faisceau de chaque faisceau; et

d) les caractéristiques de chaque faisceau (partie 4, bloc 7 de la ci dessus).

A3.8 DID – Operator Manual

DATA ITEM DESCRIPTION	
1. TITLE **Operator Manual**	2. IDENTIFICATION NUMBER **DID SUGVS-ILS-202**
3. DESCRIPTION The Operator Manual contains all the essential information required to describe the safe and correct operative procedures and operator maintenance associated with the equipment.	
4. RELATED DOCUMENTS **C-01-100-100/AG-008** *Writer's Guide for Technical Documentation*	5. CONTRACT REFERENCE **SOW**: **Para. 4.4.1.1.1 (pg. 11)** **CDRL: App. A2.2 (pg. 33)**

6 PREPARATION INSTRUCTIONS

6.1 **CONTENT**

6.1.1 The Operator Manual must cover the following topics, and others judged pertinent by the Contractor:

6.1.1.1 General Description/Equipment Overview;

6.1.1.2 Pre-use testing/inspection;

6.1.1.3 Preparation and set up for use;

6.1.1.4 Use and operation, including operation under emergency, adverse, or abnormal conditions, when applicable;

6.1.1.5 Operator Maintenance, IAW the Maintenance Concept para 4.1 (pg. 10);

6.1.1.6 Shut-down and post-shut-down actions and precautions;

6.1.1.7 Preparation for equipment transit by air, land, and sea;

6.1.1.8 Safety/Hazardous material issues;

6.1.2 The Operator Manual material covered in 6.1.1 above, must be amplified by colour illustrations, line drawings, and good quality colour pictures.

6.2 **GENERAL FORMAT**

6.2.1 The Operator Manual must be prepared in the Contractor's format while being in full conformance with the above-stated issue of C-01-100-100/AG-008.

6.2.2 The Operator Manual must include the National Defence Index of Documentation (NDID) number (provided to the Contractor by DND) that must be placed on the top right corner of all the pages of the manual.

6.3 **HARD COPY FORMAT**

6.3.1 The accepted Operator Manual hard copies must be:

6.3.1.1 Printed on paper with these characteristics:

6.3.1.1.1 Standard US Letter Size (270 mm x 216 mm)

6.3.1.1.2 Covers: 290-370 g/m^2 polyester film (such as Pico Film), matt surface and white colour

6.3.1.1.3 Pages: 120-170 g/m^2 polyester film (such as Pico Film), matt surface and white colour

6.3.1.2 Bound with white or black spiral coil (PLASTIKOIL®)

6.4 **SOFT COPY FORMAT**

6.4.1 The Operator Manual must be provided as a PDF file with searchable text that matches the printed publication's format and layout. Links, bookmarks and thumbnails are to be included in the PDF file. All references made to a specific paragraph, figure, appendix must be appropriately linked.

6.4.2 Viewing the Operator Manual PDF: pages, regardless of size, containing text and illustrations in landscape, must be rotated for electronic viewing and reading in landscape.

6.4.3 **Soft Copy format submission size below 7MB** – The Operator Manual PDF and its native file may be submitted via email as follows:

6.4.3.1 To Field: As per the related CDRL section 9.A. Addressee, as identified in the contract.

6.4.3.2 Subject Field: SUGVS-ILS-202 – Operator Manual – [Rev #] – [Date of Issue]

6.4.4 **Soft Copy format submission size at or above 7MB** - The Operator Manual PDF and its native file must be submitted on CD or DVD media and be labelled as follows:

6.4.4.1 Small Unmanned Ground Vehicle System

6.4.4.2 Operator Manual;

6.4.4.3 SUGVS-ILS-202;

6.4.4.4 The Revision number, and

6.4.4.5 The date of issue.

A3.9 DID – Operator Quick Reference Card

DATA ITEM DESCRIPTION	
1. TITLE **Operator Quick Reference Card**	2. IDENTIFICATION NUMBER **DID SUGVS-ILS-203**
3. DESCRIPTION Operator Quick Reference Card (OQRC) will allow the trained user to quickly unpack, assemble, and safely use the equipment.	
4. RELATED DOCUMENTS	5. CONTRACT REFERENCE **SOW**: **Para. 4.4.1.2.1 (pg. 11)** **CDRL**: **App. A2.2 (pg. 33)**

6. PREPARATION INSTRUCTIONS

6.1. **CONTENT**

6.1.1. The OQRC must contain the necessary instructions to allow a trained user to quickly, safely and effectively operate the equipment.

6.1.2. The OQRC must assume that the equipment's initial state is packed in its Hard Transport Container (see Technical Specification(s)).

6.1.3. The OQRC instructions must be based on pictograms illustrating the sequence of steps required while using only minimal text to assist in the understanding of the document. Desired look and feel would be similar to commercial airline safety pamphlets describing the use of oxygen masks, and emergency exits.

6.1.4. The OQRC must not introduce new information and procedures not also described in the Operator Manual, as the Operator Manual is the master document on how to use the equipment.

6.1.5. The OQRC cautionary advisory's heading must be determined based on the criteria set out in ANNEX A SOW para. 4.4.3.1.

6.1.6. The OQRC cautionary advisory must read as follows: "**This Operator Quick Reference Card is intended solely for experienced users who have been trained on this equipment, and have read and understood its Operator Manual** (CFTO# to be supplied by DND). **When in doubt, read the Operator Manual before operating this equipment.**"

6.1.7. The OQRC cautionary advisory must also have, immediately following this text, a brief description of the consequences of misuse of the equipment, linked to the same criteria listed in 6.1.5 above.

6.2. **HARD COPY FORMAT**

6.2.1. The accepted OQRC hard copies must:

6.2.1.1. Be printed on paper with pages of 290-370 g/m^2 polyester film (such as Pico Film), matt surface and white colour, and bound with white or black spiral coil (PLASTIKOIL®);

6.2.1.2. Contain no more than four (3) sheets;

6.2.1.3. Be produced and printed exclusively in black and white.

6.3. **SOFT COPY FORMAT**

6.3.1. The OQRC must be provided as a PDF file with searchable text that matches the printed publication's format and layout. Links, bookmarks and thumbnails are to be included in the PDF file. All references made to a specific paragraph, figure, appendix must be appropriately linked.

6.3.2. Viewing the OQRC PDF: pages, regardless of size, containing text and illustrations in landscape, must be rotated for electronic viewing and reading in landscape.

6.3.3. **Soft Copy format submission size below 7MB** – The OQRC PDF and its native file may be submitted via email as follows:

6.3.3.1. To Field: As per the related CDRL section 9.A. Addressee, as identified in the contract.

6.3.3.2. Subject Field: SUGVS-ILS-203 – OQRC – [Rev #] – [Date of Issue]

6.3.4. **Soft Copy format submission size at or above 7MB** - The OQRC PDF and its native file must be submitted on CD or DVD media and be labelled as follows:

6.3.4.1. Small Unmanned Ground Vehicle System

6.3.4.2. OQRC;

6.3.4.3. SUGVS-ILS-203;

6.3.4.4. The Revision number, and

6.3.4.5. The date of issue.

A3.10 **DID – Repair Manual**

DATA ITEM DESCRIPTION	
1. TITLE **Repair Manual**	2. IDENTIFICATION NUMBER **DID SUGVS-ILS-204**
3. DESCRIPTION The Repair Manual contains all the information required by the Technician to perform preventative and corrective maintenance procedures and troubleshooting of the equipment.	
4. RELATED DOCUMENTS **D-01-100-204/SF-000** *Preparation of Preventive Maintenance Instructions* **D-01-100-205/SF-000** *Preparation of Corrective Maintenance Instructions* **C-01-100-100/AG-008** *Writer's Guide for Technical Documentation*	5. CONTRACT REFERENCE **SOW**: **Para. 4.4.1.3.1 (pg. 11)** **CDRL**: **App. A2.2 (pg. 33)**

6. PREPARATION INSTRUCTIONS

6.1. **CONTENT**

6.1.1. The Repair Manual must provide descriptive essential, preventive and corrective maintenance information on all components, groups of equipment and systems IAW the Maintenance Concept, para. 4.1 (pg. 10).

6.1.2. The Repair Manual text must be amplified by comprehensive system or component illustration, good quality colour pictures, pictograms and schematics.

6.2. **GENERAL FORMAT**

6.2.1. The Repair Manual must be prepared in the Contractor's format and be in full conformance with the current issue of C-01-100-100/AG-008, D-01-100-204/SF-000 and D-01-100-205/SF-000.

6.2.2. The Repair Manual must include the National Defence Index of Documentation (NDID) number (provided to the Contractor by DND) that must be placed on the right top corner of all the pages of the manual.

6.2.3. The Repair Manual should use illustrations, good quality colour pictures and pictograms as much as possible.

6.3. **HARD COPY FORMAT**

6.3.1. The accepted Repair Manual hard copies must be:

6.3.1.1. Printed on paper with these characteristics:

6.3.1.1.1. Standard US Letter Size (216 mm x 270 mm)

6.3.1.1.2. Covers: 290-370 g/m^2 polyester film (such as Pico Film), matt surface and white colour

6.3.1.1.3. Pages: 120-170 g/m^2 polyester film (such as Pico Film), matt surface and white colour

6.3.1.2. Bound with white or black spiral PVC coil (such as PLASTIKOIL®)

6.4. **SOFT COPY FORMAT**

6.4.1. The Repair Manual soft copy format must meet the following:

6.4.1.1. Be a PDF file that matches the printed publication's format and layout. Links, bookmarks, and thumbnails are to be included in the PDF file.

6.4.1.2. All references made to a specific paragraph, figure, appendix must be appropriately linked.

6.4.1.3. Viewing the PDF: pages, regardless of size, containing text and illustrations in landscape, must be rotated for electronic viewing and reading in landscape.

6.4.2. **Soft Copy format submission size below 7MB** – The Repair Manual PDF and its native file may be submitted via email as follows:

6.4.2.1. To Field: As per the related CDRL section 9.A. Addressee, as identified in the contract.

6.4.2.2. Subject Field: SUGVS-ILS-204 – Repair Manual – [Rev #] – [Date of Issue]

6.4.3. **Soft Copy format submission size at or above 7MB** - The Repair Manual PDF and its native file must be submitted on CD or DVD media and be labelled as follows:

6.4.3.1. Small Unmanned Ground Vehicle System

6.4.3.2. Repair Manual;

6.4.3.3. SUGVS-ILS-204;

6.4.3.4. The Revision number, and

6.4.3.5. The date of issue.

A3.11 **DID – Illustrated Parts Manual**

DATA ITEM DESCRIPTION	
1. TITLE **Illustrated Parts Manual**	2. IDENTIFICATION NUMBER **DID SUGVS-ILS-205**
3. DESCRIPTION The Illustrated Parts Manual contains all the necessary information to positively identify all parts of the equipment.	
4. RELATED DOCUMENTS **D-01-100-207/SF-002** *Preparation of Interim Illustrated Parts Manuals for Land Equipment***.**	5. CONTRACT REFERENCE **SOW**: **Para. 4.4.1.4.1 (pg. 11)** **CDRL**: **App. A2.2 (pg. 33)**

6 PREPARATION INSTRUCTIONS

6.1 **CONTENT**

6.1.1 The Illustrated Parts Manual content must be IAW D-01-100-207/SF-002, and the drawings must be sequenced as per the PPB breakdown of assemblies, and a major assembly must be fully broken down before the next major assembly is shown.

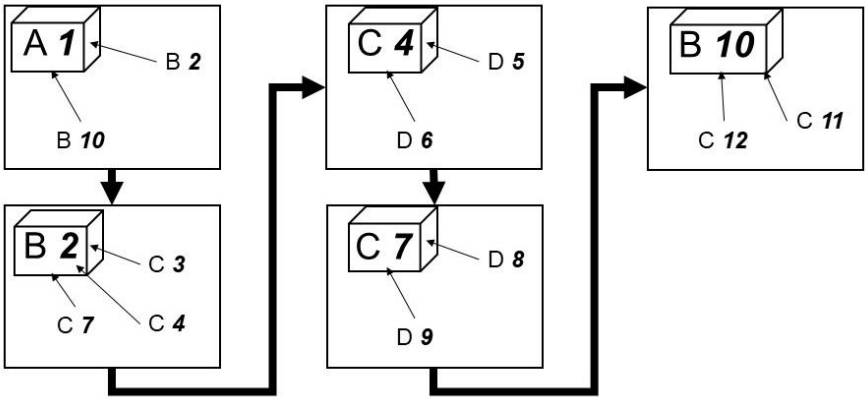

6.1.2 The Illustrated Parts Manual must contain illustrations, exploded views, and drawings and associated lists necessary for the proper identification of all parts, assemblies, and special equipment to the lowest replaceable unit.

6.1.3 The exploded views contained in the Illustrated Parts Manual must amplify the relationship between all parts and assemblies to facilitate repair of the equipment and the replacement of parts and assemblies down to the lowest replaceable unit.

6.1.4 The Illustrated Parts Manual must include the National Defence Index of Documentation (NDID) number (provided to the Contractor by DND) that must be placed on the top right corner of each page of the manual.

6.2 **GENERAL FORMAT**

6.2.1 The format of the Illustrated Parts Manual must be IAW D-01-100-207/SF-002, with the exception that “NCAGE” must be used instead of “NSCM”.

6.2.2 The Illustrated Parts Manual must **not** use photographs as illustrations.

6.3 **HARD COPY FORMAT**

6.3.1 The accepted Illustrated Parts Manual hard copies must be:

6.3.1.1 Printed on paper with these characteristics:

6.3.1.1.1 Standard US Letter Size (216 mm x 270 mm)

6.3.1.1.2 Covers: 290-370 g/m^2 polyester film (such as Pico Film), matt surface and white colour

6.3.1.1.3 Pages: 120-170 g/m^2 polyester film (such as Pico Film), matt surface and white colour

6.3.1.2 Bound with white or black spiral PVC coil (such as PLASTIKOIL®)

6.4 **SOFT COPY FORMAT**

6.4.1 The Illustrated Parts Manual soft copy format must be PDF, with searchable text, with pages rotated as needed for normal viewing on screen.

6.4.2 **Soft Copy format submission size below 7MB** – The Illustrated Parts Manual PDF may be submitted via email as follows:

6.4.2.1 To Field: As per the related CDRL section 9.A. Addressee, as identified in the contract.

6.4.2.2 Subject Field: SUGVS-ILS-205 – Illustrated Parts Manual – [Rev #] – [Date of Issue]

6.4.3 **Soft Copy format submission size at or above 7MB** - The Illustrated Parts Manual PDF and its native file must be submitted on CD or DVD media and be labelled as follows:

6.4.3.1 Small Unmanned Ground Vehicle System

6.4.3.2 Illustrated Parts Manual;

6.4.3.3 SUGVS-ILS-205;

6.4.3.4 The Revision number, and

6.4.3.5 The date of issue.

A3.12 **DID – Operator Training Package**

DATA ITEM DESCRIPTION	
1. TITLE **Operator Training Package**	2. IDENTIFICATION NUMBER **DID SUGVS-ILS-206**
3. DESCRIPTION The Operator Training Package will be used as the reference material during the Training Sessions, and to facilitate future lesson plan preparation on the operation, Operator maintenance and storage of the equipment.	
4. RELATED DOCUMENTS **C-01-100-100/AG-008** *Writer's Guide for Technical Documentation*	5. CONTRACT REFERENCE **SOW**: **Para. 4.4.1.5.1 (pg. 11)** **CDRL**: **App. A2.2 (pg. 33)**

6. PREPARATION INSTRUCTIONS

6.1. **CONTENT**

6.1.1. The Operator Training Package course material must include, in the order judged most appropriate by the Contractor, the following subjects:

6.1.1.1. General Description/Equipment Overview;

6.1.1.2. Pre-use testing/inspection;

6.1.1.3. Preparation and set up for use;

6.1.1.4. Use and operation, including operation under emergency, adverse, or abnormal conditions, when applicable;

6.1.1.5. Preparation for travel and handling;

6.1.1.6. Storage, preservation, exercising, and reactivation procedures;

6.1.1.7. Safety and Hazardous material issues;

6.1.1.8. Operator Troubleshooting and testing;

6.1.1.9. Basic diagnosis and fault finding; and,

6.1.1.10. Operator Maintenance IAW the Maintenance Concept para. 4.1 (pg. 10).

6.1.2. The Operator Training Package course material must be amplified by colour illustrations, line drawings, and good quality colour pictures.

6.1.3. The Operator Training Package course material subjects must be approached from the perspective of an operator familiar with UGVs and experienced in EOD scenarios.

6.1.4. The Operator Training Package course material must not present any information that cannot also be found in the Technical Publication Package documents; those documents remain the primary reference for the equipment.

6.1.5. The Operator Training Package must include a **Student Handout** that includes the course material described above.

6.1.6. The Operator Training Package must include an **Instructor Lesson Plan** that includes the course material described above, speaker's notes, and outlines the following:

6.1.6.1. Classroom's physical and functional requirements;

6.1.6.2. Field area's physical and functional requirements;

6.1.6.3. Training Session schedule, divided by course material subjects;

6.1.6.4. Instructor/Student ratio for the course material subjects;

6.1.6.5. Training materiel to be supplied by the Contractor;

6.1.6.6. Training material to be supplied by Canada.

6.2. **GENERAL FORMAT**

6.2.1. The Operator Training Package can be prepared in the Contractor's format while using C-01-100-100/AG-008 as guidance.

6.2.2. No Contractor or sub-contractor logo, name, trademark, or other wording or device that may be interpreted as advertising must appear in the publication.

6.2.3. The Operator Training Package **Student Handout** must have no more than three (3) slides per page of the course material, and have additional space and lines for note taking.

6.2.4. The Operator Training Package **Instructor Lesson Plan** must have one (1) slide per page of the course material, with the speaker's notes below it.

6.3. **HARD COPY FORMAT**

6.3.1. The Operator Training Package must be furnished in a three (3) ring binder(s) and printed on paper with these characteristics:

6.3.1.1. Weight of no less than 90 g/m^2;

6.3.1.2. Brightness of no less than 96 ISO brightness;

6.4. **SOFT COPY FORMAT**

6.4.1. The Operator Training Package soft copy format must be MS PowerPoint.

6.4.2. **Soft Copy format submission size below 7MB** – The Operator Training Package may be submitted via email as follows:

6.4.2.1. To Field: As per the related CDRL section 9.A. Addressee, as identified in the contract.

6.4.2.2. Subject Field: SUGVS-ILS-206 – Operator Training Package – [Rev #] – [Date of Issue]

6.4.3. **Soft Copy format submission size at or above 7MB** - The Operator Training Package file must be submitted on CD or DVD media and be labelled as follows:

6.4.3.1. Small Unmanned Ground Vehicle System

6.4.3.2. Operator Training Package;

6.4.3.3. SUGVS-ILS-206;

6.4.3.4. The Revision number, and

6.4.3.5. The date of issue.

A3.13 **DID – Technician Training Package**

DATA ITEM DESCRIPTION	
1. TITLE **Technician Training Package**	2. IDENTIFICATION NUMBER **DID SUGVS-ILS-207**
3. DESCRIPTION The Technician Training Package will be used as the reference material during the Training Sessions, and to facilitate future lesson plan preparation on the operation, Technician maintenance and storage of the equipment.	
4. RELATED DOCUMENTS **C-01-100-100/AG-008** *Writer's Guide for Technical Documentation*	5. CONTRACT REFERENCE **SOW**: **Para. 4.4.1.6.1 (pg. 11)** **CDRL**: **App. A2.2 (pg. 33)**

6. PREPARATION INSTRUCTIONS

6.1. **CONTENT**

6.1.1. The Technician Training Package course material must include, in the order judged most appropriate by the Contractor, the following subjects:

6.1.1.1. General Description/Equipment Overview;

6.1.1.2. Pre-use testing/inspection;

6.1.1.3. Preparation and set up for use;

6.1.1.4. Use and operation, including operation under emergency, adverse, or abnormal conditions, when applicable;

6.1.1.5. Storage, preparation for travel, preservation, and handling procedures;

6.1.1.6. Safety and Hazardous material issues;

6.1.1.7. Troubleshooting and testing;

6.1.1.8. Advanced diagnosis and fault finding;

6.1.1.9. Corrective and preventive maintenance procedures that are particular to the equipment versus general mechanical procedures, IAW the Maintenance Concept para. 4.1 (pg. 10).

6.1.2. The Technician Training Package course material must be amplified by colour illustrations, line drawings, and good quality colour pictures.

6.1.3. The Technician Training Package course material subjects must be approached from the perspective of a technician with experience with UGVs in general.

6.1.4. The Technician Training Package course material must not present any information that cannot also be found in the Technical Publication Package documents; those documents remain the primary reference for the equipment.

6.1.5. The Technician Training Package must include a **Student Handout** that includes the course material described above.

6.1.6. The Technician Training Package must include an **Instructor Lesson Plan** that includes the course material described above, speaker's notes, and outlines the following:

6.1.6.1. Classroom's physical and functional requirements;

6.1.6.2. Field area's physical and functional requirements;

6.1.6.3. Training Session schedule divided by course material subjects;

6.1.6.4. Instructor/Student ratio for the course material subjects;

6.1.6.5. Training materiel to be supplied by the Contractor;

6.1.6.6. Training material to be supplied by Canada.

6.2. **GENERAL FORMAT**

6.2.1. The Technician Training Package can be prepared in the Contractor's format, using C-01-100-100/AG-008 as guidance.

6.2.2. No Contractor or sub-contractor logo, name, trademark, or other wording or device that may be interpreted as advertising must appear in the publication.

6.2.3. The Technician Training Package **Student Handout** must have no more than three (3) slides per page of the course material, and have additional space and lines for note taking.

6.2.4. The Technician Training Package **Instructor Lesson Plan** must have one (1) slide per page of the course material, with the speaker's notes below it.

6.3. **HARD COPY FORMAT**

6.3.1. The Technician Training Package must be furnished in a three (3) ring binder(s) and printed on paper with these characteristics:

6.3.1.1. Weight of no less than 90 g/m^2;

6.3.1.2. Brightness of no less than 96 ISO brightness;

6.4. **SOFT COPY FORMAT**

6.4.1. The Technician Training Package soft copy format must be MS PowerPoint.

6.4.2. **Soft Copy format submission size below 7MB** – The Technician Training Package may be submitted via email as follows:

6.4.2.1. To Field: As per the related CDRL section 9.A. Addressee, as identified in the contract.

6.4.2.2. Subject Field: SUGVS-ILS-207 – Technician Training Package – [Rev #] – [Date of Issue]

6.4.3. **Soft Copy format submission size at or above 7MB** - The Technician Training Package file must be submitted on CD or DVD media and be labelled as follows:

6.4.3.1. Small Unmanned Ground Vehicle System

6.4.3.2. Technician Training Package;

6.4.3.3. SUGVS-ILS-207;

6.4.3.4. The Revision number, and

6.4.3.5. The date of issue.

A3.14 DID – Preservation, Storage and Reactivation Instructions

DATA ITEM DESCRIPTION	
1. TITLE **Preservation, Storage and Reactivation Instructions**	2. IDENTIFICATION NUMBER **DID SUGVS-ILS-208**
3. DESCRIPTION The Preservation, Storage and Reactivation Instructions (PSRI) provides guidance for the storage and preservation, in-storage inspections, exercising, and reactivation of equipment.	
4. RELATED DOCUMENTS **D-01-100-211/SF-000** *Preservation, Storage and Handling Instructions* **C-01-100-100/AG-008** *Writer's Guide for Technical Documentation*	5. CONTRACT REFERENCE **SOW**: **Para. 4.4.1.7.1 (pg. 11)** **CDRL**: **App. A2.2 (pg. 33)**

6. PREPARATION INSTRUCTIONS

6.1. **CONTENT**

6.1.1. The PSRI must contain the necessary data as outlined in D-01-100-211/SF-000, *Preservation, Storage and Handling Instructions,* **omitting** Annex A Part 4 – Handling and Shipping.

6.2. **GENERAL FORMAT**

6.2.1. The PSRI must be prepared in the Contractor's format while being in full conformance with the above-stated issue of C-01-100-100/AG-008.

6.2.2. The PSRI must have the National Defence Index of Documentation (NDID) number, provided to the Contractor by DND, on the top right corner of all the pages.

6.3. **HARD COPY FORMAT**

6.3.1. The accepted PSRI hard copies must be:

6.3.1.1. Printed on paper with these characteristics:

6.3.1.1.1. Standard US Letter Size (216 mm x 270 mm)

6.3.1.1.2. Covers: 290-370 g/m^2 polyester film (such as Pico Film), matt surface and white colour

6.3.1.1.3. Pages: 120-170 g/m^2 polyester film (such as Pico Film), matt surface and white colour

6.3.1.2. Bound with white or black spiral PVC coil (such as PLASTIKOIL®)

6.4. **SOFT COPY FORMAT**

6.4.1. The PSRI must be provided as a PDF file with searchable text that matches the printed publication's format and layout. Links, bookmarks and thumbnails are to be included in the PDF file. All references made to a specific paragraph, figure, appendix must be appropriately linked.

6.4.2. Viewing the PDF version: pages, regardless of size, containing text and illustrations in landscape, must be rotated for electronic viewing and reading in landscape.

6.4.3. **Soft Copy format submission size below 7MB** – The PRSI PDF and its native file may be submitted via email as follows:

6.4.3.1. To Field: As per the related CDRL section 9.A. Addressee, as identified in the contract.

6.4.3.2. Subject Field: SUGVS-ILS-208 – PRSI – [Rev #] – [Date of Issue]

6.4.4. **Soft Copy format submission size at or above 7MB** - The PRSI PDF and its native file must be submitted on CD or DVD media and be labelled as follows:

6.4.4.1. Small Unmanned Ground Vehicle System

6.4.4.2. PRSI;

6.4.4.3. SUGVS-ILS-208;

6.4.4.4. The Revision number, and

6.4.4.5. The date of issue.

A3.15 **DID – Provisioning Parts Breakdown**

DATA ITEM DESCRIPTION	
1. TITLE **Provisioning Parts Breakdown**	2. IDENTIFICATION NUMBER **DID SUGVS-ILS-209**
3. DESCRIPTION The Provisioning Parts Breakdown (PPB) is a top-down breakdown of the equipment in the configuration in which it is being procured.	
4. RELATED DOCUMENTS **D-01-100-214/SF-000** *Specification for Preparation of Provisioning Documentation for Canadian Forces Equipment*	5. CONTRACT REFERENCE **SOW**: **Para. 4.5.3.1.1 (pg. 14)** **CDRL**: **App. A2.2 (pg. 33)**

6 PREPARATION INSTRUCTIONS

6.1 **CONTENT**

6.1.1 The PPB must be prepared IAW in D-01-100-214/SF-000, with modifications listed below.

6.1.2 The following data fields must be added to the PPB:

6.1.2.1 *Quantity per End Item (QPEI):* Between Fields number 9 and 10, refers to the total number of times the item is used in the whole prime equipment (A-level). This field may contain whatever number of numeric characters needed to show the quantities.

6.1.2.2 *SPTD filename:* As the last Field, must contain the line item's applicable SPTD filename. This field may be whatever size adequate to fully show the data therein.

6.1.3 Common fasteners and hardware (items with "Y" indention code) must have an Item Name that describes their key characteristics so that equivalents can be identified from alternate sources, as possible within the mandated field size. Example: "Hex Head Screw M8 x 1.25mm, 30mm Lg, 18-8 SS".

6.1.4 For clarity:

6.1.4.1 *Original Equipment Manufacturer's Part Number* refers only to the Contractor which DND has contracted to supply the equipment; data from sub-contractors for items that they did not manufacture or do not control are not permitted. This field may be left blank if no data is available, or if it is the same as the Manufacturer's Reference Number (MRN).

6.1.4.2 *Quantity per Assembly* (QPA) refers to the number of times the item is used in the next higher assembly. For example, a C-level item's QPA will show the number of times it is used in its related B-level assembly, without being multiplied by the number of B-level assemblies.

6.1.4.3 *NATO Commercial and Government Entity* (NCAGE) Codes can be searched and requested through the NATO portal: https://eportal.nspa.nato.int/AC135Public/scage/CageList.aspx.

6.1.5 The Source Maintenance and Recoverability (SMR) Codes are used to communicate maintenance and supply instructions to the various logistic support levels and user organizations for the logistic support of systems, equipment, and end items. The PPB SMR Codes must be chosen from the following list:

SMR Field Position	**Code**	**Application/Explanation**
First and Second Position Source Codes	PA	Item procured and stocked for anticipated or known usage. Items are normally considered for replenishment
	PC	Item procured and stocked, but is deteriorative in nature.
	PF	Support equipment which will not be stocked, but which will be centrally procured on demand.
	XA	Item is not procured or stocked because the requirements for the item will result in the replacement of the next higher assembly

	XC	Installation drawing, diagram, instruction sheet, or field Service drawing, that is identified by the manufacturers' part number.
Third Position Maintenance Codes	C	Support item is removed, replaced, used by the operator/crew.
	O	Support item is removed, replaced, or used at the Technician Maintenance level.
	K	Repairable item. Item is removed, replaced, or used at contractor facility.
Fourth Position Repair Codes	C	The lowest maintenance activity capable of complete repair of the support item is the operator/crew.
	O	The lowest maintenance activity capable of complete repair of the support item is the Technician Maintenance level.
	K	Repairable support item. Complete repair capability exists at a designated contractor facility.
	Z	Non-repairable.
Fifth Position Recoverability Codes	C	Repairable item. When uneconomically repairable, condemn and disposed by the operator/crew.
	Z	Non-repairable item. When item becomes unserviceable, condemn and disposed of by authorized activity.
	O	Repairable item. When uneconomically repairable, condemn and dispose at organizational activity.
	K	Repairable item. Condemnation and disposal to be performed at contractor facility.

6.2 **GENERAL FORMAT**

6.2.1 The PPB must be prepared as an MS Excel spreadsheet, formatted IAW D-01-100-214/SF-000, taking into account the modifications listed in para 6.1.2 above.

6.3 **SOFT COPY FORMAT**

6.3.1 **Soft Copy format submission size below 7MB** – The PPB may be submitted via email as follows:

6.3.1.1 To Field: As per the related CDRL section 9.A. Addressee, as identified in the contract.

6.3.1.2 Subject Field: SUGVS-ILS-209 – PPB – [Rev #] – [Date of Issue]

6.3.2 **Soft Copy format submission size at or above 7MB** - The PPB file must be submitted on CD or DVD media and be labelled as follows:

6.3.2.1 Small Unmanned Ground Vehicle System

6.3.2.2 Provisioning Parts Breakdown;

6.3.2.3 SUGVS-ILS-209;

6.3.2.4 The Revision number, and

6.3.2.5 The date of issue.

A3.16 DID – Supplementary Provisioning Technical Documentation

DATA ITEM DESCRIPTION	
1. TITLE **Supplementary Provisioning Technical Documentation**	2. IDENTIFICATION NUMBER **DID SUGVS-ILS-210**
3. DESCRIPTION The Supplementary Provisioning Technical Documentation (SPTD) fully identifies and describes part(s) that may be catalogued.	
4. RELATED DOCUMENTS **D-01-100-214/SF-000** *Specification for Preparation of Provisioning Documentation for Canadian Forces Equipment*	5. CONTRACT REFERENCE **SOW**: **Para. 4.5.3.2.1 (pg. 14)** **CDRL**: **App. A2.2 (pg. 33)**

6. **PREPARATION INSTRUCTIONS**

6.1. **CONTENT**

6.1.1. The Supplementary Provisioning Technical Documentation (SPTD) must be provided for each item appearing on the Provisioning Documentation, IAW D-01-100-214/SF-000.

6.1.2. The SPTD must include the technical data required for DND to classify and fully describe the item within the NATO codification system, allowing for item identification and cataloguing purposes.

6.2. **SOFT COPY FORMAT**

6.2.1. The SPTD must be submitted with filenames in the following format: (MRN)_(NCAGE)_(item name).(software extension).

6.2.2. **Soft Copy format submission size below 7MB** – The SPTD may be submitted via email as follows:

6.2.2.1. To Field: As per the related CDRL section 9.A. Addressee, as identified in the contract.

6.2.2.2. Subject Field: SUGVS-ILS-210 – SPTD – [Rev #] – [Date of Issue]

6.2.3. **Soft Copy format submission size at or above 7MB** – The SPTD must be submitted on CD or DVD media and be labelled as follows:

6.2.3.1. Small Unmanned Ground Vehicle System

6.2.3.2. SPTD;

6.2.3.3. SUGVS-ILS-210;

6.2.3.4. The Revision number, and

6.2.3.5. The date of issue.

A3.17 DID – Material Identification Data Set

DATA ITEM DESCRIPTION	
1. TITLE **Material Identification Data Set**	2. IDENTIFICATION NUMBER **DID SUGVS-ILS-211**
3. DESCRIPTION To identify the data elements and format required to complete the Materiel Identification Data Set (MIDS) for each serialized item being procured. This data will be used to create the SUGVS Equipment Master Record.	
4. RELATED DOCUMENTS	5. CONTRACT REFERENCE **SOW**: **Para. 4.5.3.3.1 (pg. 14)** **CDRL**: **App. A2.2 (pg. 33)**

6. PREPARATION INSTRUCTIONS

6.1. **CONTENT**

6.1.1. The MIDS must contain the following data:

6.1.1.1. Unique Item Identification

6.1.1.1.1. Item Description (English)

6.1.1.1.2. Item Description (French)

6.1.1.1.3. Manufacturer's NCAGE

6.1.1.1.4. Manufacturer's Part Number (MPN)

6.1.1.1.5. Manufacturer's Serial Number

6.1.1.2. Parent Identification (where installed in higher level assembly):

6.1.1.2.1. Parent Manufacturer's NCAGE

6.1.1.2.2. Parent Manufacturer's Part Number (MPN)

6.1.1.2.3. Parent Manufacturer's Serial Number (if known)

6.2. **GENERAL FORMAT**

6.2.1. The MIDS must be presented in accordance with the MIDS Excel Sheet template referenced.

6.3. **SOFT COPY FORMAT**

6.3.1. 6.3.1. The MIDS must be delivered as an Excel spreadsheet.

6.3.2. **Soft Copy format submission size below 7MB** – The MIDS may be submitted via email as follows:

6.3.2.1. To Field: As per the related CDRL section 9.A. Addressee, as identified in the contract.

6.3.2.2. Subject Field: SUGVS-ILS-211 – MIDS – [Rev #] – [Date of Issue]

6.3.3. **Soft Copy format submission size at or above 7MB** – The MIDS file must be submitted on CD or DVD media and be labelled as follows:

6.3.3.1. Small Unmanned Ground Vehicle System

6.3.3.2. MIDS

6.3.3.3. SUGVS-ILS-211;

6.3.3.4. The Revision number, and

6.3.3.5. The date of issue.

A3.18 DID – Identification Plates – Design Template & Populated Designs

DATA ITEM DESCRIPTION	
1. TITLE **Identification Plates – Design Template & Populated Designs**	2. IDENTIFICATION NUMBER **DID SUGVS-ILS-212**
3. DESCRIPTION The Identification Plates uniquely identify equipment and components and spares based on the procedures governing the identification marking of Canadian military property.	
4. RELATED DOCUMENTS **D-02-002-001/SG-001** *Canadian Forces Standard Identification Marking of Canadian Military Property* **D-01-400-002/SF-000** *Specification - Levels of Engineering Drawings* **STANAG 2290 Ed. 2** *NATO Unique Identification of Items*	5. CONTRACT REFERENCE **SOW**: **Para. 4.7.1 (pg. 15)** **CDRL**: **App. A2.2 (pg. 33)**

6. PREPARATION INSTRUCTIONS

6.1. **CONTENT AND GENERAL FORMAT**

6.1.1. In accordance with D-02-002-001/SG-001, the Identification Plates affixed to each item included in Annex A SOW para 4.7.2 must be of size, format, and construction appropriate for the item being identified, and contain the data required for those Identification Plate formats in both official languages.

6.1.2. The Identification Plates Design Template & Populated Designs must be prepared as representative Level 2 drawings (see D-01-400-002/SF-000).

6.1.2.1. The Level 2 drawings must include the mounting or installation method for each Identification Plate, with any fasteners described by size, and/or technical standard, and/or NSN, and quantity.

6.1.3. Identification Plates for serially managed items must include a Unique Item Identifier in accordance with STANAG 2290 Ed. 2.

6.1.3.1. Identification Plates Design Template & Populated Designs must include Unique Item Identifier mark data qualifier and data elements.

6.2. **HARD COPY FORMAT**

6.2.1. The Identification Plates Design Template & Populated Designs must be:

6.2.1.1. Printed in 1:1 scale;

6.2.1.2. Printed on Standard US Ledger size paper (432 mm x 279 mm), with a:

6.2.1.2.1. Weight of no less than 90 g/m^2;

6.2.1.2.2. Brightness of no less than 96 ISO brightness;

6.3. **SOFT COPY FORMAT**

6.3.1. The Identification Plates Design Template & Populated Designs must be provided as PDF files, filename labelled in the following way: [Item Name]_[MRN].pdf.

6.3.2. The Identification Plates Design Template and Populated Designs PDFs containing text and illustrations in landscape, must be rotated for electronic viewing and reading in landscape.

6.3.3. **Soft Copy format submission size below 7MB** – The Identification Plates Design Template & Populated Designs may be submitted via email as follows:

6.3.3.1. To Field: As per the related CDRL section 9.A. Addressee, as identified in the contract.

6.3.3.2. Subject Field: SUGVS-ILS-212 – Identification Plates – [Rev #] – [Date of Issue]

6.3.4. **Soft Copy format submission size at or above 7MB** – The Identification Plates Design Template & Populated Designs file must be submitted on CD or DVD media and be labelled as follows:

6.3.4.1. Small Unmanned Ground Vehicle System

6.3.4.2. Identification Plates

6.3.4.3. SUGVS-ILS-212;

6.3.4.4. The Revision number, and

6.3.4.5. The date of issue.

A3.19 **DID – Controlled & Non-Controlled Goods List**

DATA ITEM DESCRIPTION	
1. TITLE **Controlled & Non-Controlled Goods List (CNCGL)**	2. IDENTIFICATION NUMBER **DID SUGVS-ILS-213**
3. DESCRIPTION Controlled Goods Items – The CNCGL identifies if the controlled goods end items, components and sub-components of the equipment are specifically designed and modified for military purpose, and provides the Demilitarization Instructions if required. Non-Controlled Goods Items – The CNCGL still includes non-controlled goods end items, components and sub-components of the equipment, as they will still require a DMC assignment.	
4. RELATED DOCUMENTS **C-02-007-000/AG-001** *Controlled Technology Access and Transfer (CTAT) Manual*	5. CONTRACT REFERENCE **SOW**: **Para. 4.8.1 (pg. 15)** **CDRL**: **App. A2.2 (pg. 33)**

6. PREPARATION INSTRUCTIONS

6.1. **CONTENT**

6.1.1. The CNCGL must identify end items accordingly, IAW C-02-007-000/AG-001:

6.1.1.1. For Canadian origin items, Canada's Export Control List (ECL) articles that apply in accordance with the Defence Product Act (DPA);

6.1.1.2. For US origin dual use, the Export Control Classification Number (ECCN) of the Commerce Control List that applies;

6.1.1.3. For US origin controlled goods also known as defence articles, the United States Munitions List (USML) Category and paragraph that apply in accordance with the International Traffic in Arms Regulations (ITAR);

6.1.1.4. For all other countries other than Canada and the USA, the category and article of the Wassenaar Control List that applies, and

6.1.1.5. All items require a Demilitarization Code (DMC).

6.2. **GENERAL FORMAT**

6.2.1. The CNCGL must be in spreadsheet format with 6 columns:

6.2.1.1. Item name;

6.2.1.2. Manufacturer's Reference Part Number;

6.2.1.3. Ref para for Canadian origin items (ECL);

6.2.1.4. Ref para for US origin controlled goods (USML);

6.2.1.5. Demilitarization Code (DMC);

6.2.1.6. Formal Demilitarisation Instructions, if DMC is F;

6.2.1.7. Remarks.

6.3. **HARD COPY FORMAT**

6.3.1. The CNCGL must be printed on paper with these characteristics:

6.3.1.1. Weight of no less than 90 g/m^2;

6.3.1.2. Brightness of no less than 96 ISO brightness;

6.4. **SOFT COPY FORMAT**

6.4.1. The CNCGL must be provided as an MS Excel Spreadsheet file.

6.4.2. **Soft Copy format submission size below 7MB** – The CNCGL may be submitted via email as follows:

6.4.2.1. To Field: As per the related CDRL section 9.A. Addressee, as identified in the contract.

6.4.2.2. Subject Field: SUGVS-ILS-213 – CNCGL – [Rev #] – [Date of Issue]

6.4.3. **Soft Copy format submission size at or above 7MB** – The CNCGL file must be submitted on CD or DVD media and be labelled as follows:

6.4.3.1. Small Unmanned Ground Vehicle System

6.4.3.2. CNCGL

6.4.3.3. SUGVS-ILS-213;

6.4.3.4. The Revision number, and

6.4.3.5. The date of issue.

A3.20 DID – Identification Labels for Storage & Shipment and Packaging Codes

DATA ITEM DESCRIPTION	
1. TITLE **Identification Labels for Storage & Shipment and Packaging Codes**	2. IDENTIFICATION NUMBER **DID SUGVS-ILS-214**
3. DESCRIPTION The Identification Labels for Storage & Shipment and Packaging Codes (CF271 forms) ensures that the labelling used to identify packages for items procured by DND and shipped to and stored at a Canadian facility comply with CAF specifications. As well, this will allow DND to obtain a complete record of packaging codes for catalogued items of the equipment.	
4. RELATED DOCUMENTS **D-LM-008-011/SF-001** *Preparation and Use of Packaging Requirements Codes* **D-LM-008-002/SF-001** *Specification for Marking for Storage and Shipment* **D-01-400-002/SF-000** Specification - *Levels of Engineering Drawings* **CF271** *Form (MS Excel version provided by DND after contract award)*	5. CONTRACT REFERENCE **SOW**: **Para. 4.9.3 (pg. 16)** **CDRL**: **App. A2.2 (pg. 33)**

6. PREPARATION INSTRUCTIONS

6.1. **CONTENT AND GENERAL FORMAT**

6.1.1. The Identification Labels for Storage & Shipment design, populated with the appropriate data, must be provided as Level 1 drawings (see D-01-400-002/SF-000) and include dimensions to show the measurements as defined by D-LM-008-002/SF-001 (example: text size, bar code dimensions).

6.1.2. A separate Packaging Code (CF271 Form) must be provided electronically for each item that:

6.1.2.1. Requires special packaging, packing, or preservation considerations to meet the required protection level (see 4.9.1 of the SOW), as per D-LM-008-011/SF-001 (see Table 1 below); and,

6.1.2.2. Has a NATO Stock Number (NSN).

6.1.3. The CF271 forms' file name must correspond to the item listed within, either by its part number or NSN (example: CF271 9422-01-552-8836.xls).

6.2. **HARD COPY FORMAT**

6.2.1. The Identification Labels for Storage & Shipment designs must be printed on paper with these characteristics:

6.2.1.1. Standard US Ledger size (432 mm x 279 mm)

6.2.1.2. Weight of no less than 90 g/m^2;

6.2.1.3. Brightness of no less than 96 ISO brightness;

6.3. **SOFT COPY FORMAT**

6.3.1. The Identification Labels for Storage & Shipment designs must be provided as PDF files.

6.3.2. The Identification Labels for Storage & Shipment designs PDFs containing text and illustrations in landscape, must be rotated for electronic viewing and reading in landscape.

6.3.3. The Packaging Codes (CF271 forms) must be provided as MS Excel Spreadsheet files.

6.3.4. **Soft Copy format submission size below 7MB** – The Identification Labels for Storage & Shipment and Packaging Codes may be submitted via email as follows:

6.3.4.1. To Field: As per the related CDRL section 9.A. Addressee, as identified in the contract.

6.3.4.2. Subject Field: SUGVS-ILS-214 – Identification Labels for Storage & Shipment and Packaging Codes – [Rev #] – [Date of Issue]

6.3.5. **Soft Copy format submission size at or above 7MB** – The Identification Labels for Storage & Shipment and Packaging Codes files must be submitted on CD or DVD media and be labelled as follows:

6.3.5.1. Small Unmanned Ground Vehicle System

6.3.5.2. Identification Labels for Storage & Shipment and Packaging Codes

6.3.5.3. SUGVS-ILS-214;

6.3.5.4. The Revision number, and

6.3.5.5. The date of issue.

NATO STOCK NUMBER (NSN) - NUMÉRO DE NOMENCLATURE DE L'OTAN (NNO)

NSC - CSO	NCB - SNC	NIN - NIA	CARD NO CARTE NO	U.I. U.D.
			0 4	E A

PACKAGING DATA
DONNÉES D'EMBALLAGE

APPROVAL STAMP
SCEAU D'APPROBATION

ESSENTIAL PRESERVATION AND PACKAGING DATA - DONNÉES ESSENTIELLES - PRÉSERVATION ET EMBALLAGE

SEQ SUCC	DM MD	CATEGORY CATÉGORIE	METHOD MÉTHODE	QTY UNIT PACK - QTÉ PAR UNITÉ D'EMBALLAGE	CLEAN NETTOYAGE	PRESV. MAT. MAT. PRÉS.	WRAP MAT. MAT. EMB	CUSHION AND DUNNAGE BOURRAGE ET FAÇAGE	CUSH THICK EPAISS. BOURR.	UNIT CONT. CONT. UNIT	INTER. QTY QTE	INTER. CONT.	LAYER, OF PROT. COUCHE DE PROT.	MAX WEIGHT CODE CODE POIDS MAX	MAX CUBE CODE CODE VOLUME MAX	UNIT CONTAINER DIMENSIONS DIMENSIONS DU CONTENANT PAR UNITÉ LENGTH LONGUEUR	WIDTH LARGEUR	DEPTH PROFONDEUR	CONT. LEVEL CONT.	QTY PACK. NO. NBR. EMB.	SUP. PACK. L.O. SUPPL.
			10	1	1	00	YY	L_	A	D4	1	E6	B			8	6	4	B	0	1
18		41 42 43 44 45 46	47 48	49	50	51 52	53 54	55 56	57	58 59	60	61 62	63	64	65	66 67	68 69	70 71	72 73	74	75 76

SEQ SUCC SUPPLEMENTAL PACKAGING AND PRESERVATION DATA- DONNÉES SUPPLÉMENTAIRES - PRÉSERVATION ET EMBALLAGE

18	40 41 42 43 44 45 46 47 48 49 50 51 52 53 54 55 56 57 58 59 60 61 62 63 64 65 66 67 68 69 70 71 72 73 74 75 76 77 78 79 80
A	DVB power Adapter will be in a thin paper board box, then wrapped in bubble wrap, and shipped in a cardboard box.
B	
C	
D	

PACKAGING FOR TRANSPORTATION SUPPORT DONNÉES SPÉCIALES EMBALLAGE POUR TRANSPORT

SEQ SUCC	SHIPPING CONTAINER DIMENSIONS DU CONTENANT D'EXPÉDITION LENGTH - INCHES LONGUEUR - POUCES	WIDTH - INCHES LARGEUR - POUCES	DIMENSIONS DEPTH - INCHES PROFONDEUR - POUCES	SHIPPING CONTAINER WEIGHT DU CONTENANT D'EXPÉDITION WHOLE LBS LIVRES ENTIÈRES	PODS 100 TH 100 E	SHIPPING CONTAINER CUBE DU CONTENANT D'EXPÉDITION WHOLE CUBE FT PIED CUBE ENTIER	VOLUME 100 TH 100 E	SHIPPING CONTAINER QTY/QTÉ CONTENANT D'EXPÉDITION	CONT LEVEL NIVEAU CONT	TYPE OF CONT GENRE DE CONT
X	8	6	4	0	7	0	11	1	B	E6
18	35 36 37 38 39 40 41	42 43 44 45 46 47	48 49 50	51 52 53	54 55 56 57	58 59	60	61	62 63	

	BASIC - DE BASE	INTERMEDIATE INTERMÉDIATE	BULK - EN VRAC
DETAIL - DÉTAIL			
METHOD/LEVEL MÉTHODE/NIVEAU			
CLEANING NETTOYAGE			
DRYING SÉCHAGE			
PRESERVATION PRÉSERVATION			
INITIAL WRAP EMBALLAGE INITIAL			
CUSH/DUNNAGE BOURRAGE/FARDAGE			
CONTAINER CONTENANT			
CUBE VOLUME			
WEIGHT POIDS	0.7 LBS.		
QUANTITY QUANTITÉ	1		

ITEM NAME NOM DE L'ARTICLE	ORIGINATOR - EXPÉDITEUR	DATE
DVB- Power Adapter	Medit Inc.	

SPECIAL INSTRUCTIONS INSTRUCTION SPÉCIALES

CF 271.XLS 4 CFDAR 2004

Table 1: Sample CF271 form

A3.21 **DID – List of Items to be Supported**

DATA ITEM DESCRIPTION	
1. TITLE **List of Items to be Supported**	2. IDENTIFICATION NUMBER **DID SUGVS-ILS-215**
3. DESCRIPTION The List of Items to be Supported (LIS) will provide the repairable/consumable item data and technical data, which will be supported once the system is delivered. DND will use this information, along with the provisioning data, to populate the Support SOW Appendix A1.0 tables.	
4. RELATED DOCUMENTS	5. CONTRACT REFERENCE **SOW**: **Para. 4.10.1 (pg. 16)** **CDRL**: **App. A2.2 (pg. 33)**

6. PREPARATION INSTRUCTIONS

6.1. **CONTENT**

6.1.1. The LIS must provide an overview and understanding to DND on how the SUGVS and its associated equipment will be supported once the SUGVS is delivered. Refer to the Support SOW for further information.

6.1.2. The LIS must provide the following completed tables, stemming from the Concept of Operation & Support (in accordance with the Support SOW), and in accordance with the Maintenance Concept ANNEX A paragraph 4.1 (page 10):

6.1.2.1. Supported Equipment and Spares Table – This includes the repairable equipment or components of the complete system, STTE, and consumable equipment.

6.1.2.2. Supported Technical Data Table – This includes the Technical Data and publications, and training material for which the Contractor will provide support.

6.2. **GENERAL FORMAT**

6.2.1. The LIS must be prepared as an MS Word document with tables.

6.3. **SOFT COPY FORMAT**

6.3.1. The LIS must be provided as an MS Word file.

6.3.2. **Soft Copy format submission size below 7MB** – The LIS may be submitted via email as follows:

6.3.2.1. To Field: As per the related CDRL section 9.A. Addressee, as identified in the contract.

6.3.2.2. Subject Field: SUGVS-ILS-215 – LIS – [Rev #] – [Date of Issue]

6.3.3. **Soft Copy format submission size at or above 7MB** – The LIS file must be submitted on CD or DVD media and be labelled as follows:

6.3.3.1. Small Unmanned Ground Vehicle System

6.3.3.2. LIS

6.3.3.3. SUGVS-ILS-215;

6.3.3.4. The Revision number, and

6.3.3.5. The date of issue.

Supported Equipment and Spares Table

An explanation of each column is detailed below:

1. System Identifier MRN/OEM Part No – A unique identifier for the Item, as used in the applicable technical manuals or supply management system.

2. Item Nomenclature – The name of the Item that may include Item class/group categories and functional descriptors.
3. NATO Stock Number (NSN) – The 13-digit identifier used in NATO and allied cataloguing systems. The NSN will be included if the Item is to be ordered by DND.
4. Regular or Free-Flow R&O by Item
    a. Repair Cost Estimate (RCE) – Identifies that the item will require a cost estimate before repairs or overhaul can begin.
        i. This is used for regular R&O when equipment is more complex so the TA requires more visibility on what is being proposed, has not yet reached steady-state and is therefore harder to predict typical repair costs/requirements, and repairs occur at a low rate.
    b. Maximum Repair Cost (MRC) – Identifies the maximum amount authorized that includes all labour and material costs, to be expended to repair an item. Repairs above the MRC must be approved by DND before any repair or overhaul work commences. Standard Selection Notice Observation Message procedures as detailed in A-LM-184-001/JS-001 must apply.
        i. This is used for free-flow R&O when equipment repairs are well understood or are less complex, and are used for repairs that occur at a high rate.
5. Repair Turn-Around-Time (TAT) – Identifies the Repair TAT, if different from the general Repair TAT, as defined in Support SOW, indicating that this item is of greater importance to the operation of the SUGVS and therefore requires a faster turn-around. Repair TAT is indicated in calendar days; if left blank, then general Repair TAT is followed.

NOTE: INFORMATION IN THIS TABLE WILL BE FINALIZED AFTER DELIVERY AND ACCEPTANCE OF THE PROVISIONING DOCUMENTATION.

Item Identifier MRN/OEM Part No. (1)	Item Nomenclature (2)	NSN (if item can be ordered) (3)	Regular or Free-Flow RCE/MRC (4)	Repair TAT (cal. Days) (5)

Supported Technical Data Table

An explanation of each column is detailed below:

1. Publication Number – The unique identifier for the published Item of Technical Data.

2. Title – The title of the item of Technical Data.

NOTE: INFORMATION IN THIS TABLE WILL BE FINALIZED AFTER DELIVERY AND ACCEPTANCE OF THE TECHNICAL PUBLICATIONS.

Publication Identifier (1)	Title (2)

A3.22 **DID – Equipment Environmental Assessment**

DATA ITEM DESCRIPTION	
1. TITLE **Equipment Environmental Assessment (EEA)**	2. IDENTIFICATION NUMBER **DID SUGVS-ILS-216**
3. DESCRIPTION The EEA identifies and documents potential environmental impacts of the equipment over the entire life-cycle and the associated mitigation measures required to reduce or eliminate them.	
4. RELATED DOCUMENTS	5. CONTRACT REFERENCE **SOW**: **Para. 5.4.1 (pg. 19)** **CDRL**: **App. A2.2 (pg. 33)**

6. PREPARATION INSTRUCTIONS

6.1. **CONTENT**

6.1.1. **Title Page**

6.1.1.1. Equipment Name and NSN (if available).

6.1.1.2. Assessment Contact: Name, title and company name of the author of the EEA.

6.1.2. **Executive Summary**

6.1.2.1. Provide a brief summary of potential environmental impacts and recommended mitigation measures for each life-cycle (test and evaluation following production, operation and maintenance, and demilitarization and disposal).

6.1.3. **Equipment Description**

6.1.3.1. Equipment description: Provide an overview of the equipment and identify each major sub-system as per the Equipment Breakdown Structure.

6.1.3.2. For each major sub-system, identify the following:

6.1.3.2.1. Hazardous substances that are incorporated into the equipment. Provide additional information in tabular form in Table 1.

6.1.3.2.2. Chemical products listed in Table 1.

6.1.3.2.3. Ionizing radiation sources (radioisotopes and x-ray). e.g. Uranium, Radon, plutonium and tritium etc. in Table 2.

6.1.3.2.4. Non-ionizing radiation sources (radiofrequency and lasers) in Table 2.

6.1.3.3. Provide Safety Data Sheets (SDS) that are less than three years old for all chemical products in accordance with WHMIS 2015 requirements in Annex A for all chemical products.

6.1.4. **Environmental Assessment**

6.1.4.1. For each lifecycle phase (test and evaluation following production, operation and maintenance, and demilitarization and disposal) discuss the following:

6.1.4.1.1. Lifecycle activities: Describe anticipated activities (including operator and maintenance tasks that are detailed in Contractor provided Technical Documentation) and identify if any of these activities have the potential to: release a polluting substance to air, water or land (e.g. exhaust emissions, hazardous waste, spills, etc.); impact human health; noise or vibration; and/or alter landscape features. Note: The scope of the EEA excludes activities related to the use of munitions.

6.1.4.1.2. Environmental impacts: Describe the potential environmental impacts identified above.

6.1.4.1.3. Mitigation Measures: Describe mitigation measures to eliminate or reduce identified potential environmental impacts, including those that are part of the design, any warning devices,

emission control equipment, spill response, safe handling and disposal procedures, training, PPE, labels on equipment, cautions and warnings in the Technical Documentation, monitoring or inspections, etc.

6.1.5. **Conclusions and Recommendations**

6.1.5.1. Summarize the main environmental impacts and recommended mitigation measures.

6.1.6. **References**

6.1.6.1. List references consulted in the completion of the tables (such as Canadian legislation, DND policies and procedures, technical documentation, etc.).

6.1.7. **Table 1 - Identification of Hazardous Substances and Chemical Products**

Table 1 lists the integrated hazardous substances and chemical products that must be identified, if they are incorporated in the equipment design. The hazardous chemical products must have safety data sheets (SDS) which conform to WHMIS 2015, and must be provided in Annex A.

Integrated Hazardous Substances	**NSN**	**Original OEM Part Number**	**Item Description**	**Location**	**Additional Details**
Arsenic, Cadmium, Chromium VI, Cobalt, Lead, Radioactive metals					
Halocarbons – refrigerant and air-conditioning systems					Type and weight (kg). Global Warming Potential of Hydrofluorocarbons used for refrigerant applications.
Mercury and its compounds					Form of mercury (e.g. liquid, vapour) and weight (mg)
Polychlorinated Biphenyl (PCBs)					Form (liquid or solid), quantity (kg), volume (L) and concentration in ppm
Hazardous Chemical Products (SDS Required)	**NSN**	**Original OEM Part Number**	**Ingredient**	**Chemical Abstract Service Number (CAS#)**	**Controls***
Halocarbons – Fire extinguishing systems					
Halocarbons – In aerosol Products					
Paints and related commodities (CARC and non-CARC)					
Fire-fighting Foams					
Cleaner and Degreasers					
POLs (Petroleum, Oils, Lubricants)					
Adhesives					
Anti-seize					
Corrosion Inhibitor					
Decontaminant					
Detector Kit Chemical substances					

*Controls: Identify if the substance is regulated under the Canadian Environmental Protection Act, targeted in Schedule 1, Toxic Substance List under CEPA and/or subject to the reporting requirements under the National Pollutant Release Inventory (NPRI).

6.1.8. **Table 2 – Identification of radiation sources and batteries**

Table 2 lists the ionizing and non-ionizing radiation sources and batteries.

Categories	**NSN**	**Original OEM Part Number**	**Item Description**	**Location ***	**Additional Details**
Non-ionizing radiation					Type of electromagnetic energy (laser, microwave, radio frequency) and strength
Ionizing radiation					Type and quantity or activity level

Batteries					Type

* Identify the system/sub-system where these items are located.

6.1.9. **Annex A – Safety Data Sheets SDS for all chemical products identified in the EEA**

6.2. **SOFT COPY FORMAT**

6.2.1. The EEA must be provided as a PDF file.

6.2.2. **Soft Copy format submission size below 7MB** – The EEA may be submitted via email as follows:

6.2.2.1. To Field: As per the related CDRL section 9.A. Addressee, as identified in the contract.

6.2.2.2. Subject Field: SUGVS-ILS-216 – EEA – [Rev #] – [Date of Issue]

6.2.3. **Soft Copy format submission size at or above 7MB** – The EEA file must be submitted on CD or DVD media and be labelled as follows:

6.2.3.1. Small Unmanned Ground Vehicle System

6.2.3.2. EEA

6.2.3.3. SUGVS-ILS-216;

6.2.3.4. The Revision number, and

6.2.3.5. The date of issue.

ANNEX B

STATEMENT OF WORK

FOR THE SUPPORT OF THE

SMALL UNMANNED GROUND VEHICLE SYSTEM

Version/Amendment History

Version/Amendment	Date	Notes
Original	July 18 2022	

TABLE OF CONTENTS

1.0 SCOPE

1.1 Purpose

1.1.1 The purpose of this Statement of Work (SOW) is to describe DND's requirements for work to be carried out by the Contractor, including the provision of material and Repair & Overhaul (R&O), in support of the Small Unmanned Ground Vehicle System (SUGVS).

1.1.2 Work will be conducted and completed either in Canada at Canadian Armed Forces (CAF) locations, at operational sites where CAF are deployed, or at the Contractor's plant.

1.2 Concept of Operations & Support

1.2.1 The Concept of Operations provides context necessary to fully understand the SOW.

Aspect	Description
Anticipated service life	10 to 15 years
Annual operating hours	Difficult to predict because of intermittent usage. Continuous operation when in use.
DND Responsibilities for Maintenance	The SUGVS will be maintainable by CAF operators and technicians in a field environment as prescribed for each item of equipment: **Operator Maintenance** – consisting of maintenance that will not require Special Tools and Test Equipment (STTE) to complete, as well as equipment cleaning. Task duration generally less than one (1) hour. **Technician Maintenance, First Line** – consisting of preventive and minor corrective maintenance tasks by repair or replacement of parts, and could require STTE to complete this maintenance. Task duration generally less than four (4) hours. **Technician Maintenance, Second Line** – consisting of corrective maintenance requiring additional tools, specialized personnel, STTE, or controlled environmental conditions. Task duration generally between four (4) and 24 hours.
Contractor Responsibilities for Maintenance	The more in-depth maintenance tasks, consisting of corrective maintenance tasks, reconditioning of assemblies and component rebuilds, will be done through this support contract.
Contractor Training Responsibility	Contractor will provide Operator and Technician training as and when required. Training material is being provided through the Acquisition Contract.

1.3 Land Equipment Management System

1.3.1 The Contractor should be familiar with the Land Equipment Management System (LEMS) that is documented in B-GL-342-001/FP-000, which describes the DND approach to the management of land equipment.

1.4 Contractors Performing R&O

1.4.1 Some of the work performed by the Contractor will be repair and overhaul of equipment. The *Special Instructions Repair and Overhaul Contractors* (A-LM-184-001/JS-001) describes the instructions and procedures governing civilian contractors engaged in the R&O of material on behalf of the DND.

1.5 Acronyms and Abbreviations

AAS	Accountable Advance Spares
AEFC	Army Equipment Fielding Center
AWR	Additional Work Request
CA	Contracting Authority
CAF	Canadian Armed Forces
CER	Combat Engineer Regiment
CDRL	Contract Data Requirements List
CFB	Canadian Forces Base
CFSD	Canadian Forces Supply Depot
CFSME	Canadian Forces School of Military Engineering
CGCS	Canadian Government Cataloguing System
CIS	Contract Issue Spares
CORE	Designates CORE (fixed price basis) requirements
CRPA	Contractor Repair Parts Account
CRCI	Catalogue of Repairable and Consumable Items
CSA	Canadian Standards Association
CSR	Contract Status Report
DGLEPM	Director General Land Equipment Program Management
DID	Data Item Description
DND	Department of National Defence
DRMIS	Defence Resources Management Information System
DSCO	Director Supply Chain Operations
EMT	Equipment Management Team
ESR	Engineer Support Regiment
FSR	Field Service Representative
GFOS	Government Furnished Overhaul Spares
IAW	In Accordance With
ILS	Integrated Logistic Support
IP	Intellectual Property
ITAR	International Traffic in Arms Regulations
LEMS	Land Equipment Maintenance System
MRC	Maximum Repair Cost
NATO	North Atlantic Treaty Organization
NCAGE	NATO Commercial and Government Entity
NSN	NATO Stock Number

NTM	Notice to Move
OEM	Original Equipment Manufacturer
PA	Procurement Authority
PDF	Portable Document Format
PM	Program Management
PSPC	Public Service and Procurement Canada
R&O	Repair and Overhaul
RbR	Repair by Replacement
RCE	Repair Cost Estimate
RGC	Régiment de génie de combat
RMA	Repair Material Account
RSA	Repair Shop Account
SMP	Support Management Plan
SNAPS	Selection Notice and Priority Summary
SOW	Statement of Work
SPTD	Supplementary Provisioning Technical Documentation
STTE	Special Tools and Test Equipment
TA	Technical Authority
TASKING	Designates TASKING (as and when needed) requirements
TAT	Turn-around-time
TDP	Technical Data Package
TDPL	Technical Data Plan & List
TIES	Technical Investigation and Engineering Support
TPM	Technical Problem Management

2.0 APPLICABLE DOCUMENTS

2.1 References

2.1.1 Whereas mentioned, the following Standards must be used for the preparation of deliverables to the extent specified in this SOW:

REFERENCE NUMBER	PROMULGATION DATE	REFERENCE TITLE
A-LM-184-001/JS-001	2019-05-06	SPECIAL INSTRUCTIONS REPAIR AND OVERHAUL CONTRACTORS
SAE ANSI/EIA-649C	2019	CONFIGURATION MANAGEMENT STANDARD
B-GL-342-001/FP-000	2001-09-10	LAND EQUIPMENT MANAGEMENT SYSTEM (LEMS)
C-02-005-009/AM-000	2019-10-31	INSPECTION AND CONDITIONING OF MATERIAL RETURNED TO AND HELD IN THE SUPPLY SYSTEM
D-01-100-214/SF-000	2020-09-30	SPECIFICATION - PREPARATION OF PROVISIONING DOCUMENTATION FOR CANADIAN FORCES EQUIPMENT
D-01-400-001/SG-000	2021-09-30	STANDARD - ENGINEERING DRAWING PRACTICES
D-LM-008-001/SF-001	1983-02-03	METHODS OF PACKAGING
D-LM-008-002/SF-001	1991-08-01	SPECIFICATION FOR MARKING FOR STORAGE AND SHIPMENT
D-LM-008-011/SF-001	1988-11-10	PREPARATION AND USE OF PACKAGING REQUIREMENTS CODES
SOR/2003-289		FEDERAL HALOCARBON REGULATIONS
SOR/2008-273		PCB REGULATIONS
SOR/2014-254		PRODUCTS CONTAINING MERCURY REGULATIONS
SOR/2016-137		OZONE-DEPLETING SUBSTANCES AND HALOCARBON ALTERNATIVES REGULATIONS

2.2 Order of Precedence

2.2.1 In the event of conflict between the content in this SOW and the referenced documents, the content of this SOW will take precedence.

3.0 R&O REQUIREMENTS

3.1 Program Management

3.1.1 General

3.1.1.1 Contractor Test Facilities

3.1.1.1.1 The Contractor must possess or have access to testing facilities required to confirm serviceability of the equipment after repair or upgrade work on the SUGVS or its equipment.

3.1.1.2 Contractor Publication Resources

3.1.1.2.1 The Contractor, or their sub-Contractor, must have office resources necessary to produce electronic manuals, technical drawings, and other logistics and engineering documentation.

3.1.2 Program Meetings

3.1.2.1 Meeting Organization and Coordination

3.1.2.1.1 The Contractor must ensure that the necessary data, personnel and facilities are available for each meeting.

3.1.2.1.2 As appropriate, meetings may be held at the Contractor's or DND facilities at the discretion of the DND EMT.

3.1.2.1.3 The Contractor's Program Manager must be present at all meetings. If the Program Manager does not have final approval authority for decision making and changes, then the person that has that final approval authority must also be present at all meetings.

3.1.2.2 Kick-off Meeting

3.1.2.2.1 The Contractor must hold and chair, along with Canada, a Kick-off Meeting no later than 21 calendar days after contract award, to review and secure a common understanding of the requirements expressed in this contract.

3.1.2.3 Other meetings

3.1.2.3.1 The Contractor and the DND EMT may schedule informal reviews, such as conference calls, webinars (conference calls augmented by simultaneous PowerPoint presentations on the Internet), video conferences, briefings and technical interchange meetings, as required to help achieve the requirements of the contract.

3.1.2.4 Meeting Documentation

3.1.2.4.1 The Contractor must provide Meeting Agendas IAW CDRL SUGVS-PM-001 at Appendix A2.2 (page 24) and its associated DID SUGVS-PM-001 at Appendix A3.3 (page 26).

3.1.2.4.2 The Contractor must record and provide the Meeting Minutes IAW CDRL SUGVS-PM-002 at Appendix A2.2 (page 24) and its associated DID SUGVS-PM-002 at Appendix A3.4 (page 28).

3.1.2.4.3 No change in the interpretation of the program management, SOW, cost, or schedule, as defined in the contract, may be authorized by the minutes of a meeting. Such change must require formal contract amendment by the CA.

3.1.3 Government Property

3.1.3.1 All equipment / spares / parts that may be provided to the Contractor in support of the SUGVS, including those purchased during the contract, must be considered DND-owned, regardless of being held at the Contractor's facility.

3.1.3.1.1 Government-owned and DND-owned must be considered as interchangeable terms.

3.1.3.2 The Contractor must provide suitable protections, such as a separated secure storage facility and insurance, to protect all Government Supplied Materials, including equipment, spares, parts, Technical Data Package (TDP), documentation, software, and Special Tools & Test Equipment.

3.1.4 DND Material Supply Logistics

3.1.4.1 The Contractor must refer to section A4.0 and A-LM-184-001/JS-001, for further requirements for equipment logistics for DND-owned equipment.

3.1.4.2 Supply Accounts for DND-owned Material

3.1.4.2.1 The Contractor will be allocated a Repairable Material Account (RMA). All material (generally prime equipment and Line Replaceable Units that are DND-owned) shipped to the Contractor must be identified in the Defence Resource Management Information System (DRMIS) against the assigned RMA.

3.1.4.3 Contract Issue Spares

3.1.4.3.1 The Contractor must maintain visibility of DND-owned material, classified as Contract Issue Spares (CIS).

3.1.4.3.1.1 To account for these CIS, the Contractor will be allocated a Contractor Repair Parts Account (CRPA) and a Repair Shop Account (RSA).

3.1.4.4 Stock Control and Stock Taking (DND-owned Material)

3.1.4.4.1 The Contractor must perform stock control and stocktaking of DND-owned Contractor held inventory, including:

3.1.4.4.1.1 Institute, maintain and apply a system for inventory accounting, control, storage and handling, preservation, protection and maintenance.

3.1.4.4.1.2 Designate, allocate and prepare a storage area in its facility specifically to accommodate DND-owned stock.

3.1.4.4.1.3 As a risk mitigation measure, in case of a strike or lockout action, ensure that DND has continued access to, and protection of, inventory that it requires in support of operations.

3.1.4.4.1.4 Initiate and complete a one hundred per cent (100%) manual stocktaking (visual confirmation) of RMA, RSA, CRPA (CIS) and all material listed in the Contractor Held Inventory Report, one (1) time each year.

3.1.4.4.1.5 The Contractor must promptly conduct investigations into every discrepancy arising from stocktaking of Contractor managed DND-owned material, and must immediately notify DND of all deficiencies that are discovered.

3.1.5 Hazardous Materials

3.1.5.1 The Contractor must be solely responsible for the handling, transportation and disposal of all waste, and hazardous waste material generated as a result of the work in this SOW.

3.1.6 Environmental Management and Assessment

3.1.6.1 General

3.1.6.1.1 The Contractor must use low-risk chemical products for equipment maintenance and repair where feasible. Low-risk chemical products are defined as those that do not contain substances regulated under the Canadian Environmental Protection Act, 1999 (CEPA) and listed on Schedule 1 of CEPA.

3.1.6.1.2 The Contractor is responsible for ensuring that all work carried out on DND equipment by staff, or duly appointed sub-contractors, is:

3.1.6.1.2.1 Completed using personnel qualified and certified in the scope of work that they are undertaking and,

3.1.6.1.2.2 In compliance with all applicable municipal, territorial, provincial, federal environmental protection statutes and regulations.

3.1.6.1.3 The Contractor must provide (when asked) and ensure the use of up-to-date (no older than three (3) years) Material Safety Data Sheets.

3.1.6.1.4 In accordance with the Federal Halocarbon Regulations (SOR/2003-289) and the Ozone-depleting Substances and Halocarbon Alternatives Regulations (SOR/2016-137), any halocarbons that are incorporated into the equipment, must comply with regulations SOR/2003-289 and SOR/2016-137. If such substances must be used, the Contractor must:

3.1.6.1.4.1 Inform the Technical Authority by identifying the substance(s).

3.1.6.1.4.2 Identify the specific location within the equipment and the quantity.

3.1.6.1.5 In accordance with the Products Containing Mercury Regulations (SOR/2014-254), if mercury is present in any part of the equipment, the mercury content limit must comply with the regulation SOR/2014-254. If such substances must be used, the Contractor must:

3.1.6.1.5.1 Inform the Technical Authority by identifying the substance(s).

3.1.6.1.5.2 Identify the specific location within the equipment and the quantity.

3.1.6.1.6 In accordance with the Polychlorinated Biphenyls (PCBs) Regulations (SOR/2008-273), if PCBs are present in any part of the equipment, they must comply with the regulation. If such substances must be used, the Contractor must:

3.1.6.1.6.1 Inform the Technical Authority by identifying the substance(s).

3.1.6.1.6.2 Identify the specific location within the equipment and the quantity

3.1.6.2 Environmental Management System

3.1.6.2.1 The Contractor must implement and maintain an Environmental Management System which is consistent with the principles presented in ISO 14001. Certification to this standard is preferred but not mandatory.

3.1.6.2.2 The Contractor must have a formalized set of procedures and control measures in place to demonstrate environmental compliance and minimize environmental impact of the work.

3.2 Operating, Training & Engineering Support

3.2.1 General

3.2.1.1 A TASKING request defines the scope / objectives and may be initiated by either Canada or by the Contractor. If initiated by the Contractor, the following information must be provided:

3.2.1.1.1 Estimated duration;

3.2.1.1.2 Reporting frequency and format;

3.2.1.1.3 Level of effort, and

3.2.1.1.4 Estimated cost.

3.2.2 Operators and Technical Personnel

3.2.2.1 In order to provide satisfactory operators and technical personnel (Field Service Representatives & Mobile Repair Parties are possibly the same resources), the Contractor must provide the following:

3.2.2.1.1 Operators and technical personnel that can provide training on the SUGVS.

3.2.2.1.2 Operators and technical personnel that can work extended hours and during holidays.

3.2.2.1.3 Operators and technical personnel that can perform in-depth maintenance on the SUGVS.

3.2.2.1.4 Operators and technical personnel that can mentor and advise CAF operators and technicians in the performance of their tasks using the SUGVS.

3.2.2.1.5 Operators and technical personnel that are knowledgeable of the Contractor's engineering and support organization and able to obtain a quick response to queries regarding technical concerns and material status.

3.2.3 Technical Investigation and Engineering Support

3.2.3.1 The Contractor must provide TIES, when and as requested by DND. Such tasks could include:

3.2.3.1.1 Conducting specialized testing;

3.2.3.1.2 Performing specialist engineering studies, such as human factors, survivability, electromagnetic interference/compatibility, safety and health, reliability and maintainability;

3.2.3.1.3 Providing engineering assessments and recommendations (for example, regarding trends, failures (including repetitive failures), defects, safety hazards, corrosion, and technology insertion);

3.2.3.1.4 Developing alternate or supplementary operating, maintenance, and supply procedures;

3.2.3.1.5 Rationalizing the preventive maintenance requirements in areas where there is a potential for significant improvements in maintenance effectiveness or efficiency;

3.2.3.1.6 Preparing technical bulletins and preparing supporting technical data;

3.2.3.1.7 Developing repair schemes for potential repairs not covered in maintenance manuals;

3.2.3.1.8 Preparing additional publications or amendments to existing publications;

3.2.3.1.9 Translating technical publications into either Canadian official language (English or Canadian French);

3.2.3.1.10 Performing post battle damage assessments, and determine how to return equipment to a serviceable state, or if it can be cannibalized for parts;

3.2.3.1.11 Designing and developing modifications/upgrades/conversions, updating drawings, preparing modification installation instructions and providing modification installation kits;

3.2.3.1.12 Investigating software faults, and viruses, and develop solutions. Update software embedded in the system or its associated equipment;

3.2.3.1.13 Assessing regulatory compliance, especially regarding safety and protection of the environment;

3.2.3.1.14 Obtain CSA/UL or equivalent safety certifications for the equipment that has been modified or repaired through the work under this contract.

3.2.3.2 On completion of the TIES, the Contractor must report its findings to the DND TA within 14 calendar days, or another timeframe agreed to by the DND TA.

3.3 Maintenance Support

3.3.1 General

3.3.1.1 The terms ‘repair’ and ‘overhaul’ are defined as follows:

3.3.1.1.1 Repair - The identification and correction of those specific defects which degrade the performance of an item, causing it to function below its specification or not as described in its operations manual.

3.3.1.1.2 Overhaul - The restoration of an item to its original condition and life expectancy. It includes the replacement of worn, damaged or life expired parts; the incorporation of approved modifications; and the rework of components as necessary.

3.3.1.2 The Contractor must provide Maintenance Support, including Repair and Overhaul (R&O), for the repairable items listed in A1.0 List of Items to be Supported (page 20).

3.3.1.3 The Contractor must perform R&O in accordance with this SOW, A-LM-184-001/JS-001 Special Instructions Repair and Overhaul Contractors, and the Quality Assurance requirements stated in para. 3.3.4, such that the CAF will be provided with functional, safe and reliable SUGVS.

3.3.1.4 The Contractor must use parts and materials as per the most recent or OEM design configuration.

3.3.1.4.1 Changes to the parts, equipment configuration, or design must be approved by the TA, and executed in accordance with the SOW.

3.3.2 Minimum and Forecasted Repairs

3.3.2.1 The minimum number of items that may be processed through the R&O facility may be zero.

3.3.2.2 The Current Year Forecast and Next Year Forecast quantity is dependent upon the quantity in service and operational urgency, and is defined in Appendix A1.0 List of Items to be Supported (page 20).

3.3.2.3 Updates to the Current Year Forecast and Next Year Forecast will be provided through the Selection Notice and Priority Summary (SNAPS) Report as detailed in A-LM-184-001/JS-001.

3.3.3 Extent of R&O Maintenance

3.3.3.1 The Contractor must provide R&O Maintenance support to the extent listed here:

3.3.3.1.1 Materials - All equipment system components must be inspected and repaired as required. Defective components shall be repaired or replaced.

3.3.3.1.2 Mechanical - All mechanical systems must be inspected and repaired as required. Defective components must be repaired or replaced.

3.3.3.1.3 Electrical - All electrical components must be inspected, tested and repaired as required. Defective components must be repaired or replaced.

3.3.3.1.4 Safety - All systems/components affecting the safety of the user/operator or those affecting hazardous operation of the equipment must be inspected and tested for correct operation. Defective components must be replaced. All warning decals, labels, data plates must be clear and legible.

3.3.4 Quality Assurance

3.3.4.1 Quality of R&O Work

3.3.4.1.1 The R&O must be performed in accordance with this SOW and the Quality Assurance requirements stated herein, such that the CAF will be provided with functional, safe and reliable equipment. In the case of differences among these references, this SOW takes precedence.

3.3.4.2 Quality Assurance Representative

3.3.4.2.1 All stages of the R&O procedures will be subject to inspection by a Canadian Government DND Quality Assurance Representative unless DND authorizes otherwise. The representative will monitor for best industrial practices and will have the authority to stop work if poor practices or dangerous conditions are noted and cannot be resolved on-site.

3.3.4.3 Testing and Inspection

3.3.4.3.1 The Contractor must perform testing to confirm serviceability for each piece of repaired/overhauled equipment.

3.3.4.3.2 The Contractor must prepare a test report in the Contractor's format. A copy of the report must be retained by the Contractor and a copy forwarded electronically to the TA.

3.3.4.3.3 The Contractor must visually inspect all completed equipment for security of components and hazardous conditions, and all deficiencies must be noted and repaired.

3.3.5 Repair Turn-Around-Time (TAT)

3.3.5.1 The Contractor must complete repairs **within ninety (90) calendar days from receipt**, unless otherwise indicated in Appendix A1.0 List of Items to be Supported (page 20) or by the DND EMT.

3.3.5.1.1 The repair TAT includes all the time that the item requiring repair is in the custody of the Contractor, from receipt at the handover point to return to the handover point.

3.3.5.2 In the case of a priority repair request, system-level refurbishment, or battle damage repair, the DND EMT will provide a SOW defining the scope of work and new schedule, as a TASKING.

3.3.6 Repair Cost Estimates (RCE)

3.3.6.1 Upon receipt of the Repairable Items indicating an RCE, as shown items in Appendix A1.0 List of Items to be Supported (page 20), the Contactor must provide an RCE including all labour, sub-contracting and shipping, materiel costs and administration fees to the TA for approval before the repair can proceed.

3.3.6.2 If DND provides spare parts to the Contractor, or spare parts are already Contractor Held and Managed, the Contractor must deduct the value of the parts from the RCE of the item for which the parts are intended.

3.3.7 Condemn/Scrapping Considerations

3.3.7.1 If it is decided not to repair the equipment, the DND EMT will provide guidance on scrapping procedures to the Contractor at that time.

3.3.7.2 If the equipment contains embedded software (and possibly data) it may be necessary to erase the stored software and data prior to disposing of the equipment. In such cases, the Contractor must seek direction from the DND EMT.

3.3.7.3 When DND-owned equipment is to be scrapped, the Contractor must take care to comply with all International Traffic in Arms Regulations (ITAR) regarding the disposal method used and record keeping.

3.3.7.3.1 Guidance on disposal is available through assigned Demilitarization Codes.

3.3.8 Software Maintenance

3.3.8.1 The Contractor must perform routine software maintenance including software installation, data load and unload, backup and recovery, release replication and distribution.

3.3.9 Provision of Material (R&O)

3.3.9.1 The Contractor must obtain the parts (repairable and consumable items) required for the R&O Maintenance Support, including locating sources of supply.

3.3.9.2 The Contractor must obtain and make available parts for **'Repair by Replacement'** (RbR) situations, where the repair can be done in the field.

3.3.9.2.1 RbR situations also apply to parts that are required so rarely that they would never be stocked in depot, and the cost is minimal compared to the transport cost of shipping the SUGVS back for R&O Maintenance Support at the Contractor's site.

3.3.9.2.2 RbR parts would be requested on an as and when required basis that will be detailed in a DND 626 Task Authorization.

4.0 CONTRACT DELIVERABLES

4.1 Repaired Material

4.1.1 The Contractor will receive direction from the TA for the final delivery destination of all repaired materiel on an individual basis; however, if not received the default delivery will be to 7 Canadian Forces Supply Depot.

4.1.2 The Contractor must include a properly completed and signed CF942/CF942A Materiel Condition Tag/Label, when applicable, IAW C-02-005-009/AM-000 Inspection and Condition of Materiel Returned to and Held in the Supply System, for all returned items.

4.1.2.1 The CF942/CF942A Tags/Labels are to be directly attached to the materiel returned after repair and overhaul IAW C-02-005-009/AM-000, and will be provided by DND Quality Assurance Representative.

4.2 R&O Service Record and Test Report

4.2.1 The Contractor must provide an R&O Service Record and Test Report with each piece of equipment for shipment, returning from R&O.

4.3 Data Deliverable List

4.3.1 The Contractor must prepare and deliver all data deliverables required under the Contract as summarized in para. 4.4.

Note: ‘LOT’ equates to a varied quantity needed to fulfill the requirements of the CDRL.

4.4 List of Support Requirements & Data Deliverables

Item	Item Description	Initial Submission/ Delivery QTY	Subsequent Submissions / Replenishment
1	Program Management – work performed continuously under a fixed price basis.	As defined in section 3.1 within Annex A	-
2	Meeting Agenda (para 3.1.2.4.1)	1	LOT
3	Meeting Minutes (para 3.1.2.4.2)	1	LOT
4	Operator, Training & Engineering Support – work performed through DND 626 Task Authorization process (as-and-when requested work).	As defined in section 3.2 Within Annex A	-
5	R&O Maintenance Requirements – work performed as a pre-authorized R&O repair	As defined in section 3.3 Within Annex A	-
6	R&O Service Record and Test Report	LOT – with the equipment for shipment	LOT – with the equipment for shipment

A1.0 APPENDIX: LIST OF ITEMS TO BE SUPPORTED

A1.1 Supported Equipment and Spares

A1.1.1 The Contractor must provide support for the equipment and spare items specified in Table 1 in accordance with the SOW. An explanation of each column is detailed below:

A1.1.1.1 System Identifier MRN/OEM Part No – A unique identifier for the Item, as used in the applicable technical manuals or supply management system.

A1.1.1.2 Item Nomenclature – The name of the Item that may include Item class/group categories and functional descriptors.

A1.1.1.3 NATO Stock Number (NSN) – The 13-digit identifier used in NATO and allied cataloguing systems. The NSN will be included if the Item is to be ordered by DND.

A1.1.1.4 Regular or Free-Flow R&O by Item

A1.1.1.4.1 Repair Cost Estimate (RCE) – Identifies that the item will require a cost estimate before repairs or overhaul can begin.

A1.1.1.4.1.1 This is used for regular R&O when equipment is more complex so the TA requires more visibility on what is being proposed, has not yet reached steady-state and is therefore harder to predict typical repair costs/requirements, and repairs occur at a low rate.

A1.1.1.4.2 Maximum Repair Cost (MRC) – Identifies the maximum amount authorized that includes all labour and material costs, to be expended to repair an item. Repairs above the MRC must be approved by DND before any repair or overhaul work commences. Standard Selection Notice Observation Message procedures as detailed in A-LM-184-001/JS-001 must apply.

A1.1.1.4.2.1 This is used for free-flow R&O when equipment repairs are well understood or are less complex, and are used for repairs that occur at a high rate.

A1.1.1.5 Repair Turn-Around-Time (TAT) – Identifies the Repair TAT, if different from the general Repair TAT, as defined in Support SOW, indicating that this item is of greater importance to the operation of the SUGVS and therefore requires a faster turn-around. Repair TAT is indicated in calendar days; if left blank, then general Repair TAT of 90 calendar days is followed.

A1.1.1.6 Current Year & Next Year Forecasts – Identifies the expected quantity, by fiscal year, of repairable equipment that will be passed through the R&O line.

Table 1: Supported Equipment and Spares

Item Identifier MRN/OEM Part No. (1)	Item Nomenclature (2)	NSN (if item can be ordered) (3)	Regular or Free-Flow RCE/MRC (4)	Repair TAT (cal. Days) (5)	Current Year Forecast 22/23 (6)	Next Year Forecast 23/24 (7)
	SUGVS		RCE			

A2.0 APPENDIX: CONTRACT DATA REQUIREMENTS LIST

A2.1 Management and Explanation of the CDRL

A2.1.1 Management of Data Items

A2.1.1.1 The Contractor must review, update and deliver amendments, or confirm the continuing accuracy of data items annotated with a maintenance period, in accordance with the CDRL.

A2.1.1.2 The Contractor must deliver amended, reissued or resubmitted data items to the location(s) and in the format and quantities specified in the CDRL for the initial submission of the data items.

A2.1.2 Explanation of the CDRL

A2.1.2.1 **CDRL Line Number** – This field provides the unique sequential number that identifies each data item within different functional groups (eg, PM-001, SE-101, & ILS-201).

A2.1.2.2 **CDRL Title** – This field identifies the title of the data item.

A2.1.2.3 **SOW Para Ref** – This field shows the paragraph in the SOW where the data item is stipulated. There may be multiple references to the data item in the SOW, but generally only the first (or one) reference is shown in the CDRL.

A2.1.2.4 **Version** – This field identifies the particular delivery of a data item during its lifecycle (ie, draft, final).

A2.1.2.5 **Delivery Schedule** – This field specifies the date(s) and/or events by which the data item is required to be delivered. The date of delivery applies to all delivery locations and quantities unless otherwise specified. Following are some of the abbreviations and symbols used with this column:

A2.1.2.5.1 'KO' means the Kick-Off Meeting date;

A2.1.2.5.2 Numerals indicate the number of Calendar Days, unless specified otherwise;

A2.1.2.5.3 '+' means after the specified date or event; and

A2.1.2.5.4 '-' means before the specified date or event.

A2.1.2.5.5 If a data item is required to be delivered before an event having a duration of greater than one day, delivery date must be calculated from the first day of that event. If a data item is required to be delivered after an event having a duration of greater than one day, the delivery date must be calculated from the last day of that event.

A2.1.2.6 **Quantity** – This field specifies the total number of data items to be delivered to the associated delivery location(s), including the number of hard (H) and soft (S) copies. When both hard and soft copies are requested, the action copy will be indicated in the notes column.

A2.1.2.7 **Addressee** – This field shows the short title of the DND representative to whom the hard and soft copies of the data items must be delivered. The action hard copy of the data item must be delivered to the first nominated location in this field.

A2.1.2.8 **Data Item Description Reference** – This field provides the identification of the DID with which the data item must comply.

A2.1.2.9 **DND Action Period** – This field defines the number of Calendar Days available to the DND to action the data item and respond to the Contractor, if that action requires a response.

A2.1.2.9.1 The period begins upon the date the action copy of the data item is received at the first nominated addressee.

A2.1.2.9.2 The action period applies to all deliveries, including first deliveries, amendments and re-issues. If a data item is delivered earlier than the first delivery date shown in the CDRL, the DND is not obliged to action it until after that date. If the action period states 'by MSR' for a data item delivered prior to a Mandated System Review (MSR), the action period ends when the minutes for that MSR are approved.

A2.1.2.10 **DND Action Required** – This field indicates the purpose for which the data item is being submitted to the DND, which will either be for Review, Approval or Acceptance.

A2.1.2.11 **Maintenance** – This field specifies either the timings or the time intervals, after each delivery, at which the data item must be reviewed by the Contractor and either have its continuing accuracy status confirmed in writing, or be updated and reissued. The Maintenance column does not apply to draft or preliminary versions of data items. The following abbreviations and codes are applicable to this column:

A2.1.2.11.1 xM – every x calendar months;

A2.1.2.11.2 R – to enable it to be considered at each MSR set out in the System Engineering program;

A2.1.2.11.3 SA – to enable it to be provided for the purposes of conducting Acceptance of each System;

A2.1.2.11.4 FA – to enable it to be provided for the purposes of Final Acceptance; and

A2.1.2.11.5 NA or blank – not applicable.

A2.1.2.12 Notes: Where necessary, additional explanatory information relating to a CDRL data item is provided in this column.

A2.2 CDRL Item List

CDRL #	CDRL Title	SOW Para Ref	Version	Delivery Schedule	Qty	Addressee	DID # and Ref	DND Action Period	DND Action Required	Maint	Notes
SUGVS-PM-001	Meeting Agenda	Para. 3.1.2.4.1 (pg. 10)	Draft	Meeting Date - 7	1S	CA, TA, PA	SUGVS-PM-001	5	Review		
			Revised	Meeting Date - 1	1S	CA, TA, PA	App. A3.3 (pg. 26)				
			Final	Meeting Date	1H	CA, TA, PA		7	Review or Acceptance		
SUGVS-PM-002	Meeting Minutes	Para. 3.1.2.4.2 (pg. 11)	Draft	Meeting Date + 7	1S	CA, TA, PA	SUGVS-PM-002	7	Review		
			Revised or Final	DND Comments + 7	1S	CA, TA, PA	App. A3.4 (pg. 28)	7	Review or Acceptance		

A3.0 APPENDIX: DATA ITEM DESCRIPTION

A3.1 Data Deliverable Format

A3.1.1 **Unless otherwise specified as a specific requirement, the Contractor must deliver all of the soft copies of data deliverables, in formats compatible with the office software currently in use by the DND as listed:**

A3.1.1.1 Microsoft (MS) Windows 10 Enterprise Operating System (OS);

A3.1.1.2 MS Edge 2019;

A3.1.1.3 MS Office Professional Plus 2013 (Word, Excel, Access, PowerPoint and Outlook); and

A3.1.1.4 Foxit PhantomPDF version 10;

A3.2 DID Table Definitions

The following section defines the various blocks of information found on the Data Item Description (DID) forms:

BLOCK 1 – TITLE
The title of the data item for the DID.

BLOCK 2 - IDENTIFICATION NUMBER
The Data Item Description (DID) number, consisting of a sequential three-digit number and prefixed with an abbreviation code, to uniquely identify the DID. Note that the 001-099 series is reserved to Program Management (PM) DIDs, the 101-199 series is reserved to Systems Engineering (SE) DIDs and the 201-299 series is reserved to Integrated Logistics Support (ILS) DIDs. The abbreviation codes used for the prefix are:

"PM" for Program Management
"SE" for Systems Engineering
"ILS" for Integrated Logistics Support

BLOCK 3 - DESCRIPTION
Provides a general description of the data content requirements.

BLOCK 4 – RELATED DOCUMENT(S)
Provides a listing of the related documents and specifications associated with and required to produce this DID.

BLOCK 5 - CONTRACT REFERENCE
The specific paragraph numbers from the Contract Statement of Work and CDRL to assist in identifying the work effort associated with the data item.

BLOCK 6 - PREPARATION INSTRUCTIONS
Provides the preparation instructions for the content and format requirements for the DID.

A3.3 **DID – Meeting Agenda**

DATA ITEM DESCRIPTION	
1. TITLE **Meeting Agenda**	2. IDENTIFICATION NUMBER **DID SUGVS-PM-001**
3. DESCRIPTION The Meeting Agenda contains the venue information and identifies the discussion items to be covered at meetings.	
4. RELATED DOCUMENTS	5. CONTRACT REFERENCE **SOW**: **Para. 3.1.2.4.1 (pg. 10)** **CDRL**: **App. A2.2 (pg. 24)**

6. PREPARATION INSTRUCTIONS

6.1. **CONTENT**

6.1.1. The Meeting Agenda must set forth the venue, identify all requirements and list the discussion items to be covered at the meeting.

6.1.2. Venue. The Meeting Agenda must address the venue as follows:

6.1.2.1. Meeting Identification Number;

6.1.2.2. Purpose;

6.1.2.3. Date, time and location; and

6.1.2.4. Attendees.

6.1.3. Discussion items. The Meeting Agenda must address the discussion items through the following sections:

6.1.3.1. Opening Remarks;

6.1.3.2. Agenda Review;

6.1.3.3. Review of Previous Minutes;

6.1.3.4. Opened Discussion Items;

6.1.3.5. New Discussion Items;

6.1.3.6. Review of Action Items;

6.1.3.7. Next Venue; and

6.1.3.8. Closing Remarks.

6.2. **HARD COPY FORMAT**

6.2.1. The Meeting Agenda must be printed on paper with these characteristics:

6.2.1.1. Weight of no less than 90 gsm;

6.2.1.2. Brightness of no less than 96 ISO brightness;

6.3. **SOFT COPY FORMAT**

6.3.1. The Meeting Agenda must be submitted as a PDF file type.

6.3.2. The Meeting Agenda PDF must be submitted via email (submission size not to exceed 7MB) as follows:

6.3.2.1. To Field: As per the related CDRL section 9.A. Addressee, as identified in the contract.

6.3.2.2. Subject Field: SUGVS-PM-001 – Meeting Agenda – [Rev #] – [Date of Issue]

A3.4 DID – Meeting Minutes

DATA ITEM DESCRIPTION	
1. TITLE **Meeting Minutes**	2. IDENTIFICATION NUMBER **DID SUGVS-PM-002**
3. DESCRIPTION The Meeting Minutes contains the detailed records of proceedings, discussions, decisions and action items from meetings.	
4. RELATED DOCUMENTS	5. CONTRACT REFERENCE **SOW**: **Para. 3.1.2.4.2 (pg. 11)** **CDRL**: **App. A2.2 (pg. 24)**

6. PREPARATION INSTRUCTIONS

6.1. **CONTENT**

6.1.1. The Meeting Minutes must contain the detailed records of proceedings, discussions, decisions and action items from the meeting and be presented through the following sections:

6.1.1.1. General – consisting of meeting identification number, purpose, date, time and location;

6.1.1.2. Attendees, consisting of the organization each person represents, and the identification of the Chairperson(s);

6.1.1.3. Opening Remarks;

6.1.1.4. **Action Item Report** - used to monitor issues, assign responsibility, direct action and track status, history, and progress, and must consisting of:

6.1.1.4.1. Item #; date initiated; required action; assigned actionee; target completion date; cross-reference to all related action items.

6.1.1.4.2. Action Item Report must be **updated** with each meeting and must consisting of:

6.1.1.4.2.1. Action Item current status and the actual date completed;

6.1.1.5. Next Venue;

6.1.1.6. Closing Remarks;

6.2. **SOFT COPY FORMAT**

6.2.1. The Meeting Minutes must be submitted as a PDF file type.

6.2.2. The Meeting Minutes PDF must be submitted via email (submission size not to exceed 7MB) as follows:

6.2.2.1. To Field: As per the related CDRL section 9.A. Addressee, as identified in the contract.

6.2.2.2. Subject Field: SUGVS-PM-002 – Meeting Minutes – [Rev #] – [Date of Issue]

A4.0 LOGISTICS FOR REPAIR AND OVERHAUL CONTRACTS

A4.1 GENERAL INTRODUCTION

A4.1.1 Aim

A4.1.1.1 This Logistic Statement of Work (LOG SOW) is distributed on the authority of the Assistant Deputy Minister (Material) (ADM (Mat)). It will be distributed, as required, internally to ADM (Mat) staff engaged in creating Repair and Overhaul (R&O) Contracts and Procurement Instruments (PI) and those who manage Repair and Overhaul Contracts.

A4.1.1.2 This is a common LOG SOW which will entail contract conditions for Repair and Overhaul contracts for:

A4.1.1.2.1 **In and Out of country:** For step by step instruction on in and out of country repair process refer to Annex B in the A-LM-184-001/JS-001. This model will describe the roles and responsibilities in the end to end repair process.

A4.1.1.2.2 **Major Equipment:** For complete instructions on receipt of Major Equipment, refer to Chapter 2 in the A-LM-184-001/JS-001.

A4.1.1.2.3 **Accountable Advance Spares** For complete instruction on AAS, refer to Chapter 8.2.7 in the A-LM-184-001/JS-001.

A4.1.1.3 This LOG SOW is to be read in conjunction with the A-LM-184-001/JS-001 for additional information. It is to be noted that there are Chapters that are mandatory when using the LOGSOW and must not be removed from the LOGSOW, if the contractor is managing Government Owned Materiel.

A4.1.1.4 It is to be noted that the LOG SOW is to be used primarily as a guide for R&O contracts. It is paramount that this LOG SOW be utilized with minimal changes for reasons of procurement standardization and departmental accountability. However, changes are permissible where there is a need to clarify specific requirements that would apply to equipment/weapon systems undergoing procurement and contract action.

A4.1.1.5 The following Chapters will be identified as mandatory or as applicable.

A4.1.1.6 It is important to understand the system of record (DRMIS) being used in DND and the various account structures in place. Contractors requiring access to DRMIS must obtain a PKI (Public Key Infrastructure) card in accordance with the recently implemented Two-Factor Authentication. All of this information is located in Chapter 1.1 of the A-LM-184-001/JS-001.

A4.1.2 EXTENT OF WORK/TYPES OF EQUIPMENT (Mandatory)

A4.1.2.1 Refer to Chapter 1.2 of A-LM-184-001/JS-001 for further information on the different types of DND Equipment that are authorized for repair and the category types.

A4.2 RECEIPT (Mandatory)

A4.2.1 Refer to Ch. 2.0 of the A-LM 184 for complete instruction on how to process receipts.

A4.2.2 **DISCREPANCIES IN SHIPMENTS (Mandatory)**

A4.2.2.1 The Contractor must action discrepancies in shipments in accordance with Chapter 2.1 of A-LM-184-001/JS-001.

A4.3 WORK CONTROL (Mandatory)

A4.3.1 The Contractor must ensure that the repair of all DND equipment is controlled by a serial numbered work order IAW Chap 3 of A-LM-184-001/JS-001.

A4.3.2 **COMPLETION OF WORK (Mandatory)**

A4.3.2.1 Refer to Chapter 3.1 of A-LM-184-001/JS-001.

A4.3.3 **STOP REPAIR ACTION (Mandatory)**

A4.3.3.1 The Contractor must comply immediately with all stop repair instructions. Detailed procedures are contained in Chapter 3.2 of A-LM-184-001/JS-001.

A4.4 ANNUAL REPAIR FORECAST – SNAPS (As applicable on an exceptional basis)

A4.4.1 Refer to Chapter 4 of the A-LM-184-001/JS-001 for more information.

A4.5 COST CONTROL (Mandatory)

A4.5.1 Refer to Chapter 5.0 of the A-LM-184-001/JS-001 for more information.

A4.6 COSTING RECORDS (Mandatory)

A4.6.1 The Contractor must prepare forms and maintain records IAW Chapter 6.0 of the A-LM-184-001/JS-001.

A4.6.2 **INVOICE/CLAIMS FOR PAYMENT (AAS SPARES) (As applicable)**

A4.6.2.1 The Contractor must submit monthly invoices for AA spare parts, IAW Chapter 6.1 of the A-LM-184-001/JS-001.

A4.7 MAINTENANCE SUPPORT-MINOR REPAIRS (Mandatory)

A4.7.1 Refer to Chapter 7.0 of the A-LM-184-001/JS-001 for more information.

A4.7.2 **MOBILE REPAIR PARTIES (MRPs) (As Applicable)**

A4.7.2.1 Refer to Chapter 7.1 of the A-LM-184-001/JS-001 for more information.

A4.7.3 **EQUIPMENT TURN AROUND TIME (TAT) (Mandatory)**

A4.7.3.1 Refer to Chapter 7.2 of the A-LM-184-001/JS-001 for more information.

A4.7.4 **PRIORITY REPAIR REQUEST (PRR) (Mandatory)**

A4.7.4.1 Refer to Chapter 7.3 of the A-LM-184-001/JS-001 for more information.

A4.7.5 **SPECIAL INVESTIGATIONS & TECHNICAL STUDIES (SITs) (As applicable)**

A4.7.5.1 Refer to Chapter 7.4 of the A-LM-184-001/JS-001 for more information.

A4.7.6 **TECHNICAL INVESTIGATIONS & ENGINEERING STUDIES (TIES) (As Applicable)**

A4.7.6.1 Refer to Chapter 7.5 of the A-LM-184-001/JS-001 for more information.

A4.7.7 **TERMINATION OF CONTRACT (Mandatory)**

A4.7.7.1 Refer to Chapter 7.6 of A-LM-184-001/JS-001.

A4.8 SUPPLY SUPPORT/SUSTAINMENT SUPPORT (Mandatory)

A4.8.1 **TRANSACTION DOCUMENTATION (Mandatory)**

A4.8.1.1 Refer to Chapter 8.1 of A-LM-184-001/JS-001 for more information.

A4.8.2 **CONTRACTOR SUPPLY ACCOUNTING (Mandatory)**

A4.8.2.1 Refer to Ch. 8.2 of A-LM-184-001/JS-001 for explanation of CRPA/CIS.

A4.8.2.2 CONTRACTOR ISSUE SPARES (CIS) MATERIEL RECEIVED OFF CONTRACT/PROCUREMENT (As Applicable)

A4.8.2.2.1 Refer to Chapter 8.2.3 of A-LM-184-001/JS-001 for more information.

A4.8.2.3 SHORTAGE OF CONTRACT ISSUE SPARES (CIS) (As Applicable)

A4.8.2.3.1 Refer to Section 8.2.4 of A-LM-184-001/JS-001 for more information.

A4.8.2.4 ORDERING/RECEIVING CATALOGUED CIS IN DRMIS (As Applicable)

A4.8.2.4.1 Refer to Section 8.2.5 of A-LM-184-001/JS-001 for more information.

A4.8.2.5 GOVERNMENT FURNISHED OVERHAUL SPARES (GFOS) (As Applicable)

A4.8.2.5.1 Refer to Section 8.2.6 of A-LM-184-001/JS-001 for further explanation and detail.

A4.8.2.6 ACCOUNTABLE ADVANCE SPARES (AAS) (As Applicable)

A4.8.2.6.1 Refer to Section 8.2.7 of A-LM-184-001/JS-001 for further explanation and detail.

A4.8.3 **MANAGEMENT OF DND-OWNED SPARES (As Applicable)**

A4.8.3.1 Refer to Chapter 8.3.1 of A-LM-184-001/JS-001 for more information.

A4.8.4 **SPARES REVIEW (As applicable)**

A4.8.4.1 Refer to Chapter 8.4 of A-LM-184-001/JS-001 for more information.

A4.8.4.2 LOAN OF GOVERNMENT FURNISHED INFORMATION/ GOVERNMENT FURNISHED EQUIPMENT (GFI/GFE) (As Applicable)

A4.8.4.2.1 Refer to Section 8.4.1 of A-LM-184-001/JS-001 for further explanation and detail.

A4.8.5 **STOCKTAKING (Mandatory)**

A4.8.5.1 Refer to Section 8.5 of A-LM-184-001/JS-001 for further explanation and detail.

A4.8.6 **SELECTION NOTICE OBSERVATION MESSAGE (SNOM) (Mandatory)**

A4.8.6.1 Refer to Chapter 8.6 of A-LM-184-001/JS-001.

A4.8.7 **EMBODIMENT FEES (As Applicable)**

A4.8.7.1 Refer to section 8.7 of A-LM-184-001/JS-001 for further explanation and detail.

A4.8.8 **LOSS OR DAMAGE TO DND MATERIEL (Mandatory)**

A4.8.8.1 Refer to section 8.8 of A-LM-184-001/JS-001 for further explanation and detail.

A4.8.9 **SCRAP - CUSTODY & DISPOSAL (Mandatory)**

A4.8.9.1 Refer to section 8.9 of A-LM-184-001/JS-001 for further explanation and detail.

A4.8.10 **PACKAGING (Mandatory)**

A4.8.10.1 Refer to section 8.10 of A-LM-184-001/JS-001 for further explanation and detail.

A4.8.11 **REUSABLE CONTAINER (As Applicable)**

A4.8.11.1 Refer to Chapter 8.11 of the A-LM-184-001/JS-001 for more information.

A4.8.12 **TRANSPORTATION/SHIPMENT IDENTIFICATION/MODE OF SHIPMENT/LOSS OR DAMAGE IN TRANSIT/ GENERAL CLAIMS PROCEDURES (Mandatory)**

A4.8.12.1 Refer to Chapter 8.12 of the A-LM-184-001/JS-001 for more information.

A4.9 WARRANTY CONSIDERATION (Mandatory)

A4.9.1 Refer to Chapter 9.0 of the A-LM-184-001/JS-001 for more information.

A4.10 CONTRACTOR USE OF DND EQUIPMENT/PUBLICATIONS (As Applicable)

A4.10.1 Refer to Chapter 10.0 of the A-LM-184-001/JS-001 for more information.

A4.11 PUBLICATIONS (As Applicable)

A4.11.1 Refer to Chapter 11 of A-LM-184-001/JS-001 for more information.

A4.12 OFFICE SERVICES (As Applicable)

A4.12.1 Refer to Ch. 12 of A-LM-184-001/JS-001 for further explanation.

A4.13 MINUTES OF MEETINGS (Mandatory)

A4.13.1 Refer to Ch. 13 of A-LM-184-001/JS-001 for further explanation.

A4.14 PLANT SHUTDOWN/VACATION PERIOD (Mandatory)

A4.14.1 Refer to Ch. 14 of A-LM-184-001/JS-001 for further explanation.

A4.15 REPORTS (Mandatory)

A4.15.1 Refer to Ch. 15 of A-LM-184-001/JS-001 for a complete list of reports available to contractors.

ANNEX C

FINANCIAL COSTING

SMALL UNMANNED GROUND VEHICLE SYSTEM

PART ONE ACQUISITION FINANCIAL COSTING TABLE

MANDATORY COMPLETION OF EACH PRICE "BOX". IF THERE IS NO COST PLEASE INSERT "0" or Nil.

Item #	Item Description	Qty	Unit price	Total price
1	SUGVS (para. A1.0)	59		
2	Contract Master Schedule (para. 3.2.1)	1		
3	Contract Status Report (para. 3.3.1)	LOT		
4	Kick-off Meeting (para. 3.4.2)	1		
	Meeting Agenda (para. 3.4.5.1.1)			
	Meeting Minutes (para. 3.4.5.1.2)			
5	ILS Meeting (para. 3.4.3)	1		
	Meeting Agenda (para. 3.4.5.1.1)			
	Meeting Minutes (para. 3.4.5.1.2)			
6	Application for Spectrum Supportability (para. 4.3.2)	1		
7A	Operator Manual - English (para. 4.4.1.1.1)	LOT		
7B	Operator Manual - Bilingual (para. 4.4.1.1.1)			
8A	Operator Quick Reference Card - English (para. 4.4.1.2.1)	LOT		
8B	Operator Quick Reference Card - Bilingual (para. 4.4.1.2.1)			
9A	Repair Manual - English (para. 4.4.1.3.1)	LOT		
9B	Repair Manual - Bilingual (para. 4.4.1.3.1)			
10	Illustrated Parts Manual (para. 4.4.1.4.1)	1		
11A	Operator Training Package - English (para. 4.4.1.3.1)	LOT		
11B	Operator Training Package - Bilingual (para. 4.4.1.3.1)			
12A	Technician Training Package - English (para. 4.4.1.6.1)	LOT		
12B	Technician Training Package - Bilingual (para. 4.4.1.6.1)			
13A	Preservation, Storage and Reactivation Instructions - English (para. 4.4.1.7.1)	1		
13B	Preservation, Storage and Reactivation Instructions - Bilingual (para. 4.4.1.7.1)			
14	Provisioning Parts Breakdown (para. 4.5.3.1.1)	1		
15	Supplementary Provisioning Technical Documentation (para. 4.5.3.2.1)	1		
16	Material Identification Data Set (para. 4.5.3.3.1)	1		
17	Initial Provisioning Conference (para. 4.6.1)	1		
	Meeting Agenda (para. 3.4.5.1.1)			
	Meeting Minutes (para. 3.4.5.1.2)			
18	Identification Plates (para. 4.7.1)	LOT		

19	Controlled & Non-Controlled Goods List (para. 4.8.1)		1		
20	Identification Labels for Storage & Shipment and Packaging Codes (para. 4.9.3)		1		
21	List of Items to be Supported (para. 4.10.1)		1		
22A	Operator Training Session (para. 4.11.2)	Training Location:			
		CFB Edmonton	1		
22B		CFB Petawawa	1		
22C		CFB Gagetown	2		
22D		CFB Valcartier	1		
22E		Navy (TBD)	1		
22F		Air Force (TBD)	1		
23A	Technician Training Session (para. 4.11.2)	Training Location:			
		CFB Edmonton	1		
23B		CFB Petawawa	1		
23C		CFB Gagetown	2		
23D		CFB Valcartier	1		
23E		Navy (TBD)	1		
23F		Air Force (TBD)	1		
24	Equipment Environmental Assessment (para. 5.4.1)		1		
				Subtotal	$ -
Please indicate to which lines items GST/HST is applied, if not to all				**GST/HST**	$ -
				Total	$ -
Note 1:	'LOT' equates to a varied quantity needed to fulfill the requirements of the CDRL.				

Optional Requirements:

Item #	Item Description	Qty	Unit price	Total price
25	SUGVS (para. A1.0), **up to 12 additional units**, including Operator Manual, Repair Manual, and Operator Quick Reference Card	12	$ -	$ -
26	Spare Parts for two (2) years of usage - assume 150 hours of use over the two years, and user maintenance follows the Maintenance Concept para. 4.1, supported by Contractor R&O which should not be costed here.	-	-	$ -

PART TWO IN-SERVICE SUPPORT FINANCIAL COSTING TABLE

Bidders' Instructions

Note 1	Based on the requirements in Annex B Support SOW and the information provided in the tables below for the various activity scenarios, **Bidders must fill in firm years only, and the other white cells in the tables below.**
Note 2	Bidders must list all labour categories that may be required to completed the work. Other* Labour Categories that are not already listed may be added. The bidder must clearly describe which labour category they are proposing.
Note 3	Work Load % is an estimate and will only be used for costing purposes, these hours do not represent any intended or potential final contract value.
Note 4	Option Years would be negotiated at the time in a future contract.

Table One - Labour Categories - In-Service Support

Bidders must provide labour rates for the labour categories that it considers necessary to complete the work. Those categories not used can be left blank, or if required, additional labour categories can be added.

These rates will be used to calculate prices for the various tasks and activities directed or approved by DND, under the Support SOW, and used as fixed annual values in the Support Contract.

Labour Categories will be grouped into Administrative and Technical, and used in Table Two.

Labour Category	Bid Currency used		Firm Years (Hourly Rate)			Option Years (Hourly Rate) (to be negotiated - Note 4)						
			YEAR 1	YEAR 2	YEAR 3	YEAR 4	YEAR 5	YEAR 6	YEAR 7	YEAR 8	YEAR 9	YEAR 10
Project Manager		Hourly Rate/ Labour Category →										
Administration												
Engineer												
Technician												
Technologist												
Logistician												
Draftsperson/Illustrator												
Other*												
Other*												
Other*												

Table Two - ANNEX B - SUPPORT SOW - 3.0 R&O Activities (Pre-Authorized R&O)

Repair & Overhaul Activities	Details	Labour Category Group Estimated Workload			Firm Years (Workload x Avg. Rate x Percentage)			Option Years (Workload x Avg. Rate x Percentage) (to be negotiated - Note 4)						
		Labour Category Group	Average Hourly Rate	Workload percentage	YEAR 1	YEAR 2	YEAR 3	YEAR 4	YEAR 5	YEAR 6	YEAR 7	YEAR 8	YEAR 9	YEAR 10
R&O hourly work	*In the cell provided, Bidders must indicate what labour categories were used from each labour category group (Administrative and Techincal), as per Table One. **As the bidder is requested to propose their own labour categories as per Table One, only the average hourly rates for Administrative and Technical will be calculated and used for costing purposes. Bidders are requested to provide only one hourly rate per Labour Category Group. Example: If the bidder inputs Project Manager ($10.00/h) and Administration ($20.00/h) under the Labour Gategory Group Administrative, Project Manager plus Administration equals $30.00/h divided in 2, gives an average hourly rate of $15.00/h. For the R&O hourly work described in the Support SOW, the following is the overall estimated workload per year: Year 1 – Estimated Workload to be 200 hours Year 2 – Estimated Workload to be 200 hours Year 3 – Estimated Workload to be 200 hours	**Administrative** (Must Indicate what categories were used - Example - Project Manager, Administration, Other, etc.)		30% of overall hours										
		Technical (Must Indicate what categories were used - Example - Engineer, Technician, Other, etc.)		70% of overall hours										
		Mark-up/Overhead rate			%	%	%	%	%	%	%	%	%	%

		Sub-Total Cost →	$ -	$ -	$ -	$ -	$ -	$ -	$ -	$ -	$ -	$ -

Table Three - R&O Spares Provisioning

Repair & Overhaul Activities	Details		Firm Years (OEM Spares with Mark-up)			Option Years (OEM Spares with Mark-up) (to be negotiated - Note 4)						
			YEAR 1	YEAR 2	YEAR 3	YEAR 4	YEAR 5	YEAR 6	YEAR 7	YEAR 8	YEAR 9	YEAR 10
R&O Spares Provisioning	For R&O spares provisioning described in the Support SOW, the following is the overall estimated OEM spares required per year. Provide the cost of these spares to Canada, specifically including the Contractor's price markup (if any) on the OEM spares. Price of Spares are for evaluation purposes only and does not represent any intended or potential final price of spares. Example: if the Mark up is 5% the sub-total Cost would be Spares x 1.05 = $21,000		$100,000	$100,000	$100,000							
		Mark-Up, Parts Procurement (%)	%	%	%	%	%	%	%	%	%	%
		Sub-Total Cost →	$ -	$ -	$ -	$ -	$ -	$ -	$ -	$ -	$ -	$ -

SUPPORT SOW R&O Activities - Subtotal	$ -	$ -	$ -	$ -	$ -	$ -	$ -	$ -	$ -	$ -	$ -
GST/HST											
Total Annual Value	$ -	$ -	$ -	$ -	$ -	$ -	$ -	$ -	$ -	$ -	$ -
TOTAL FOR ALL FIRM YEARS OF IN-SERVICE SUPPORT (Table 2 +3)	$ -										