NOTES
1.) Banner to be sewn from 18oz. white reinforced exterior grade vinyl.
2.) Banner will be used for five annual installation periods in an outdoor environment. All fabrication methods and materials used must be durable for this anticipated service life.
3). Artwork to be provided in Adobe Illustrator format
4.) Do not scale drawing

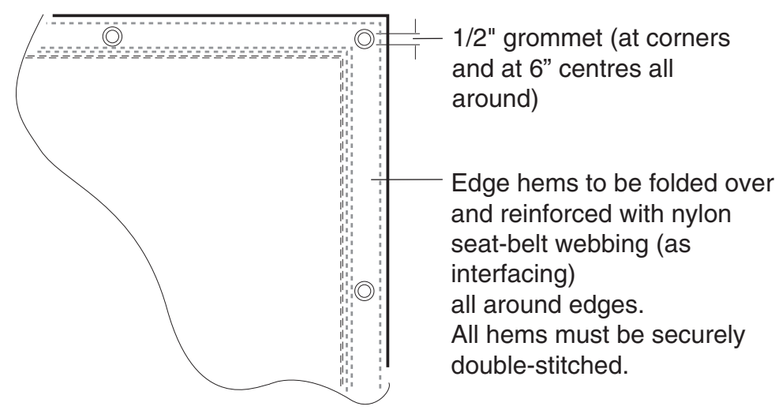

DETAIL A

NCC CCN Canada	**Title:** RCS - Capitale Banner	**NCC Contact:** Richard Palmer	
	Project: RCS Entrances & Signage	**Email:** rpalmer@ncc-ccn.ca	**Scale:** N/A
	Date: December 27, 2012	**Tel:** (613) 239-5272	**Page:** 1 of 1