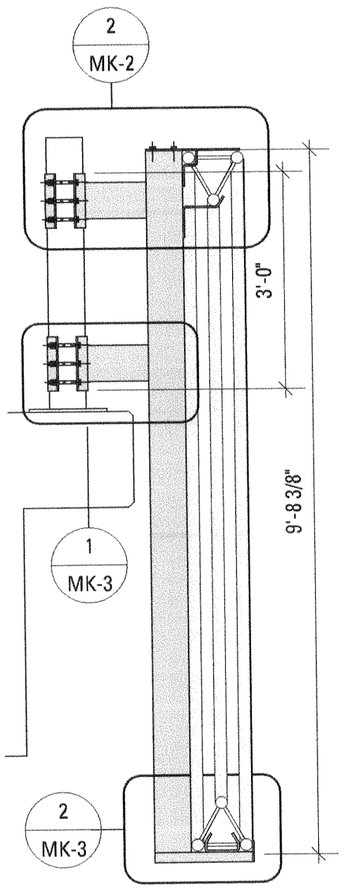

1 / MK-1 Vertical Section
Scale: 1:25

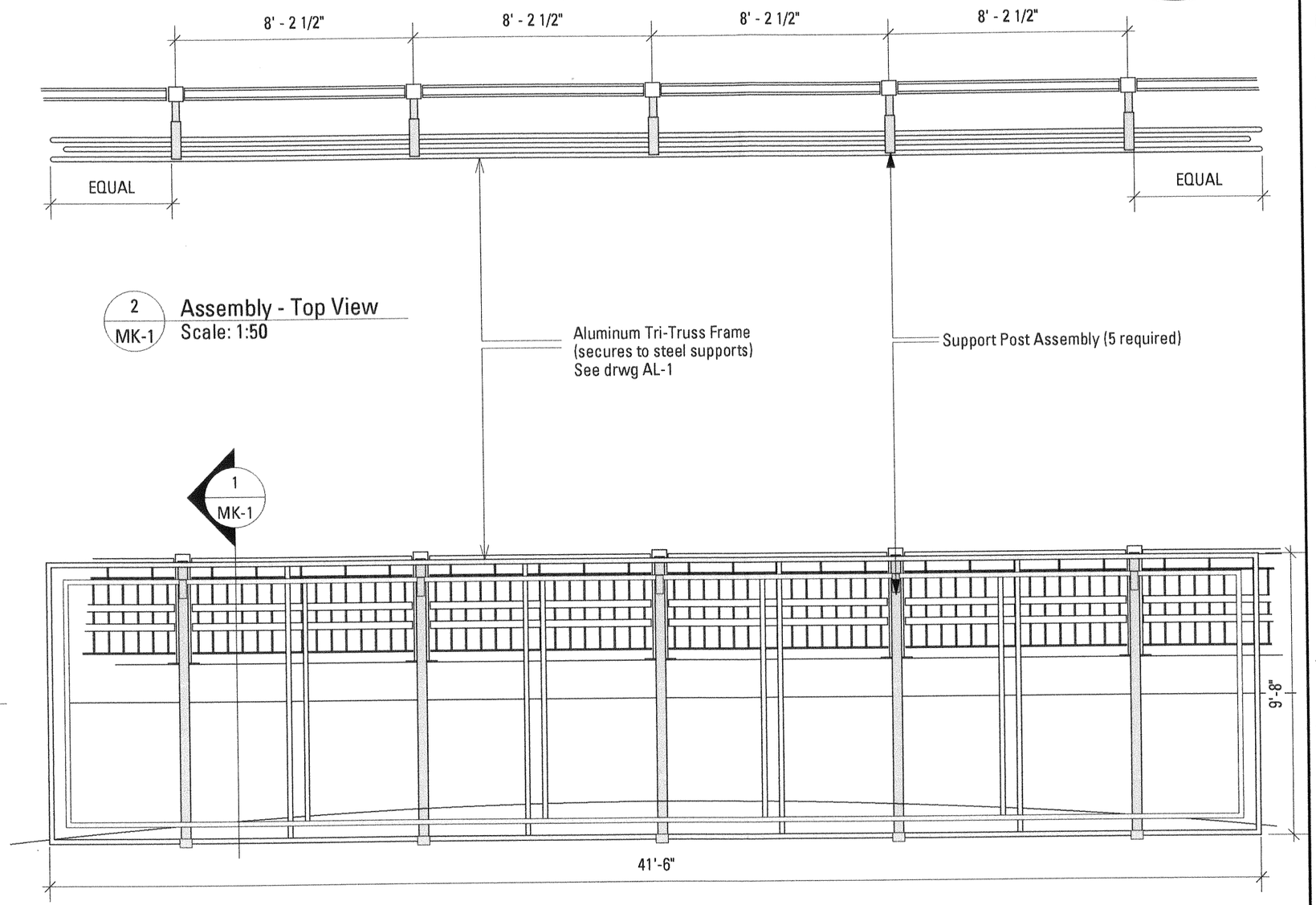

2 / MK-1 Assembly - Top View
Scale: 1:50

3 / MK-1 Assembly - Front View
Scale: 1:50

REGISTERED PROFESSIONAL ENGINEER
4/12/02
A.S.WILKINS
PROVINCE OF ONTARIO

INTU DESIGN LTD.
499 BLAIR STREET
OTTAWA ONTARIO
CANADA K1G 0J3

T: 613 523 8359
F: 613 248 4651
E: stewart@intu-design.com
www.intu-design.com

Notes

- All welds shall be fillet type, having a minimum size of 6mm and placed continuously and completely around all connections. Spot welding is not permitted. Welding should be carried out in accordance with CSA W59-M1989 (using E480XX electrodes).
- The steel components shall be provided and meet the requirements of CAN/CSA-G40.20/G40.21-M92, Structural Quality Steels. The grade of the steel shall be 350W.
- All bolts to be either stainless steel or galvanized steel, conforming to the strength requirements of ASTM A325.
- Contractor to verify fit between aluminum frame and steel posts. Contractor to verify fit of brackets on bridge railing posts.
- Fabricator to provide shop drawings for review prior to fabrication.
- All steel components to be primed and painted semi-gloss black.
- All aluminum components to be mill-finish with no coatings applied.
- Assembly to be installed centred over Canal.

1 COMPLETE ASSEMBLY REQUIRED

detail no.
sheet no.

designed by: Stewart Bailey

drawn by: Stewart Bailey

Rideau Canal Skateway

title: **Bridge Banner Support**

drawing: **Mackenzie King Bridge Assembly**

scale: **As Noted**

date: **12/3/02**

drawing no. **MK-1**

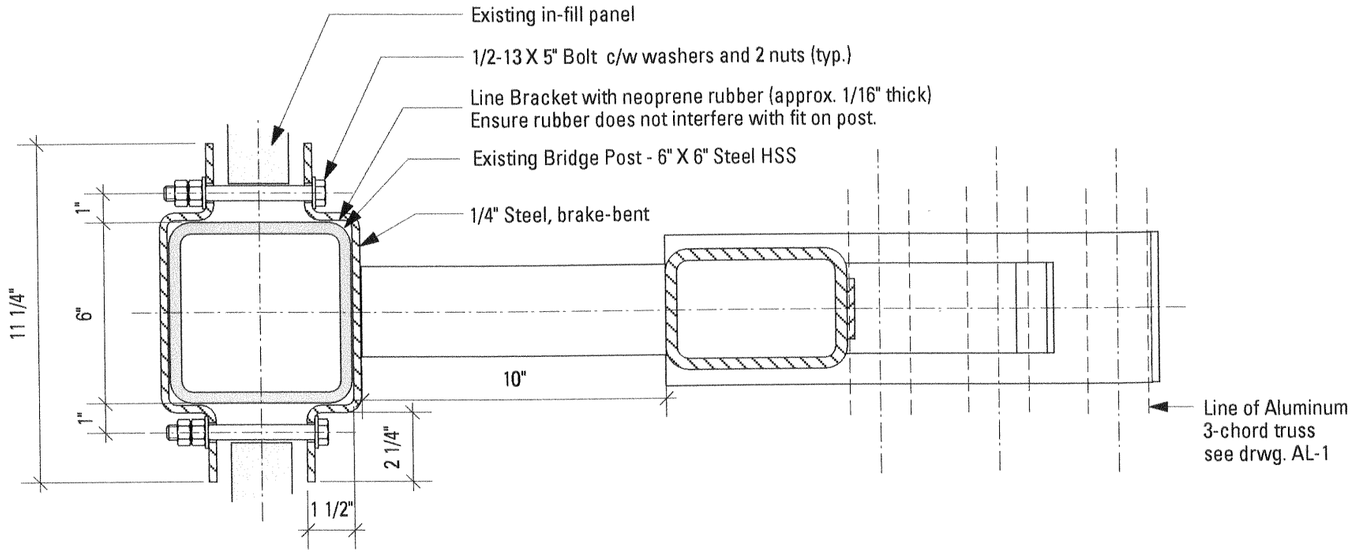

1 / MK-2 Horizontal Section
Scale: 1:5

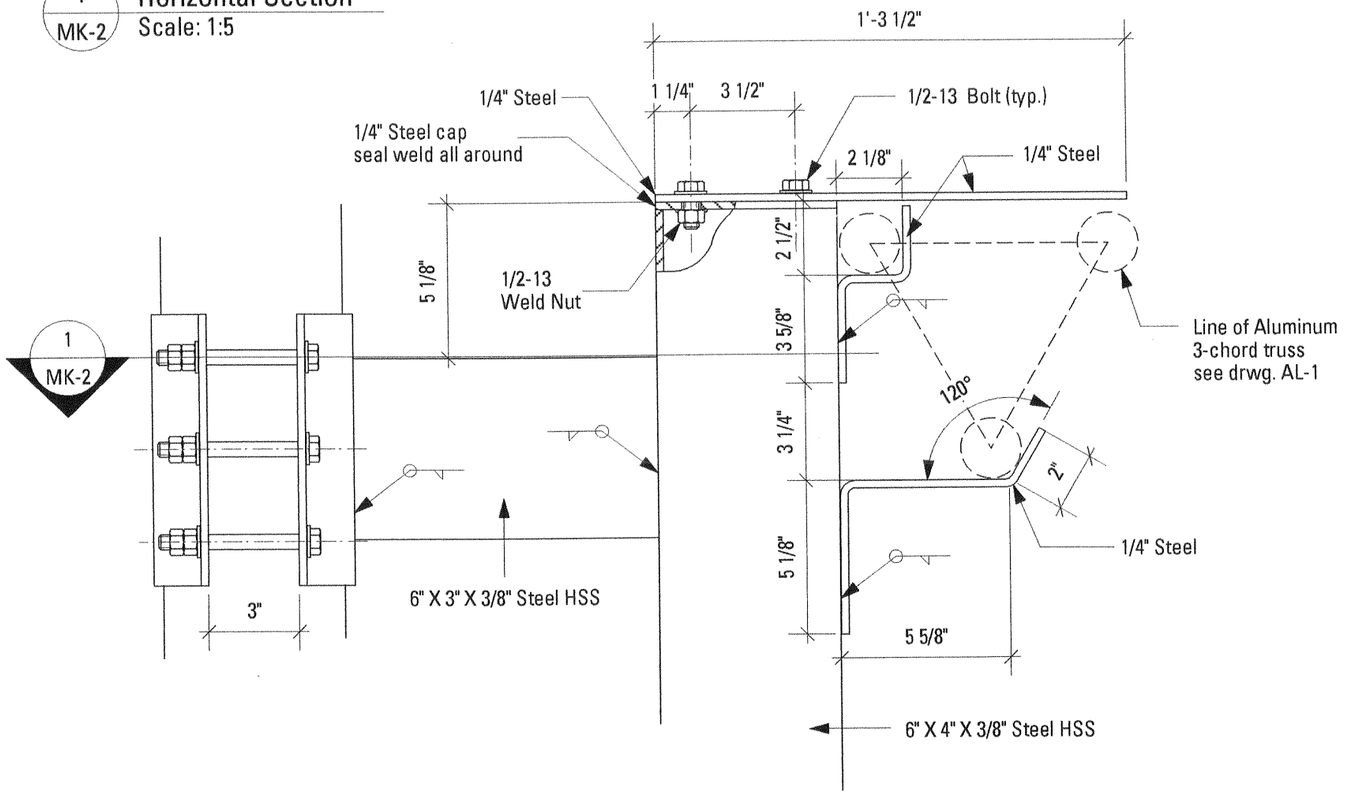

2 / MK-2 Side View
Scale: 1:5

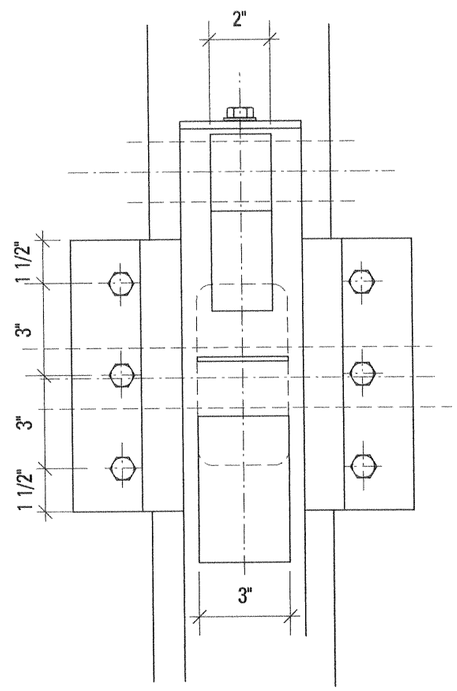

3 / MK-2 Front View
Scale: 1:5

REGISTERED PROFESSIONAL ENGINEER
4/12/02
A.S.WILKINS
PROVINCE OF ONTARIO

INTU DESIGN LTD.
499 BLAIR STREET
OTTAWA ONTARIO
CANADA K1G 0J3

T: 613 523 8359
F: 613 248 4651
E: stewart@intu-design.com
www.intu-design.com

Notes

- All welds shall be fillet type, having a minimum size of 6mm and placed continuously and completely around all connections. Spot welding is not permitted. Welding should be carried out in accordance with CSA W59-M1989 (using E480XX electrodes).
- The steel components shall be provided and meet the requirements of CAN/CSA-G40.20/G40.21-M92, Structural Quality Steels. The grade of the steel shall be 350W.
- All bolts to be either stainless steel or galvanized steel, conforming to the strength requirements of ASTM A325.
- Contractor to verify fit between aluminum frame and steel posts. Contractor to verify fit of brackets on bridge railing posts.
- Fabricator to provide shop drawings for review prior to fabrication.

detail no.
sheet no.

designed by: Stewart Bailey

drawn by: Stewart Bailey

Rideau Canal Skateway

title: **Bridge Banner Support**

drawing: **Mack King Bridge Details**

scale: **As Noted**

date: **12/3/02**

drawing no. **MK-2**

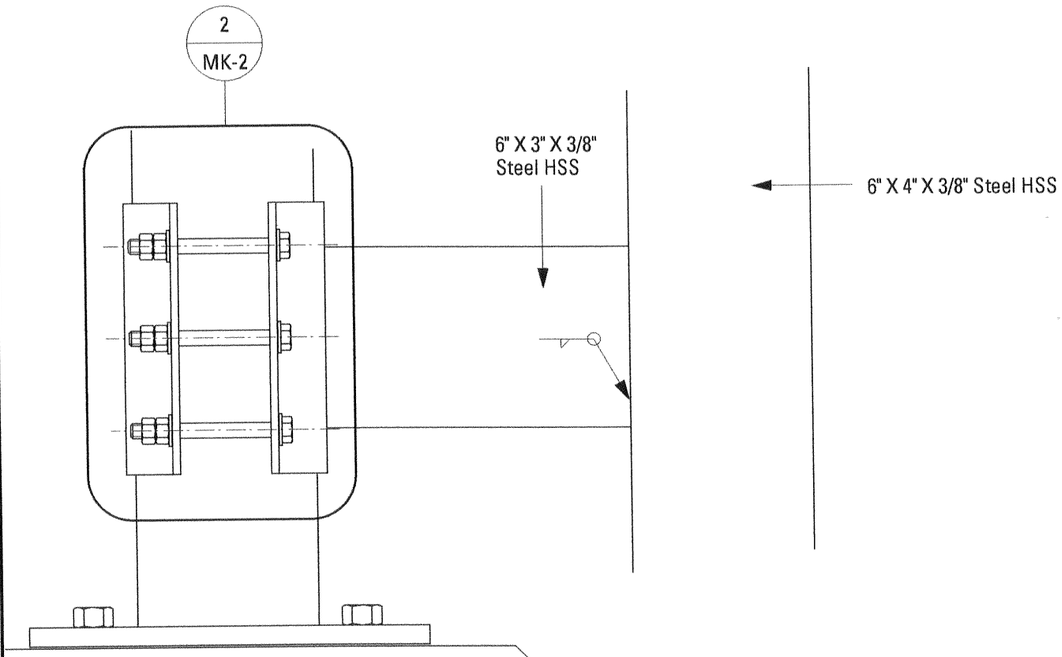

1 / MK-3 Side View - Lower Bracket Detail
Scale: 1:5

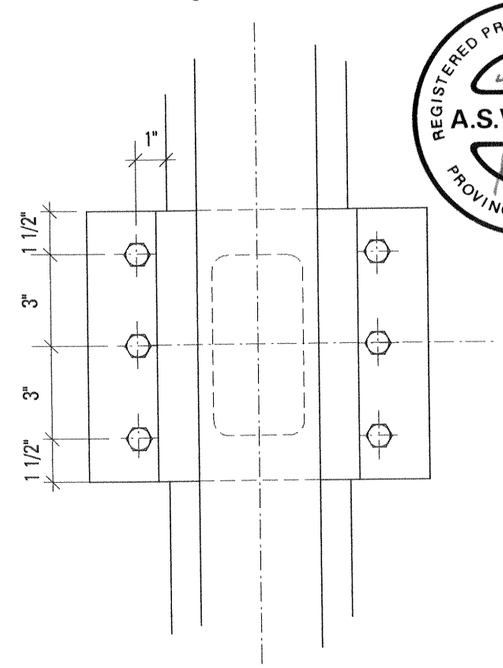

2 / MK-3 Front View - Lower Bracket Detail
Scale: 1:5

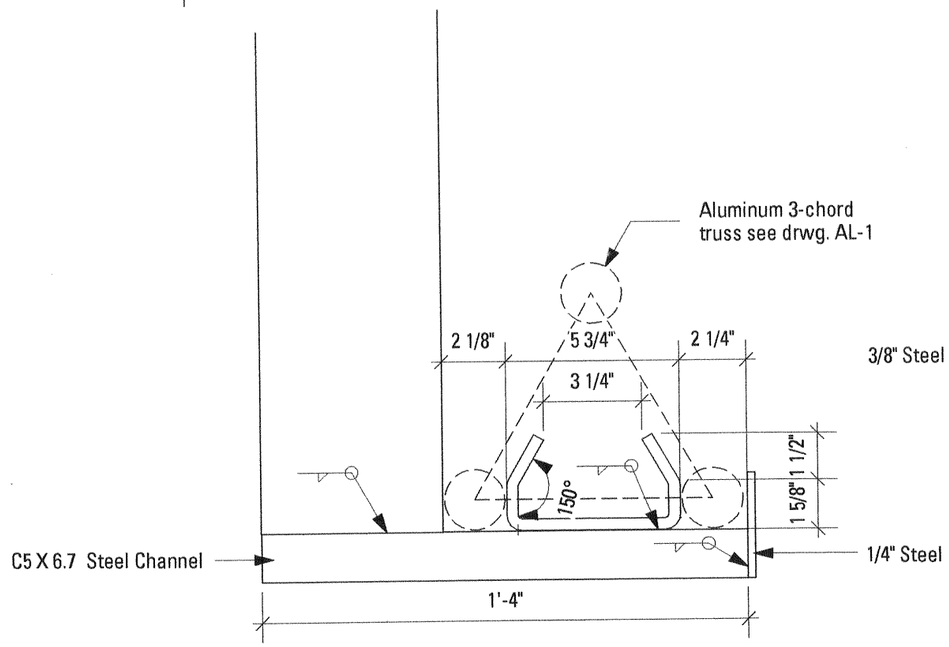

3 / MK-3 Side View - Bottom Support Detail
Scale: 1:5

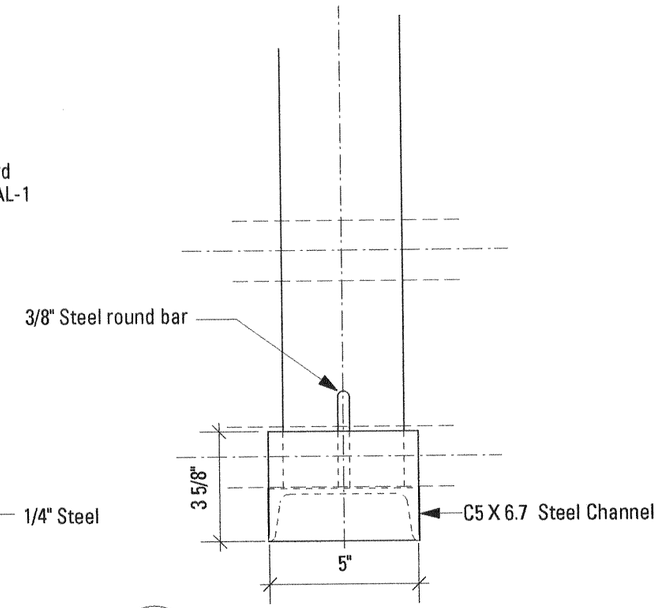

4 / MK-3 Front View - Bottom Support Detail
Scale: 1:5

REGISTERED PROFESSIONAL ENGINEER
4/12/02
A.S.WILKINS
PROVINCE OF ONTARIO

INTU DESIGN LTD.
499 BLAIR STREET
OTTAWA ONTARIO
CANADA K1G 0J3

T: 613 523 8359
F: 613 248 4651
E: stewart@intu-design.com
www.intu-design.com

Notes

- All welds shall be fillet type, having a minimum size of 6mm and placed continuously and completely around all connections. Spot welding is not permitted. Welding should be carried out in accordance with CSA W59-M1989 (using E480XX electrodes).
- The steel components shall be provided and meet the requirements of CAN/CSA-G40.20/G40.21-M92, Structural Quality Steels. The grade of the steel shall be 350W.
- All bolts to be either stainless steel or galvanized steel, conforming to the strength requirements of ASTM A325.
- Contractor to verify fit between aluminum frame and steel posts. Contractor to verify fit of brackets on bridge railing posts.
- Fabricator to provide shop drawings for review prior to fabrication.

detail no.
sheet no.

designed by: Stewart Bailey

drawn by: Stewart Bailey

Rideau Canal Skateway

title: **Bridge Banner Support**

drawing: **Mack King Bridge Details**

scale: **As Noted**

date: **12/3/02**

drawing no. **MK-3**