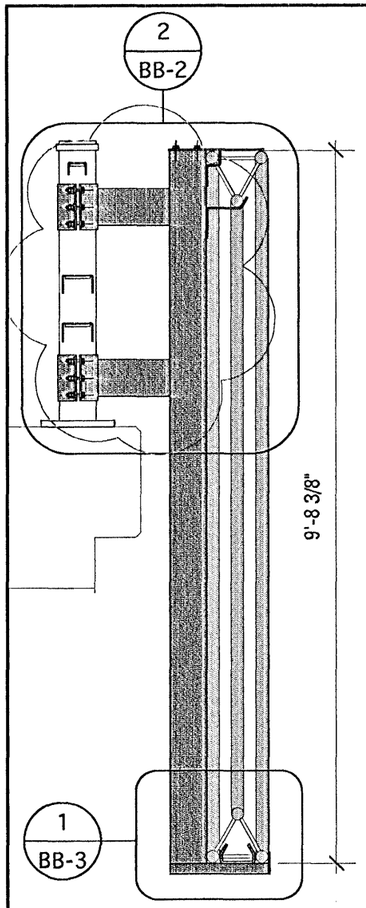

1 BB-1 Vertical Section
Scale: 1:25

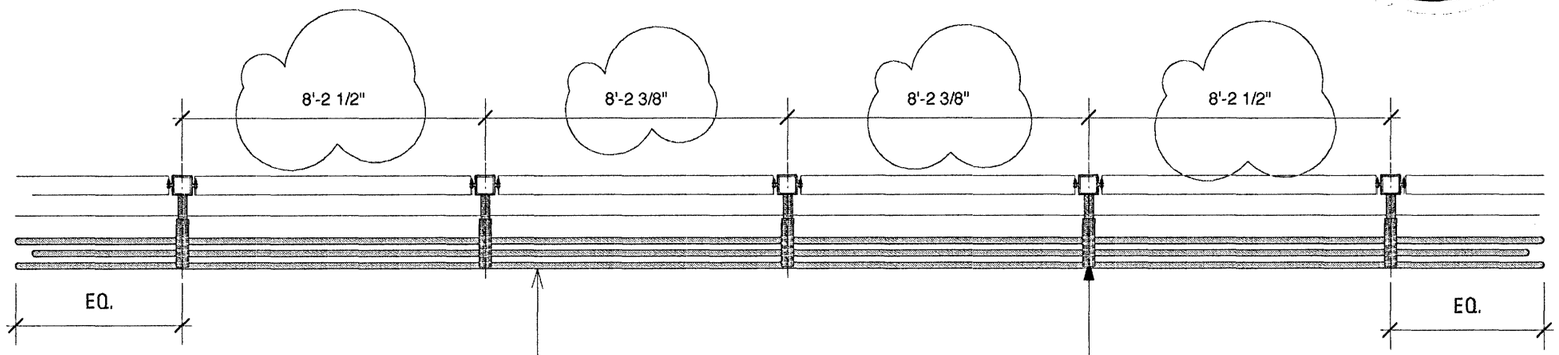

2 BB-1 Top View
Scale: 1:50

Aluminum Tri-Truss Frame
(secures to steel supports)
1 complete assembly required.
See drwg AL-1

Support Post Assembly (5 required)

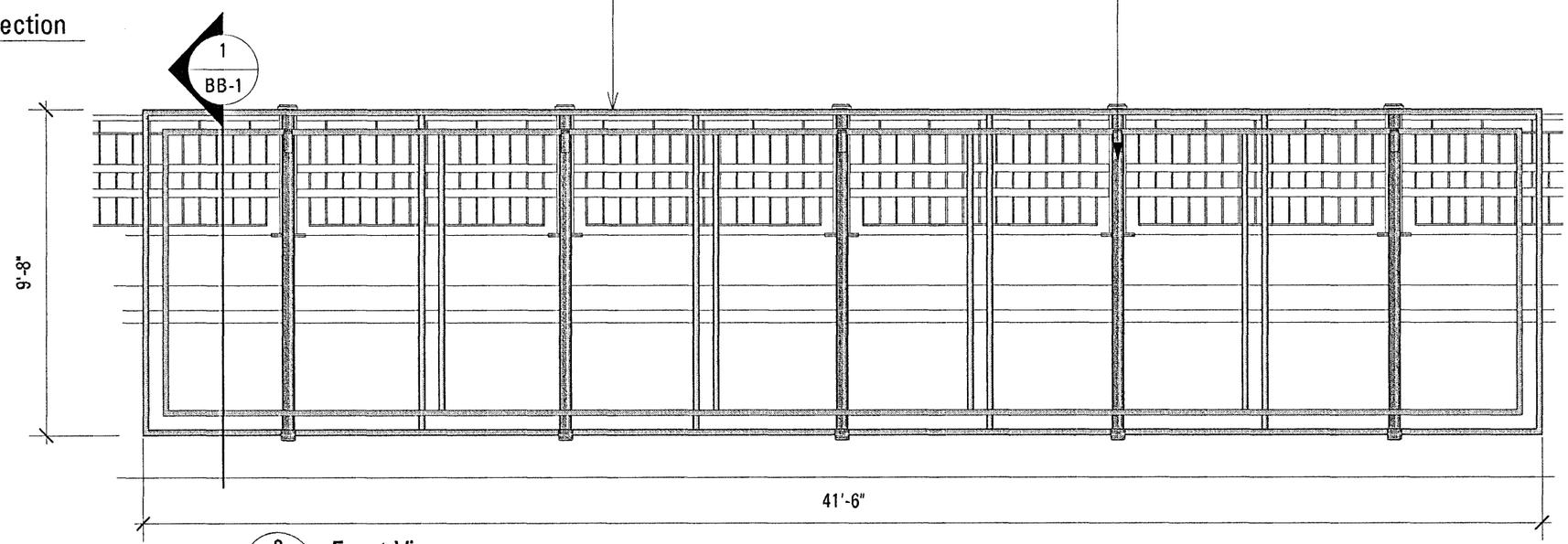

3 BB-1 Front View
Scale: 1:50

REGISTERED PROFESSIONAL ENGINEER
16/11/08
A.S.WILKINS
PROVINCE OF ONTARIO

INTU DESIGN LTD.
499 BLAIR STREET
OTTAWA ONTARIO
CANADA K1G 0J3

T: 613 523 8359
F: 613 248 4651
E: stewart@intu-design.com
www.intu-design.com

Notes

- All welds shall be fillet type, having a minimum size of 6mm and placed continuously and completely around all connections. Spot welding is not permitted. Welding should be carried out in accordance with CSA W59-03 (using E480XX electrodes).
- The steel components shall be provided and meet the requirements of CAN/CSA-G40.20/G40.21- 98, Structural Quality Steels. The grade of the steel shall be 350W.
- All bolts to be either stainless steel or galvanized steel, conforming to the strength requirements of ASTM A325M -04. Washers conforming to ASTM F 436M-03
- Contractor to verify fit between aluminum frame and steel posts. Contractor to verify fit of brackets on bridge railing posts.
- Fabricator to provide shop drawings for review prior to fabrication.
- All steel components to be primed and re-painted to match ANSI 70 (gray)
- All aluminum components to be mill-finish with no coatings applied.
- Assembly to be installed centred over Canal.

1 COMPLETE ASSEMBLY REQUIRED

Revisions

11-7-08 - Revisions to fit new bridge railings.

detail no.
sheet no.

designed by: Stewart Bailey

drawn by: Stewart Bailey

Rideau Canal Skateway

title: **Bridge Banner Support**

drawing: **Bronson Bridge Assembly**

scale: **As Noted**

date: **12/3/02**

drawing no. **BB-1**

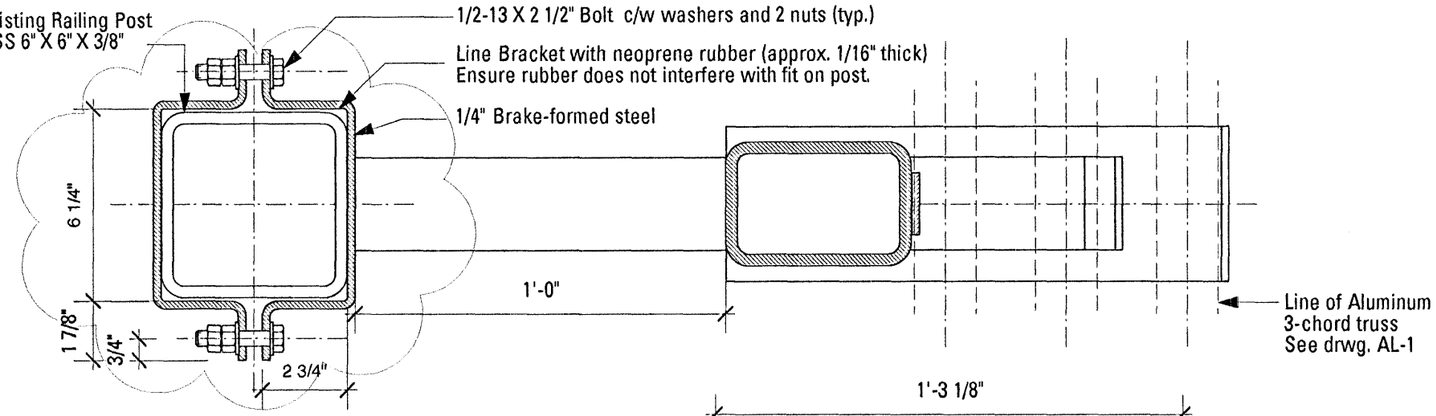

1 / BB-2 Horizontal Section
Scale: 1:5

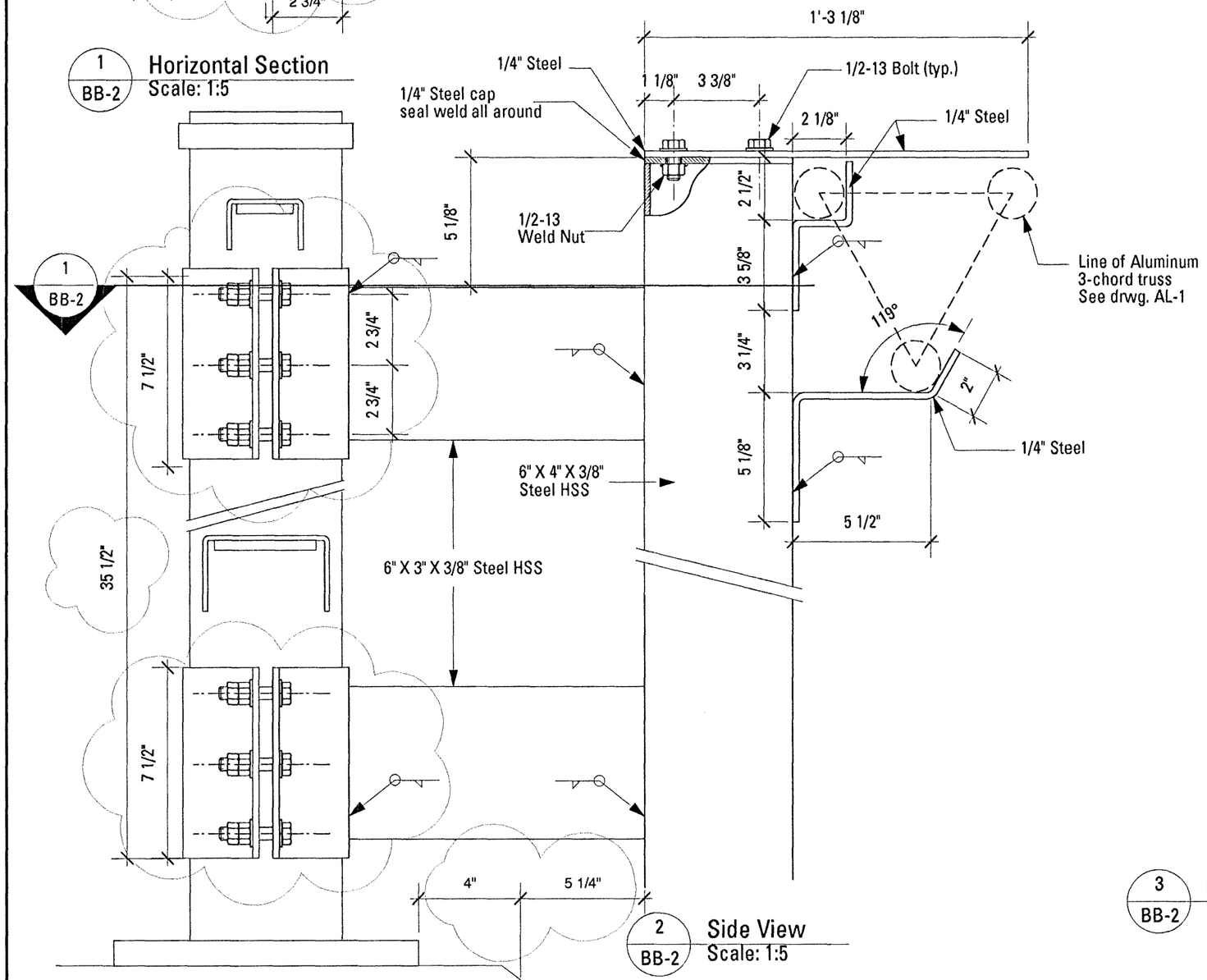

2 / BB-2 Side View
Scale: 1:5

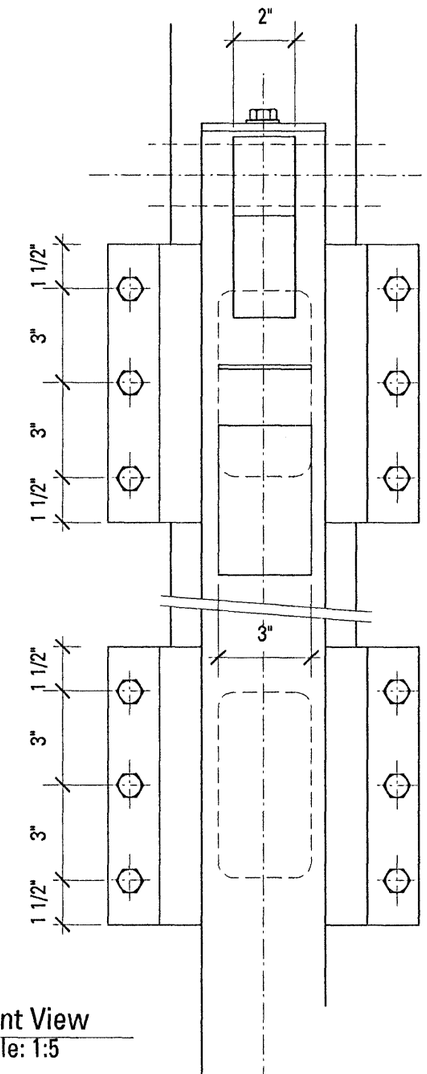

3 / BB-2 Front View
Scale: 1:5

REGISTERED PROFESSIONAL ENGINEER
16/11/08
A.S.WILKINS
PROVINCE OF ONTARIO

INTU DESIGN LTD.
499 BLAIR STREET
OTTAWA ONTARIO
CANADA K1G 0J3
T: 613 523 8359
F: 613 248 4651
E: stewart@intu-design.com
www.intu-design.com

Notes

- All welds shall be fillet type, having a minimum size of 6mm and placed continuously and completely around all connections. Spot welding is not permitted. Welding should be carried out in accordance with CSA W59-03 (using E480XX electrodes).
- The steel components shall be provided and meet the requirements of CAN/CSA-G40.20/G40.21- 98, Structural Quality Steels. The grade of the steel shall be 350W.
- All bolts to be either stainless steel or galvanized steel, conforming to the strength requirements of ASTM A325M-04. Washers conforming to ASTM F 436M-03.
- Contractor to verify fit between aluminum frame and steel posts. Contractor to verify fit of brackets on bridge railing posts.
- Fabricator to provide shop drawings for review prior to fabrication.

Revisions

11-7-08 - Revisions to fit new bridge railings.

detail no.
sheet no.

designed by: Stewart Bailey

drawn by: Stewart Bailey

Rideau Canal Skateway

title: **Bridge Banner Support**

drawing: **Bronson Bridge Details**

scale: **As Noted**

date: **12/3/02**

drawing no. **BB-2**

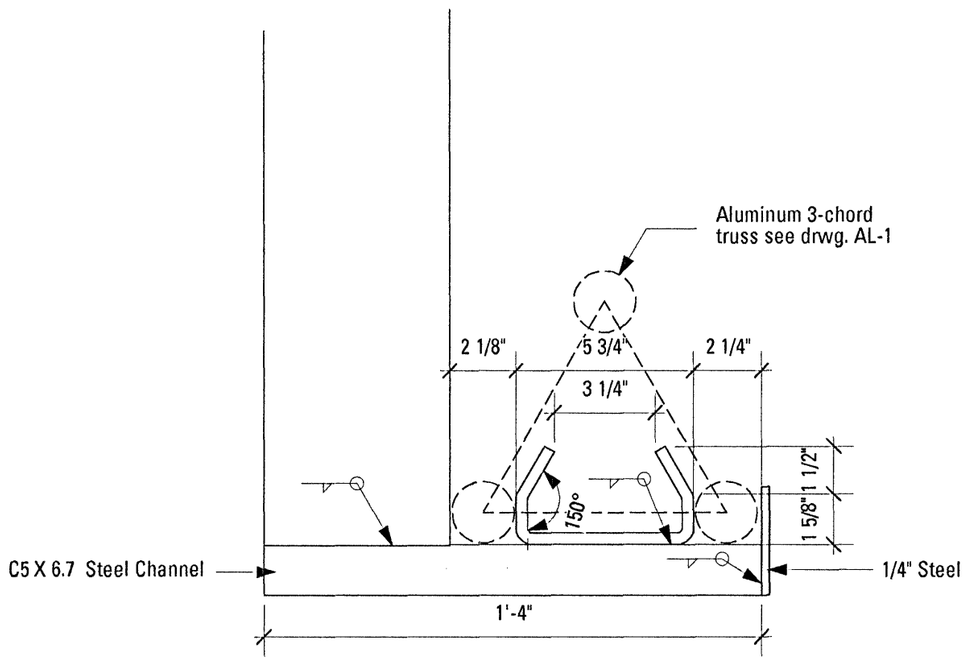

1 / BB-3 Side View - Bottom Support Detail
Scale: 1:5

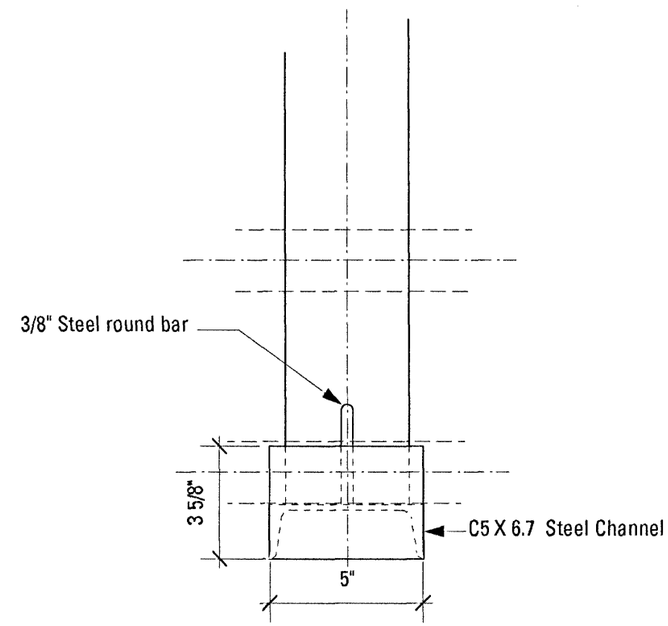

2 / BB-3 Front View - Bottom Support Detail
Scale: 1:5

REGISTERED PROFESSIONAL ENGINEER
A.S.WILKINS
PROVINCE OF ONTARIO

INTU DESIGN LTD.
499 BLAIR STREET
OTTAWA ONTARIO
CANADA K1G 0J3

T: 613 523 8359
F: 613 248 4651
E: stewart@intu-design.com
www.intu-design.com

Notes

- All welds shall be fillet type, having a minimum size of 6mm and placed continuously and completely around all connections. Spot welding is not permitted. Welding should be carried out in accordance with CSA W59-M1989 (using E480XX electrodes).
- The steel components shall be provided and meet the requirements of CAN/CSA-G40.20/G40.21-M92, Structural Quality Steels. The grade of the steel shall be 350W.
- All bolts to be either stainless steel or galvanized steel, conforming to the strength requirements of ASTM A325.
- Contractor to verify fit between aluminum frame and steel posts. Contractor to verify fit of brackets on bridge railing posts.
- Fabricator to provide shop drawings for review prior to fabrication.

detail no.
sheet no.

designed by: Stewart Bailey

drawn by: Stewart Bailey

Rideau Canal Skateway

title: **Bridge Banner Support**

drawing: **Bronson Bridge Details**

scale: **As Noted**

date: **11/7/08**

drawing no. **BB-3**

1 / AL-1 Vertical Section
Scale: 1:50

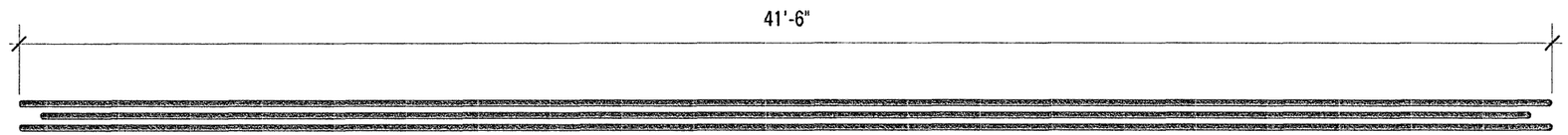

2 / AL-1 Top View
Scale: 1:50

FOR REFERENCE ONLY - FRAME IS EXISTING

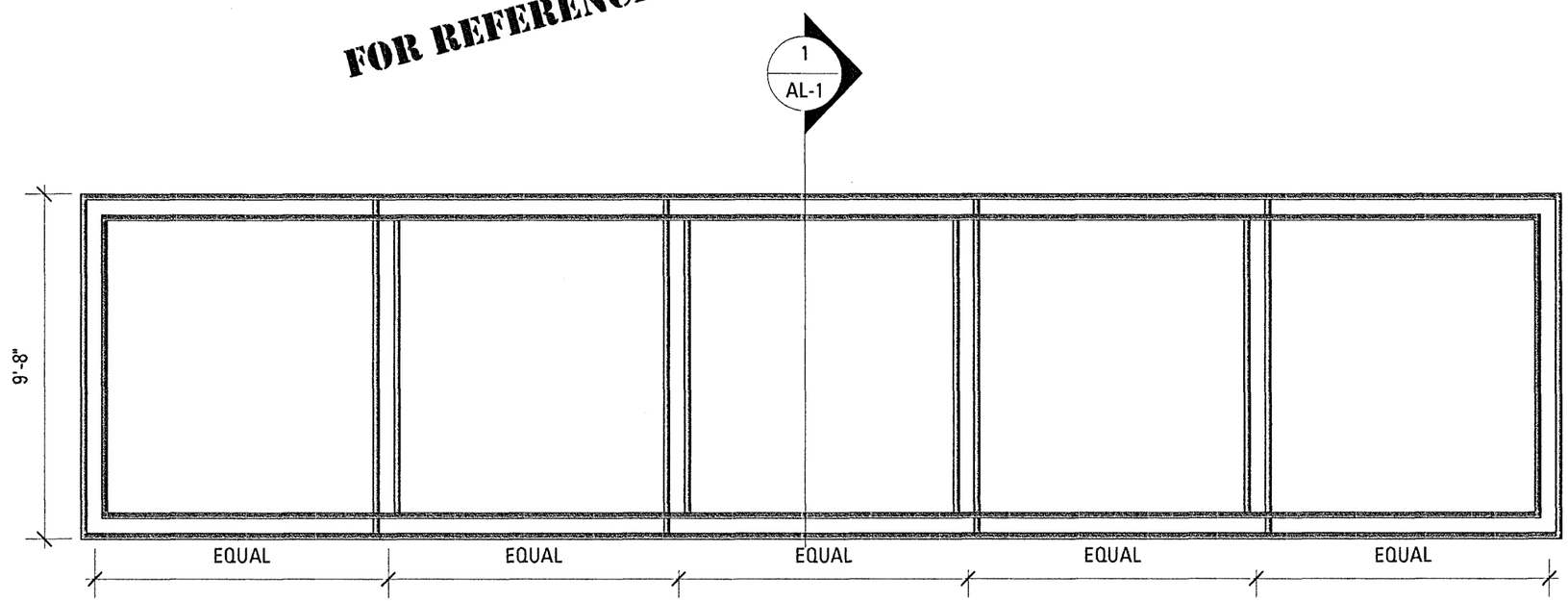

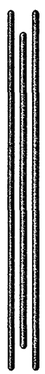

3 / AL-1 Side View
Scale: 1:50

4 / AL-1 Front View
Scale: 1:50

INTU DESIGN LTD.
499 BLAIR STREET
OTTAWA ONTARIO
CANADA K1G 0J3

T: 613 523 8359
F: 613 248 4651
E: stewart@intu-design.com
www.intu-design.com

Notes

- Aluminum triangular truss to be 224mm X 250mm as manufactured by Optikinetics Ltd. and Versatruss.
- All straight sections between junctions to be continuous - no joints permitted.
- Joints at junctions to be bolted connections, ends of all truss and junctions to be fitted with standard reinforcing collars.
- Final size of the assembly as specified on this drawing is critical and is to be held.

2 FRAME ASSEMBLIES REQUIRED

detail no.
sheet no.

designed by: Stewart Bailey

drawn by: Stewart Bailey

Rideau Canal Skateway

title: **Bridge Banner Support**

drawing: **Aluminum Truss Assembly**

scale: **As Noted**

date: **11/28/02**

drawing no. **AL-1**