Hawboldt Industries (1989) Ltd.
P.O. Box 80 Chester, NS, B0J 1J0
Tel: (902) 275-3591
Fax: (902) 275-5014
Website: www.hawboldt.ca
e-mail: hawboldt@hawboldt.ca

AW-60-2-75E

INSTALLATION MANUAL

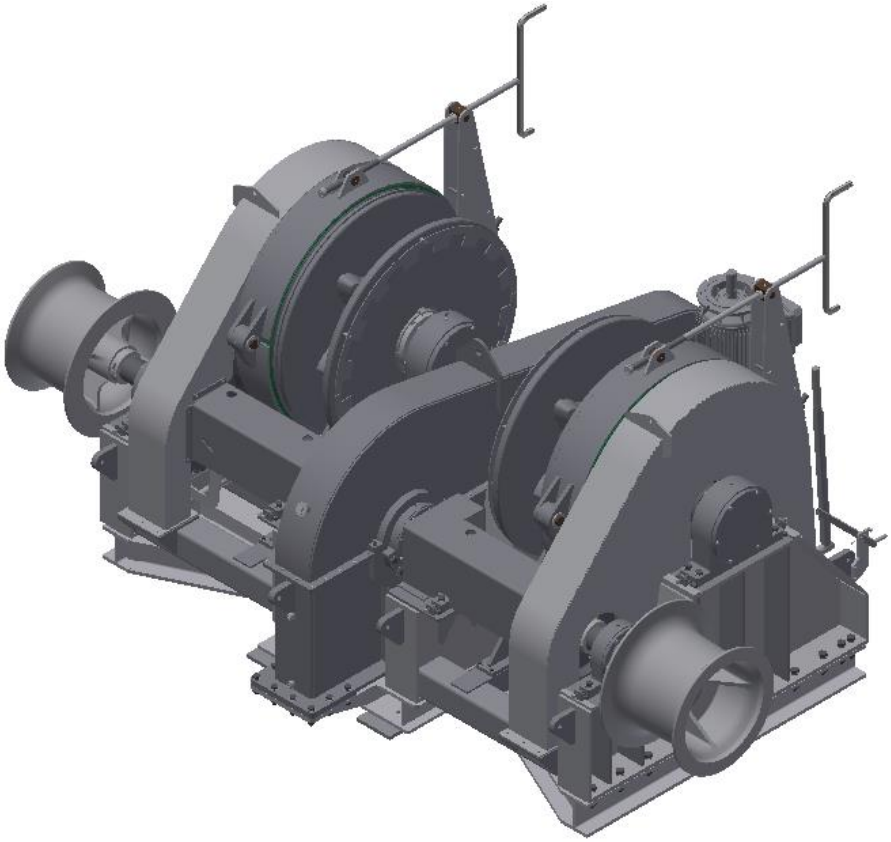

Customer: CCG	**Sales Order:** 39058
Purchase Order: F6855-200001	**Serial Number(s):** 1988-1
Purchase Date: 24-Feb-20	**Revision:** 0

REVISION HISTORY

Rev	Date	Description	Issued By
0	26-Oct-2020	First Issue	PMV

TABLE OF CONTENTS

REVISION HISTORY 1
1.0 WARRANTY 3
2.0 INSTALLATION 4
2.1 MECHANICAL INSTALLATION 4
2.1.1 WINDLASS BASE FRAME INSTALLATION 4
2.1.2 WINDLASS AND OIL BATH INSTALLATION 5
3.0 ELECTRICAL INSTALLATION 8
3.1 PANEL INSTALLATION 8
3.2 BRAKE RESISTOR INSTALLATION 8
3.3 INTERCONNECTING CABLING 9
4.0 APPENDIX 10

1.0 WARRANTY

This section contains the Hawboldt Industries (1989) Ltd. – Standard Terms and Condition of Sale.

Hawboldt Industries (1989) Ltd. – Standard Terms and Condition of Sale

HAWBOLDT INDUSTRIES (1989) LTD.
220 Hwy 14, Chester, NS B0J 1J0
herein referred to as "HAWBOLDT"

GENERAL CONDITIONS OF SALE

I. Design and improvement of our equipment is a continuous process. Hawboldt, therefore, reserves the right to make design improvements after receipt of an order. Photographs and other illustrations or advertising matter represent generally the goods offered, but are not binding in detail.

II. Delivery dates are estimated as accurately as possible, but are not guaranteed in any way unless otherwise specifically provided for in this proposal.

III. Unless otherwise specifically provided for in this proposal, this offer does not include a penalty clause of any kind and acceptance of this offer may not create, by its terms, any such penalty clause.

IV. Prices quoted herein are based on current duty and currency exchange rates where applicable, and Hawboldt reserves the right to adjust prices to compensate for any changes in these rates, should it be necessary to do so.

V. Notwithstanding any conditions printed on the Purchaser's order form, in accepting this offer the Purchaser agrees to the following TERMS AND CONDITIONS OF SALE which are also detailed on the Hawboldt Acknowledgment and Acceptance of Order Form, and these Terms and Conditions only will apply unless otherwise specifically provided in this proposal.

TERMS AND CONDITIONS OF SALE

l. **CONTRACT OF SALE -** This order is accepted on, and is subject to, the terms and conditions set forth on the face hereof and below, none of which may be varied or added to except in writing, signed by HAWBOLDT'S duly authorized representative. Any inconsistent matters, terms or conditions in Purchaser's order or confirmation will not be binding on Hawboldt. HAWBOLDT HEREBY EXPRESSLY OBJECTS TO ANY ADDITIONAL OR DIFFERENT TERMS IN ANY OF PURCHASER'S DOCUMENTS.

2. **COMPLETION -** Unless otherwise provided on the face hereof, time for the completion of manufacture of the machinery and equipment covered by this order (hereinafter called the "Machinery") shall be computed from the date of the Acknowledgment and Acceptance of Order, or from the date on which Hawboldt has received from the Purchaser any information, drawings, data, patterns, or other material which are to be supplied by the Purchaser and are necessary to proceed with the manufacture of the machinery, whichever is the latest. Hawboldt shall not be responsible for delays in delivery or any failure to deliver due to causes beyond its control including without limitations: acts of God or the public enemy; mobilization; blockades; embargoes, revolution; civil commotions, riots; fires; floods; winds; earthquakes; epidemics; quarantine restrictions; explosions; accidents; other catastrophes; strikes; slowdowns; lock-outs or other labour difficulties; the acts; laws or regulations of any government or governmental authority; federal, provincial, local or foreign, including safety, health and environmental regulations; unusual weather; delays of sub-contractors or suppliers; or inability to obtain shipping facilities, labour, raw materials, supplies, fuel or power.

3. **MINIMUM INVOICE -** The minimum single invoice or billing charge is $150.00

4. **PAYMENTS -** If payment of any part of the purchase price is not made as provided on the face hereof, Hawboldt reserves the right to discontinue manufacture of the Machinery until such payment has been made and to revoke any further credit, whereupon Hawboldt shall have the right to receive payment before any further shipment of Machinery. In the case of any delay in payment or in establishing agreed security for payment, time for completion may, at Hawboldt's option, be extended for a corresponding period. When any payment is due upon shipment or delivery and shipment is delayed for any cause beyond Hawboldt's control, payment shall be made when the machinery is ready for shipment. Purchaser agrees that any letters of credit or other guarantee of payment shall be maintained fully valid until final payment has been made. IF PAYMENT IS NOT MADE WITHIN THIRTY DAYS FROM THE DATE OF SHIPMENT UNDER THE TERMS OF THIS AGREEMENT, PURCHASER AGREES TO PAY HAWBOLDT AN ADDITIONAL SUM EQUAL TO 2% PER MONTH, 24% PER ANNUM OF THE UNPAID PURCHASE PRICE UNTIL PAYMENT IS MADE.

5. **SECURITY INTEREST -** Hawboldt retains a vendor's lien in the machinery to secure payment in full of the purchase price and any and all other payments which may be or become payable to Hawboldt hereunder. If possession of the Machinery is given to the Purchaser before full payment, the Purchaser shall execute any additional instruments including without limitation security agreements and financing statements necessary to perfect or maintain Hawboldt's vendor's lien and shall pay or reimburse Hawboldt for all filing and recording costs including without limitation, any taxes payable upon filing or recording. In the event of default in payment of any installment of the purchase price when due, the entire balance thereof shall, at Hawboldt's option, become immediately due and payable, and Hawboldt shall have and may exercise all the rights of a secured party then in force under the laws of the Province of Nova Scotia, Canada or such other province or state as may then have jurisdiction over the machinery, including without limitation the right to repossess the Machinery with or without legal process.

6. **DELIVERY AND PURCHASE PRICE -** Unless otherwise provided on the face hereof, delivery is to be made Ex-Works Hawboldt's plant, Chester, Nova Scotia, Canada. Risk of loss within the meaning of the Sale of Goods act of the Province of Nova Scotia shall pass to the Purchaser at the stated point of delivery. The purchase price includes ordinary packing for shipment, but if special packing or tie-down and blocking to anchor the machinery to the transport vehicle is required, Hawboldt is to be reimbursed for the cost thereof. The shipping charges are the responsibility of the customer. Unless otherwise stated in the purchase order, Hawboldt will select a suitable courier to deliver the goods. The goods will be delivered, with freight charges being on a "collect" basis. The goods will be insured unless otherwise specified by the customer. Any freight or insurance costs, which may be included in the purchase price, are based on rates at the date of the Acknowledgment and Acceptance of Order and any increase shall be paid by the Purchaser.

7. **WARRANTIES -** Hawboldt warrants that it will repair F.O.B. its factory or furnish without charge F.O.B. its factory, a similar part to replace any material in its machinery which, during the earlier of 1 year after the said machinery is put into operation or 18 months after the date of shipment of the machinery from its plant, is proved to the satisfaction of Hawboldt to have been defective at the time it was sold, provided that all parts claimed defective shall be returned, properly identified, to Hawboldt's factory, charges prepaid.

This Warranty to repair applies only to new and unused machinery, which, after shipment from the factory of Hawboldt, has not been altered, changed, repaired or treated in any manner whatsoever unless such alteration, change, repair or treatment has been previously authorized in writing by Hawboldt or has been performed by the authorized service representative of Hawboldt.

This Warranty to repair is the only Warranty either express, implied, or statutory, upon which the said machinery is sold; the company's liability in connection with this transaction is expressly limited to the repair or replacement of defective parts, all other damages and warranties, statutory or otherwise, being hereby expressly waived by the Purchaser.

Component parts and equipment not manufactured by Hawboldt are warranted only to the extent they are warranted by the supplier to Hawboldt. Hawboldt will use reputable suppliers.

Hawboldt shall not be liable for any incidental or consequential damages for breach of any warranty and the Purchaser's sole remedy for breach of any warranty or for any negligence of Hawboldt shall be as set forth herein.

Hawboldt makes no warranty that the machinery shall be merchantable or fit for any particular purpose nor does it make any other warranty, express or implied except as is expressly set forth herein. Hawboldt warrants that the machinery will conform to the description on the face hereof; that it will convey good title thereto; that such goods will be delivered free from any lawful security interest or other lien or encumbrance unknown to the purchaser except as otherwise expressly provided herein.

No representative of Hawboldt has authority to change this Warranty or this contract in any manner whatsoever and no attempt to repair or promise to repair or improve the machinery covered by this contract by any

representative of Hawboldt shall waive any consideration of the contract or change or extend this Warranty in any manner whatsoever.

8. **LIABILITY -** Purchaser agrees to hold Hawboldt harmless from, and to indemnify it against, any and all claims, demands, actions, and causes of action of any nature whatsoever, and any expenses incident to the defence thereof, for injury to or death of persons and loss of or damage to property arising in connection with the Machinery or the assembly, erection, operation, or use thereof.
Hawboldt shall be under no obligation after shipment to assemble, erect or test the machinery unless specifically provided for on the face hereof. If the contract provides for instruction or installation services, Hawboldt's sole obligation with respect thereto shall be to provide the purchaser at his expense, (unless otherwise provided herein) an experienced person or persons, who shall become the agent or agents of the Purchaser and remain such for the period provided. Hawboldt shall under no circumstances be liable to the Purchaser or anyone else for any acts or omissions of any such person or persons.

9. **TAXES -** All present and future sales, use, excise and similar taxes imposed by any federal, provincial, local or foreign government which Hawboldt may be required to pay or collect with respect to the machinery or the sale, transportation, storage, use or consumption thereof shall be for the account of the Purchaser to the extent permitted by law. Unless otherwise stated in the proposal, Federal and Provincial sales taxes are not included in prices quoted for domestic sale. With the exception of the province of Nova Scotia, the purchaser is responsible for remittance of Provincial taxes.

10. **NON-CANCELLABLE -** This order is not subject to cancellation or revision by the Purchaser except with Hawboldt's written consent. Cancellation charges will be:
(a) Fifteen percent (15%) of the total purchase price to cover Sales Administration and handling costs, plus
(b) The cost of all unfinished material and the shop labour with overhead plus component cancellation charges from Hawboldt's vendors if any, plus Engineering costs incurred with overhead, plus profit in proportion to the state of completion of the product at the time of cancellation of the order. Upon payment to Hawboldt as above provided, all equipment manufactured under the contract will become the property of the Purchaser.

11. **NON-ASSIGNABLE -** Neither this contract nor any interest herein is assignable or transferable without the express written consent of Hawboldt.

12. **WAIVER -** Any waiver by either the Purchaser or Hawboldt of a breach by the other of any provision of this contract of sale shall not be deemed a waiver of future compliance therewith, and all provisions shall remain in full force and effect, notwithstanding any such waiver.

13. **LIMITATION OF ACTION -** No action shall be brought by the Purchaser for any alleged breach by Hawboldt of this Contract of Sale more than one (1) year after the occurrence of the cause of such alleged breach of contract.

14. **APPLICABLE LAW -** This contract shall be governed and construed according to the law of the Province of Nova Scotia, Canada.

15. **DELAY IN SHIPMENT** - Prices quoted are based on shipment dates indicated. If shipment is delayed at the request of the customer, or because of incomplete shipping information/documentation, or a delay in receipt of customers order confirmation, or because of delay in receipt of Letter of Credit (if applicable), Hawboldt reserves the right to review extra costs resulting from delay and increase prices accordingly.

16. **INSPECTION AND TESTING** - The equipment quoted will be subject to standard Hawboldt inspection and testing before shipment. Any other inspection or testing required by the customer must be specified at time of the order and shall be at the customer's expense unless otherwise stated in the proposal. Customer will be responsible for costs of inspection and tests requested after Hawboldt's acceptance of the order and any costs resulting from delay in shipment.

17. **QUANTITIES** - Prices quoted are based on the purchase of the quantities indicated. Prices may be adjusted by Hawboldt if quantities other than those quoted are actually purchased.

SPECIAL CONDITIONS FOR EXPORT SALES

A. **EXPORT LICENSE -** if any Canadian regulation requires an export license, Hawboldt will apply for such license at its expense, and Purchaser agrees to furnish all information required for such license application. In case Hawboldt is unable to secure an export license, the contract between the parties shall be cancelled without liability on either party.

B. **IMPORT LICENSE -** If an import license is required, it is to be provided by Purchaser who will see that it remains valid and effective until the import has been completed.

C. **REGULATIONS -** The making and performance of the contract between the parties are subject to compliance with all applicable laws and regulations of the Canadian Government and agencies thereof, and in case any such law or regulation should prevent Hawboldt from performing or completing the contract in accordance with the terms thereof, then the contract may be terminated by Hawboldt upon written notice to the Purchaser. In such event, Hawboldt and any surety for Hawboldt will be relieved of all further obligation to proceed; any guaranty deposit or surety bond furnished by Hawboldt shall immediately be returned to Hawboldt and Hawboldt is to be paid the proportion of the contract price, including profit, represented by the expenditure made and the obligations contracted to the date of such termination. Upon return to Hawboldt of any guaranty deposit or surety bond and payment to Hawboldt as above provided, all equipment manufactured under the contract will become the property of the Purchaser.

D. **PAYMENT TERMS** - Unless other mutually agreed to payment terms are arranged in advance in writing, payment will be by Irrevocable Letter of Credit Confirmed by any Chartered Canadian Bank, payable at sight. Unless otherwise stated in the body of this proposal, equipment will be supplied ex-works (not including shipping preparation and loading) INCO International Chamber of Commerce, 2000 Revision, Publication 560, with payment to be made against the Confirmed Irrevocable Letter of Credit upon presentation of shipping documents. The Letter of Credit shall be established with Hawboldt 's bank, all charges for the account of the Buyer.

E. **SHIPMENT DATE** - Equipment offered in this proposal is "estimated" to be ready for shipment in the time frame indicated on the proposal. Shipment date is based on receipt of firm order, a Letter of Credit acceptable to Hawboldt, and down payment (if required) at our Chester, Nova Scotia Office. Shipping date will be confirmed at time of order.

F. **CURRENCY AND TAXES** - Unless otherwise stated prices quoted are in Canadian funds, and do not include any import duties, customs fees or taxes of country of import. No Canadian taxes are applicable or included.

G. **PACKAGING** - Unless otherwise stated prices quoted are on shipment in suitable ocean containers. However, Hawboldt has the facilities to partial crate or full crate the equipment quoted. Prices for this service can be quoted at the customer's request.

H. **FEES** - All handling and freight forwarding fees are to the account of the buyer.

I. **DOCUMENTATION REQUIREMENTS** - Received for Shipment Ocean Bills of Lading or Freight Forwarders Certificate of Receipt in cases where customer has specified use of a freight forwarder.

2.0 INSTALLATION

CAUTION! A paint repair kit has been included in your shipment. If paint is not touched up after installation, components will start to rust.

CAUTION! All bare metal surfaces on your winch have been coated with a rust prevention coating prior to shipping. This coating should be removed before use.

2.1 MECHANICAL INSTALLATION

Drawing 34-00322-000 - General Arrangement provides the layout of the windlass including overall dimensions and footprint. The windlass will be shipped in 4 separate assemblies; the base frame, port windlass, starboard windlass, and oil bath. Mechanical installation instructions for all components are as follows.

2.1.1 WINDLASS BASE FRAME INSTALLATION

1. Remove the existing windlass and clean the top face of the existing deck foundation. Remove any rust or paint.
2. Place windlass base frame down on deck foundation. The aftmost edge of the base and foundation should be flush. The base should be centered athwart the foundation.

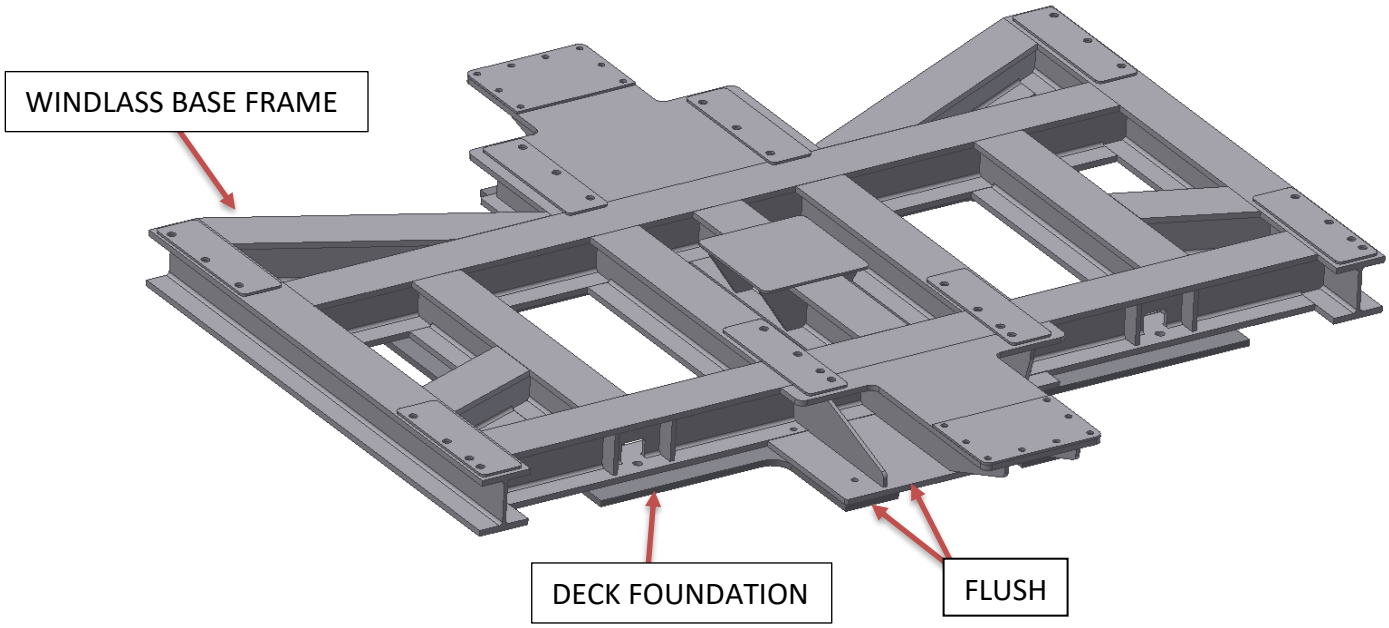

3. Once aligned, matchmark the bolt hole locations on the base with the vessel foundation holes from underneath. All drilled holes to be 1-5/16” (clearance for a 1-1/4” bolt). Open existing vessel holes to 1-5/16” if they are not that size already.

4. Remove base from foundation and drill holes where it has been marked.
5. Apply Devcon (not provided by Hawboldt) to top face of foundation where windlass will rest. This will help fill any gaps between the mating faces of the base and foundation. Be sure to keep the mounting holes clear of Devcon.
6. Place windlass base on to foundation as mentioned above. Check to see if there are still any air gaps. Fill gaps with more Devcon if required.
7. Install mounting hardware (Bolts, nuts and flat washers, not provided by Hawboldt) and hand tighten only. Bolts and nuts should be of SAE Grade 8 material, and flat washers should be hardened.
8. Let Devcon cure for 24 hours.
9. Once the Devcon is cured, torque mounting bolts to 1363 ft-lbs.

2.1.2 WINDLASS AND OIL BATH INSTALLATION

1. Place the oil bath on the base and install mounting hardware in each of the 4 corners. Torque slightly, just enough to prevent unwanted movement of the oil bath.
2. Place the port and starboard windlasses on the base.
3. Align the jaw couplings of each windlass to the jaw couplings on the oil bath, this is done with 2 measurements:
    a. To ensure angular alignment, place a straight edge along the length of the engaged couplings on one of the windlasses. An air gap of 0.020” or more at any point along the coupling length indicates the windlass is misaligned and needs to be adjusted. Check this alignment at 4 places, 90 degrees apart around the circumference of the couplings to ensure complete alignment. Once it is verified the couplings are aligned, do the same on the other windlass.

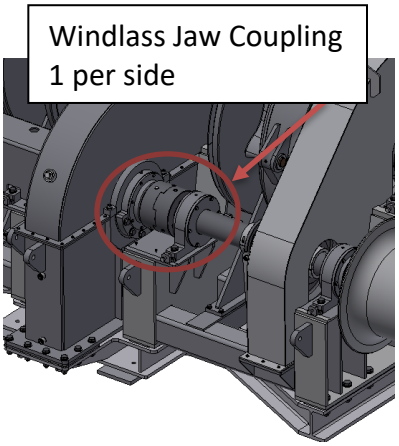

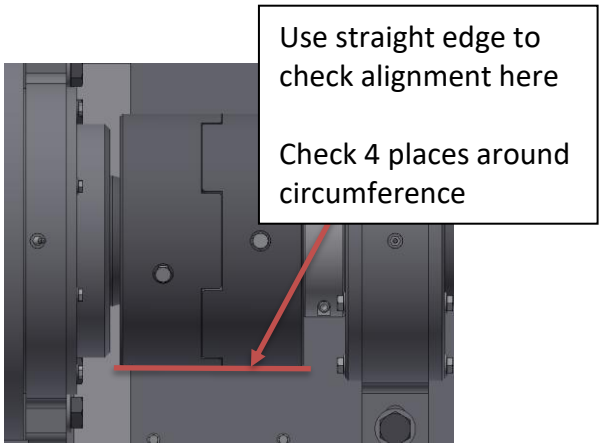

b. To ensure axial alignment, use feeler gauges to check the clearance between the two coupling halves. There should be approx. 0.020” clearance all the way around the coupling. Once this is verified, repeat for the other windlass.

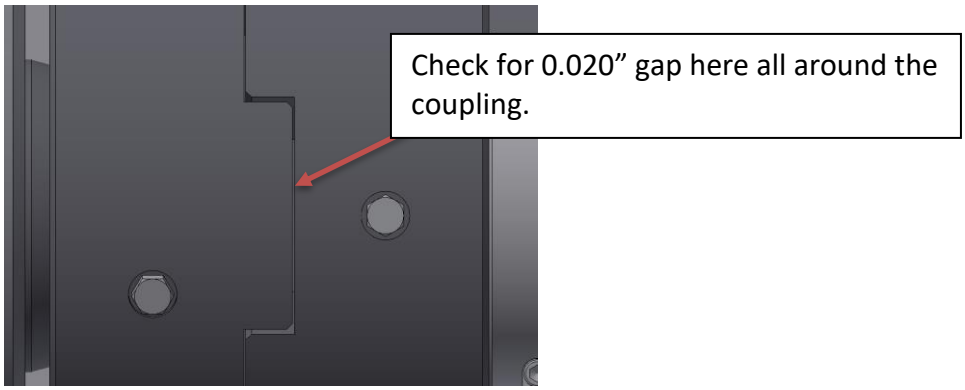

4. Once the couplings are aligned, install and tighten bolts on the outer sides of both windlasses. Torque these bolts to a third of the full torque value (450 ft-lbs.).

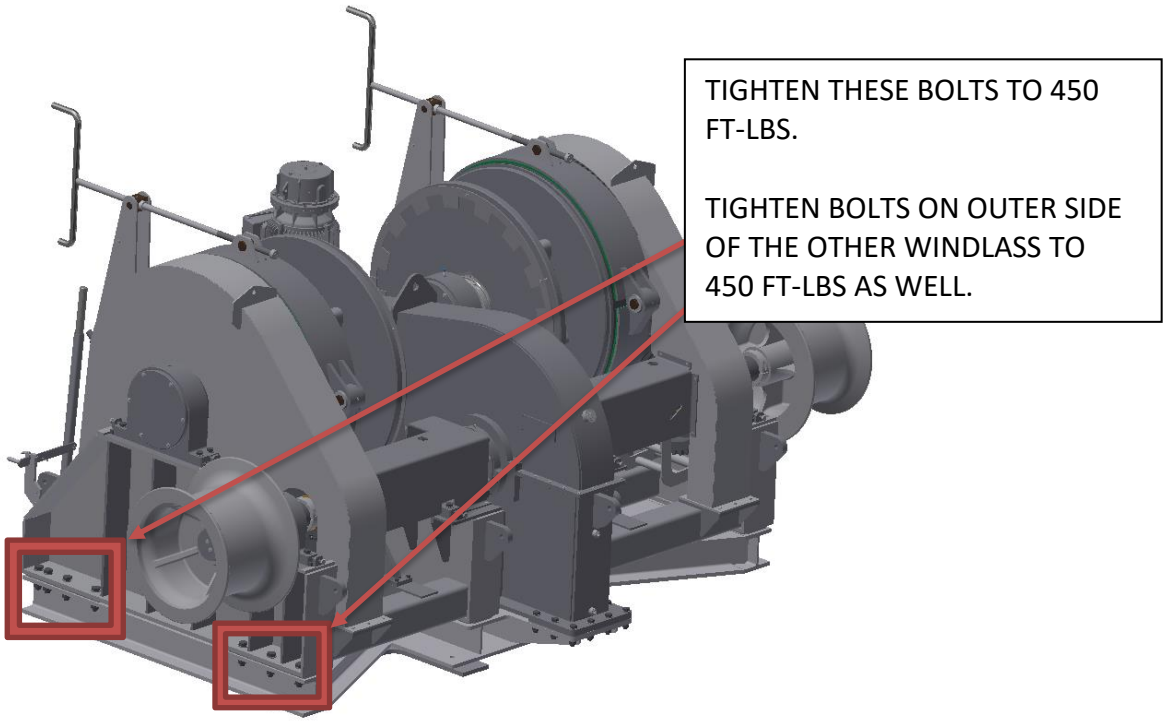

5. Remove back shaft covers, remove split collars shown below, and slide 1 half of the jaw coupling away from the oil bath.

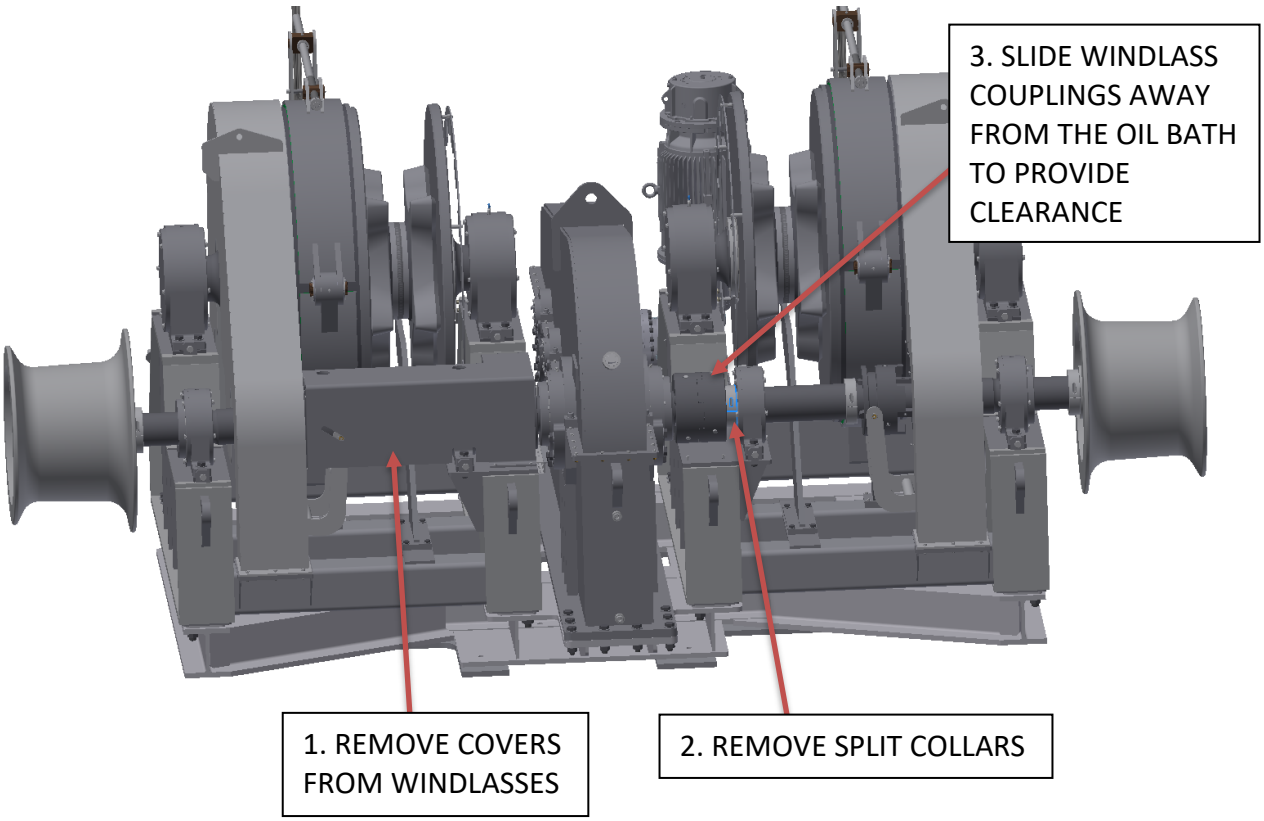

6. Remove oil bath from base.
7. Torque down inside bolts of both windlass frames to 1363 ft-lbs. Torque the outside bolts up to their final value of 1363 ft-lbs.
8. Place oil bath back onto the base between the windlasses.
9. Align oil bath couplings with windlass couplings as previously stated in step 3.
10. Reinstall removed shaft split collars and back shaft covers.
11. Install and torque oil bath mounting bolts to 681 ft-lbs.

3.0 ELECTRICAL INSTALLATION

3.1 PANEL INSTALLATION

There are 2 panels to mount on the vessel; the VFD panel and the windlass control station.

The VFD panel is 60” high x 36” wide x 20” deep and is made of painted carbon steel; it should be mounted indoors. Interconnecting cables shall enter through the bottom of the panel.

The windlass control station is the sole control location for the windlass, and should be mounted outside on the deck near the windlass. See below for a picture of the control station:

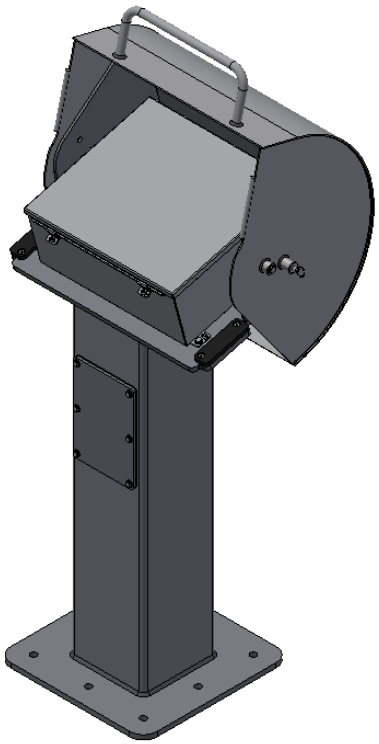

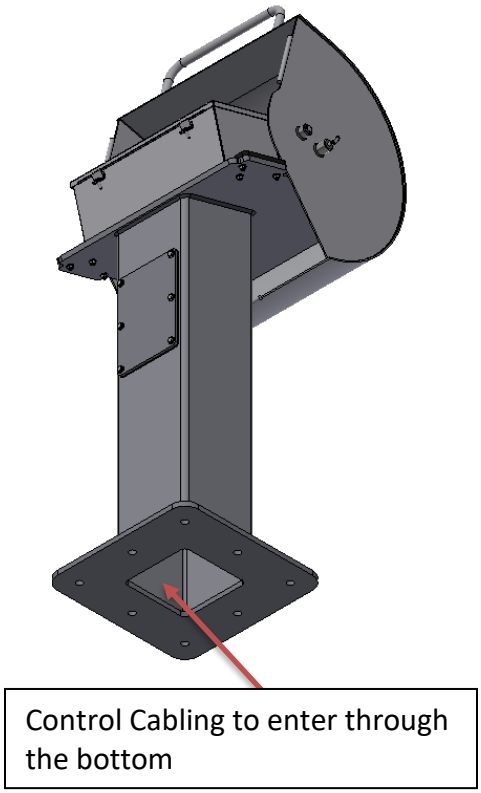

3.2 BRAKE RESISTOR INSTALLATION

The brake resistor should be mounted indoors, as it is a naturally ventilated resistor. A drawing of the resistor has been including in the appendix.

3.3 INTERCONNECTING CABLING

Cabling must be installed and terminated as per interconnection drawing 7400428 and electrical schematic 7400427.

Hawboldt is not providing the cables required for interconnection.

Note that all cables shall meet 46 CFR 111.60-1 requirements.

4.0 APPENDIX

REV	DATE	CHANGE NUMBER	AMENDMENTS	BY	APPD

INTERCONNECTION DIAGRAM

38

REFER TO:	7400427 WIRING DIAGRAM
REFER TO:	7400429 PANEL LAYOUT

CABLE GLANDS SUPPLIED BY HAWBOLDT

CABLE GLANDS SUPPLIED BY THE CUSTOMER

CABLE SUPPLIED BY HAWBOLDT

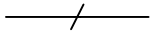

CABLE SUPPLIED BY CUSTOMER *

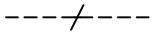

*** NOTE ALL INTERCONNECTING CABLES MUST MEET THE 46 CFR 111.60-1 REQUIREMENTS ***

ITEM	PART NUMBER	OPER	DESCRIPTION	MATERIAL	QTY	
9	5403971	1	ENCLOSURE, 16"X14"X6", 316SS		1	
12	D401043		CCG DUAL WINDLASS CONTROL CONSOLE DECAL		1	
10	5408585	1	ENCLOSURE, 8"X6"X3.5", 316SS		REF	
14	7400429	1	CCG DUAL WINDLASS PANEL LAYOUT		REF	
15	7400427		CCG DUAL WINDLASS WIRING DIAGRAM		REF	
16	7400428		CCG DUAL WINDLASS INTERCONNECTION DIAGRAM		REF	

This print is the property of Hawboldt Industries Inc. It is loaned with the express agreement that the drawing and the information contained therein are the property of Hawboldt Industries Inc. and will not be reproduced, copied or otherwise disposed of directly or indirectly, and will not be used in whole or in part to assist in making or to furnish any information for making drawings, prints or other reproductions thereof or for the making of apparatus or parts thereof except upon written permission of Hawboldt Industries Inc. The acceptance of the print will be construed as an acceptance of the foregoing agreement.

UNLESS OTHERWISE SPECIFIED
DIMENSIONS ARE INCHES
DIMENSIONS IN [ ] ARE MM
-TOLERANCES-

A) ANGULAR		± 1/2°
B) DECIMAL	(ONE) .X	± .06
	(TWO) .XX	± .02
	(THREE) .XXX	± .01
C) FRACTIONAL		
1. GENERAL		± 1/32
2. SAWING, FLAME CUTTING, SHEARING & BREAKING		± 1/16
3. WELDING		± 1/8

HAWBOLDT INDUSTRIES
Chester, Nova Scotia, Canada

MATL CERT N/R	TITLE CCG DUAL WINDLASS	INTERCONNECTION	
MATL TEST N/R	FIRST USED ON WO	DERIVED FROM	
WELD TEST N/R	WO 1988	SHEET 1	OF 2
EST LBS N/A	DRAWN IC / CHECKED YM / APPROVED YM	7400428	REV
ACT LBS N/A	DATE 6/23/20 / SCALE 1/1		

REV	DATE	CHANGE NUMBER	AMENDMENTS	BY	APPD

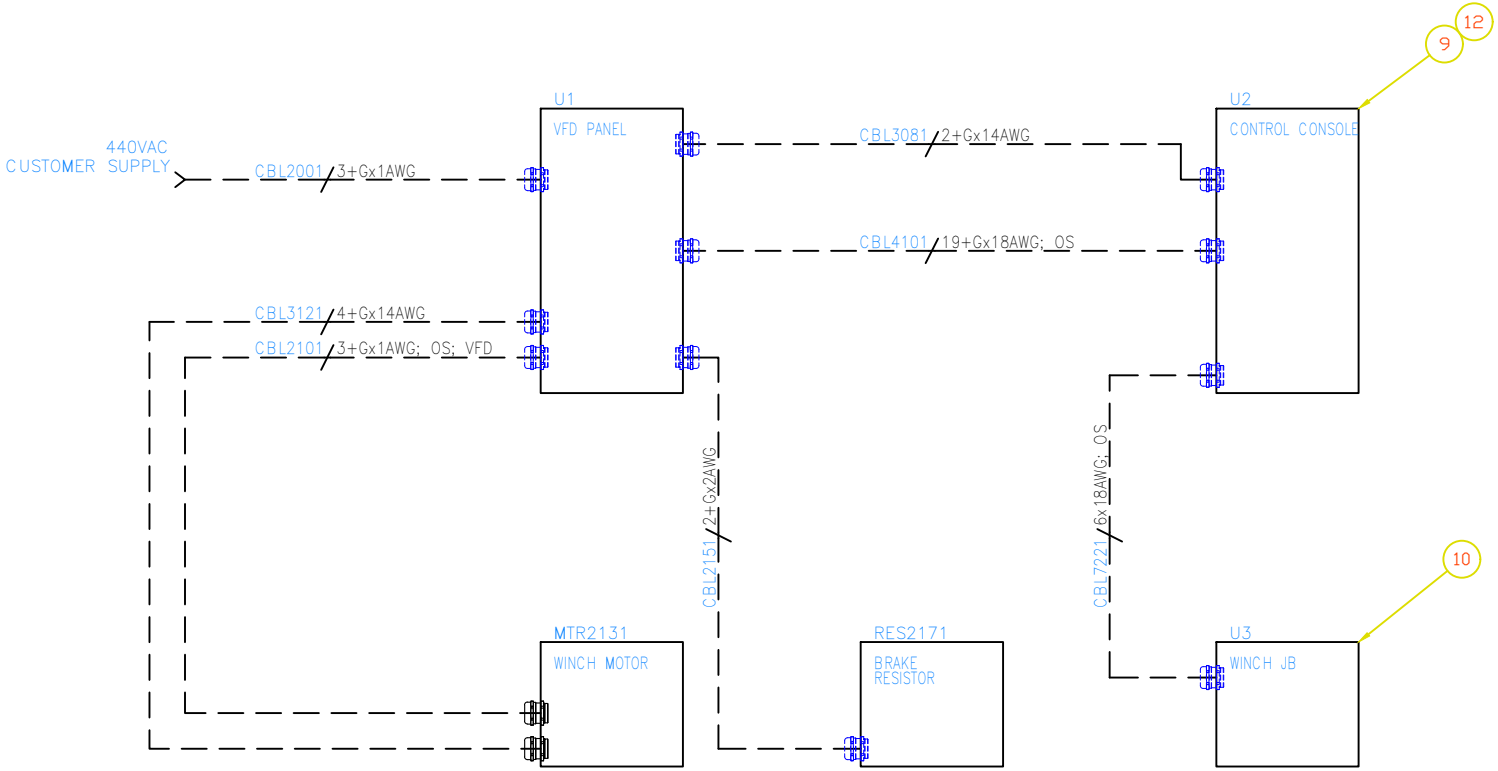

This print is the property of Hawboldt Industries Inc. It is loaned with the express agreement that the drawing and the information contained therein are the property of Hawboldt Industries Inc. and will not be reproduced, copied or otherwise disposed of directly or indirectly, and will not be used in whole or in part to assist in making or to furnish any information for making drawings, prints or other reproductions thereof or for the making of apparatus or parts thereof except upon written permission of Hawboldt Industries Inc. The acceptance of the print will be construed as an acceptance of the foregoing agreement.

UNLESS OTHERWISE SPECIFIED
DIMENSIONS ARE INCHES
DIMENSIONS IN [ ] ARE MM
-TOLERANCES-

A) ANGULAR		± 1/2°
B) DECIMAL	(ONE) .X	± .06
	(TWO) .XX	± .02
	(THREE) .XXX	± .01
C) FRACTIONAL		
1. GENERAL		± 1/32
2. SAWING, FLAME CUTTING, SHEARING & BREAKING		± 1/16
3. WELDING		± 1/8

HAWBOLDT INDUSTRIES
Chester, Nova Scotia, Canada

MATL CERT N/R	TITLE CCG DUAL WINDLASS		INTERCONNECTION
MATL TEST N/R	FIRST USED ON WO		DERIVED FROM
WELD TEST N/R	WO 1988		SHEET 2 OF 2
EST LBS N/A	DRAWN IC	CHECKED YM / APPROVED YM	7400428 REV
ACT LBS N/A	DATE 6/23/20	SCALE 1/1	

LEGEND

SYMBOL	MEANING
TB-03	TERMINAL BLOCK
2001	PANEL WIRE
2003	INTERCONNECTION WIRE
2011 to 202 EXAMPLE	SOURCE ARROW
from 201 EXAMPLE 2011	DESTINATION ARROW
2031 2032 2033	NO CONNECTION
2034	CONNECTION POINT
2041	24VDC WIRE
2044	230VAC WIRE
2051	480VAC WIRE
2061	PANEL CABLE
2062	INTERCONNECTION CABLE

REV	DATE	CHANGE NUMBER	AMENDMENTS	BY	APPD
A	08/08/20	4734	FAN WAS ADDED, CHANGE FUSE SIZE	IC	YM

WIRING DIAGRAM

15

REFER TO:	7400429 PANEL LAYOUT
REFER TO:	7400428 INTERCONNECTION DIAGRAM

ITEM	PART NUMBER	OPER	DESCRIPTION	MATERIAL	QTY	
1	5004553	1	SAFETY RELAY	4 NO, 1 NC	1	
2	5408027	1	POWER SUPPLY, 1-phase, 24 V DC/10 A		1	
3	5409403	1	BRAKE RESISTOR, NATURALLY VENTILATED		1	
4	5409405	1	VFD; 380 TO 500V; 75KW	IP21, FRAME R6	1	
5	5406403	1	1-AXES JOYSTICK		1	
6	5407160	2	PANEL COUNTER		2	
7	5409521	1	PANEL CURRENT METER		1	
14	7400429	1	CCG DUAL WINDLASS PANEL LAYOUT		1	
15	7400427		CCG DUAL WINDLASS WIRING DIAGRAM		REF	
16	7400428		CCG DUAL WINDLASS INTERCONNECTION DIAGRAM		REF	

This print is the property of Hawboldt Industries Inc. It is loaned with the express agreement that the drawing and the information contained therein are the property of Hawboldt Industries Inc. and will not be reproduced, copied or otherwise disposed of directly or indirectly, and will not be used in whole or in part to assist in making or to furnish any information for making drawings, prints or other reproductions thereof or for the making of apparatus or parts thereof except upon written permission of Hawboldt Industries Inc. The acceptance of the print will be construed as an acceptance of the foregoing agreement.

UNLESS OTHERWISE SPECIFIED
DIMENSIONS ARE INCHES
DIMENSIONS IN [ ] ARE MM
-TOLERANCES-

A) ANGULAR		± 1/2°
B) DECIMAL	(ONE) .X	± .06
	(TWO) .XX	± .02
	(THREE) .XXX	± .01
C) FRACTIONAL		
1. GENERAL		± 1/32
2. SAWING, FLAME CUTTING, SHEARING & BREAKING		± 1/16
3. WELDING		± 1/8

HAWBOLDT INDUSTRIES
Chester, Nova Scotia, Canada

MATL CERT N/R	TITLE CCG DUAL WINDLASS		WIRING DIAGRAM
MATL TEST N/R	FIRST USED ON WO		DERIVED FROM
WELD TEST N/R	WO 1988		SHEET 1 OF 7
EST LBS N/A	DRAWN IC	CHECKED YM	APPROVED YM
ACT LBS N/A	DATE 6/23/20	SCALE 1/1	7400427 REV A

REV	DATE	CHANGE NUMBER	AMENDMENTS	BY	APPD

=DUAL WINDLASS+VFD PANEL

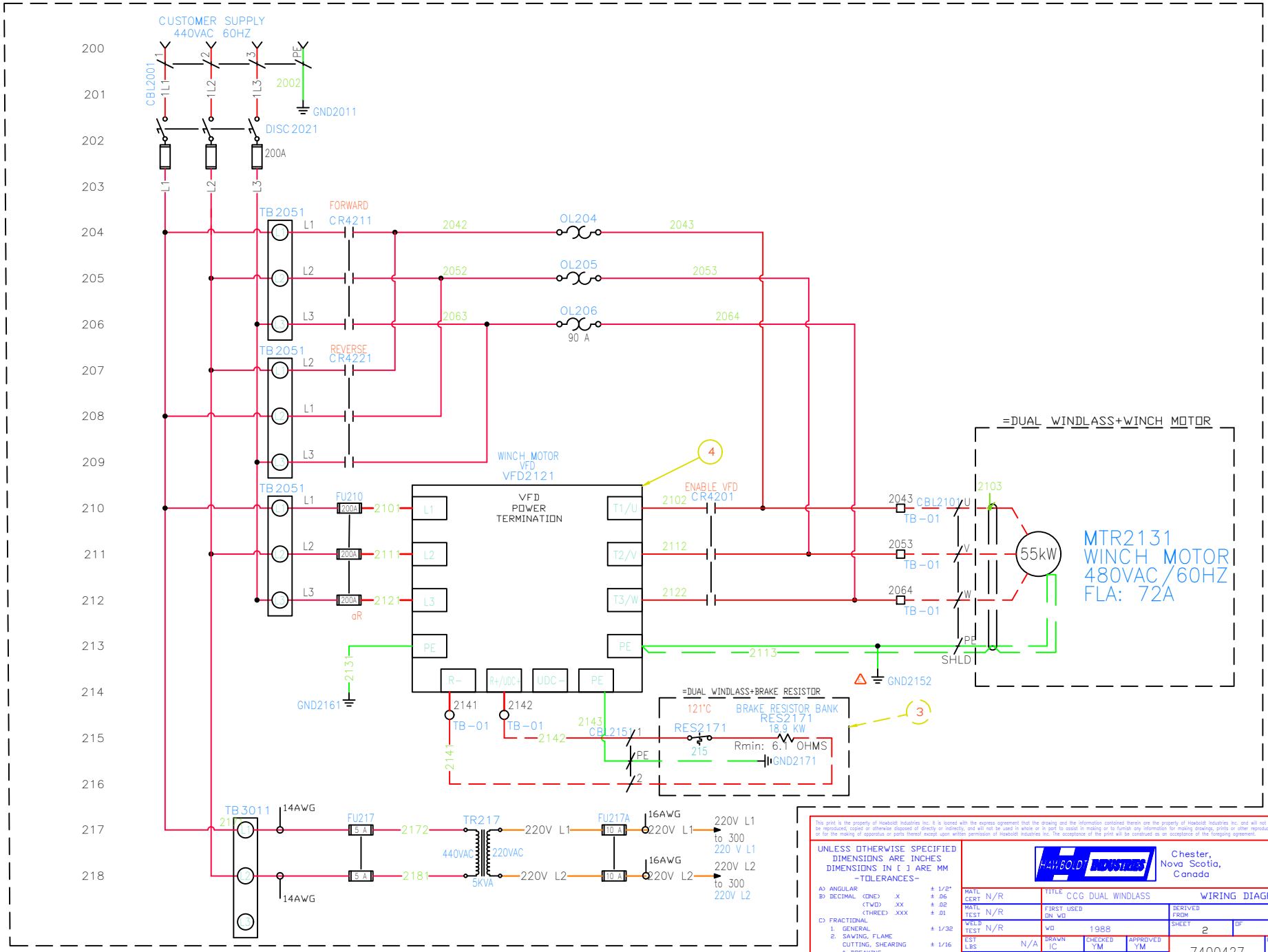

This print is the property of Hawboldt Industries Inc. It is loaned with the express agreement that the drawing and the information contained therein are the property of Hawboldt Industries Inc. and will not be reproduced, copied or otherwise disposed of directly or indirectly, and will not be used in whole or in part to assist in making or to furnish any information for making drawings, prints or other reproductions thereof or for the making of apparatus or parts thereof except upon written permission of Hawboldt Industries Inc. The acceptance of the print will be construed as an acceptance of the foregoing agreement.

UNLESS OTHERWISE SPECIFIED
DIMENSIONS ARE INCHES
DIMENSIONS IN [ ] ARE MM
-TOLERANCES-

A) ANGULAR		± 1/2°
B) DECIMAL	(ONE) .X	± .06
	(TWO) .XX	± .02
	(THREE) .XXX	± .01
C) FRACTIONAL		
1. GENERAL		± 1/32
2. SAWING, FLAME CUTTING, SHEARING & BREAKING		± 1/16
3. WELDING		± 1/8

HAWBOLDT INDUSTRIES
Chester, Nova Scotia, Canada

MATL CERT N/R	TITLE CCG DUAL WINDLASS	WIRING DIAGRAM	
MATL TEST N/R	FIRST USED ON WO	DERIVED FROM	
WELD TEST N/R	WO 1988	SHEET 2	OF 7
EST LBS N/A	DRAWN IC / CHECKED YM / APPROVED YM	7400427	REV A
ACT LBS N/A	DATE 6/23/20	SCALE 1/1	

REV	DATE	CHANGE NUMBER	AMENDMENTS	BY	APPD

=DUAL WINDLASS+VFD PANEL

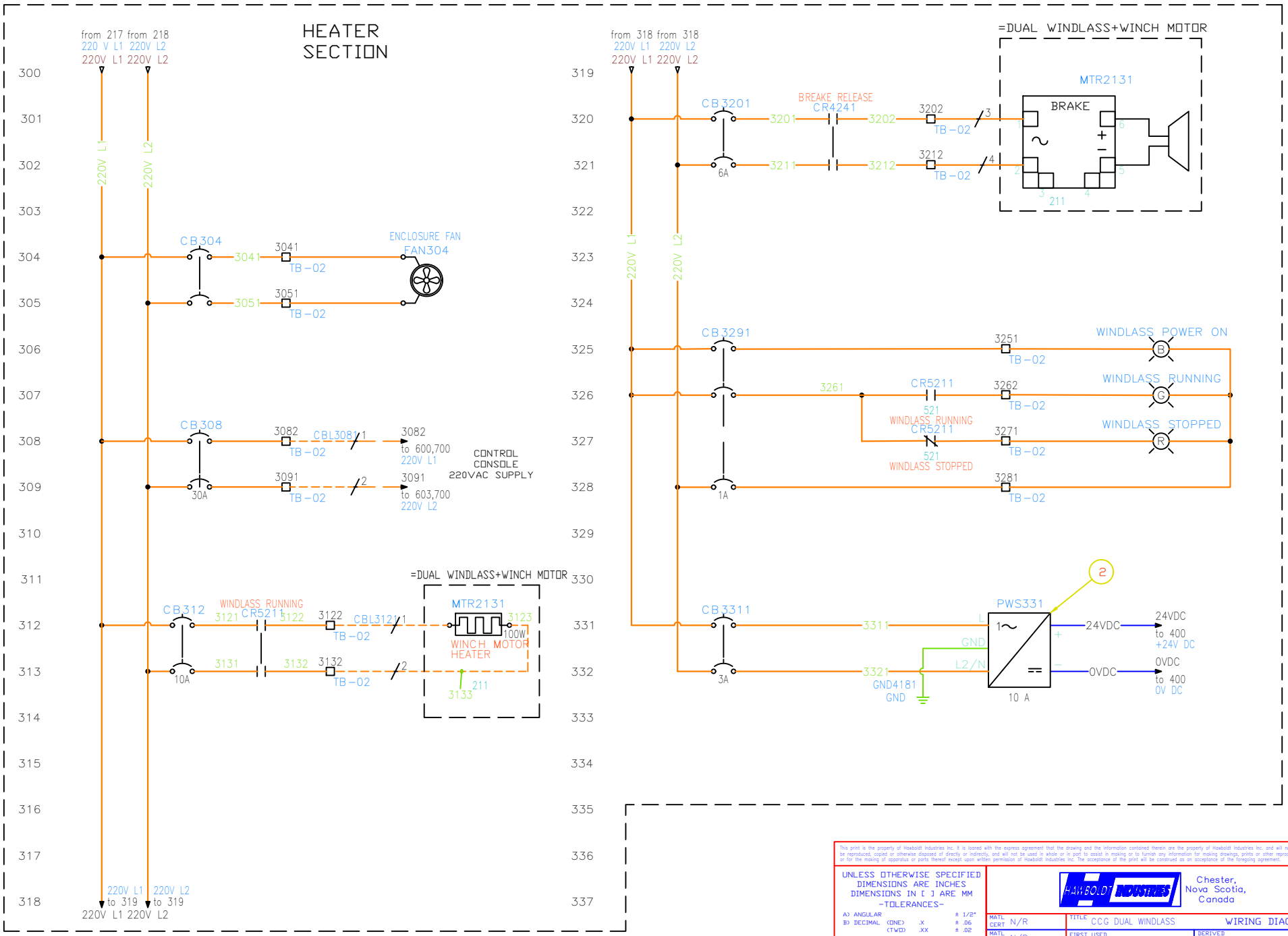

This print is the property of Hawboldt Industries Inc. It is loaned with the express agreement that the drawing and the information contained therein are the property of Hawboldt Industries Inc. and will not be reproduced, copied or otherwise disposed of directly or indirectly, and will not be used in whole or in part to assist in making or to furnish any information for making drawings, prints or other reproductions thereof or for the making of apparatus or parts thereof except upon written permission of Hawboldt Industries Inc. The acceptance of the print will be construed as an acceptance of the foregoing agreement.

UNLESS OTHERWISE SPECIFIED
DIMENSIONS ARE INCHES
DIMENSIONS IN [ ] ARE MM
-TOLERANCES-

A) ANGULAR		± 1/2°
B) DECIMAL	(ONE) .X	± .06
	(TWO) .XX	± .02
	(THREE) .XXX	± .01
C) FRACTIONAL		
1. GENERAL		± 1/32
2. SAWING, FLAME CUTTING, SHEARING & BREAKING		± 1/16
3. WELDING		± 1/8

HAWBOLDT INDUSTRIES
Chester, Nova Scotia, Canada

MATL CERT N/R	TITLE CCG DUAL WINDLASS	WIRING DIAGRAM	
MATL TEST N/R	FIRST USED ON WO	DERIVED FROM	
WELD TEST N/R	WO 1988	SHEET 3	OF 7
EST LBS N/A	DRAWN IC / CHECKED YM / APPROVED YM	7400427	REV A
ACT LBS N/A	DATE 6/23/20	SCALE 1/1	

=DUAL WINDLASS+VFD PANEL

REV	DATE	CHANGE NUMBER	AMENDMENTS	BY	APPD

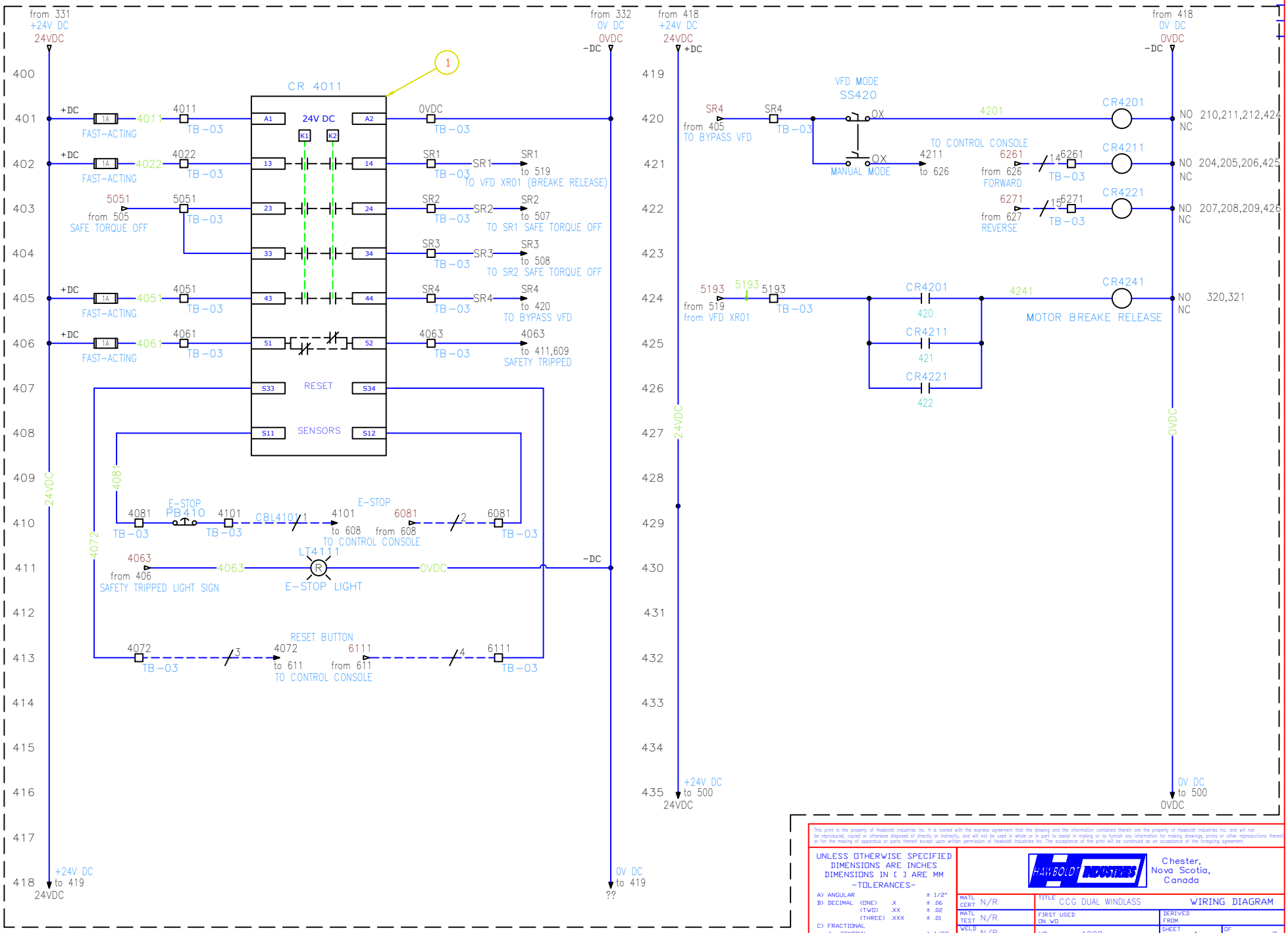

This print is the property of Hawboldt Industries Inc. It is loaned with the express agreement that the drawing and the information contained therein are the property of Hawboldt Industries Inc. and will not be reproduced, copied or otherwise disposed of directly or indirectly, and will not be used in whole or in part to assist in making or to furnish any information for making drawings, prints or other reproductions thereof or for the making of apparatus or parts thereof except upon written permission of Hawboldt Industries Inc. The acceptance of the print will be construed as an acceptance of the foregoing agreement.

UNLESS OTHERWISE SPECIFIED
DIMENSIONS ARE INCHES
DIMENSIONS IN [ ] ARE MM
-TOLERANCES-

A) ANGULAR		± 1/2°
B) DECIMAL	(ONE) .X	± .06
	(TWO) .XX	± .02
	(THREE) .XXX	± .01
C) FRACTIONAL		
1. GENERAL		± 1/32
2. SAWING, FLAME CUTTING, SHEARING & BREAKING		± 1/16
3. WELDING		± 1/8

HAWBOLDT INDUSTRIES
Chester, Nova Scotia, Canada

MATL CERT N/R	TITLE CCG DUAL WINDLASS	WIRING DIAGRAM	
MATL TEST N/R	FIRST USED ON WO	DERIVED FROM	
WELD TEST N/R	WO 1988	SHEET 4	OF 7
EST LBS N/A	DRAWN IC / CHECKED YM / APPROVED YM	7400427	REV A
ACT LBS N/A	DATE 6/23/20 / SCALE 1/1		

REV	DATE	CHANGE NUMBER	AMENDMENTS	BY	APPD

=DUAL WINDLASS+VFD PANEL

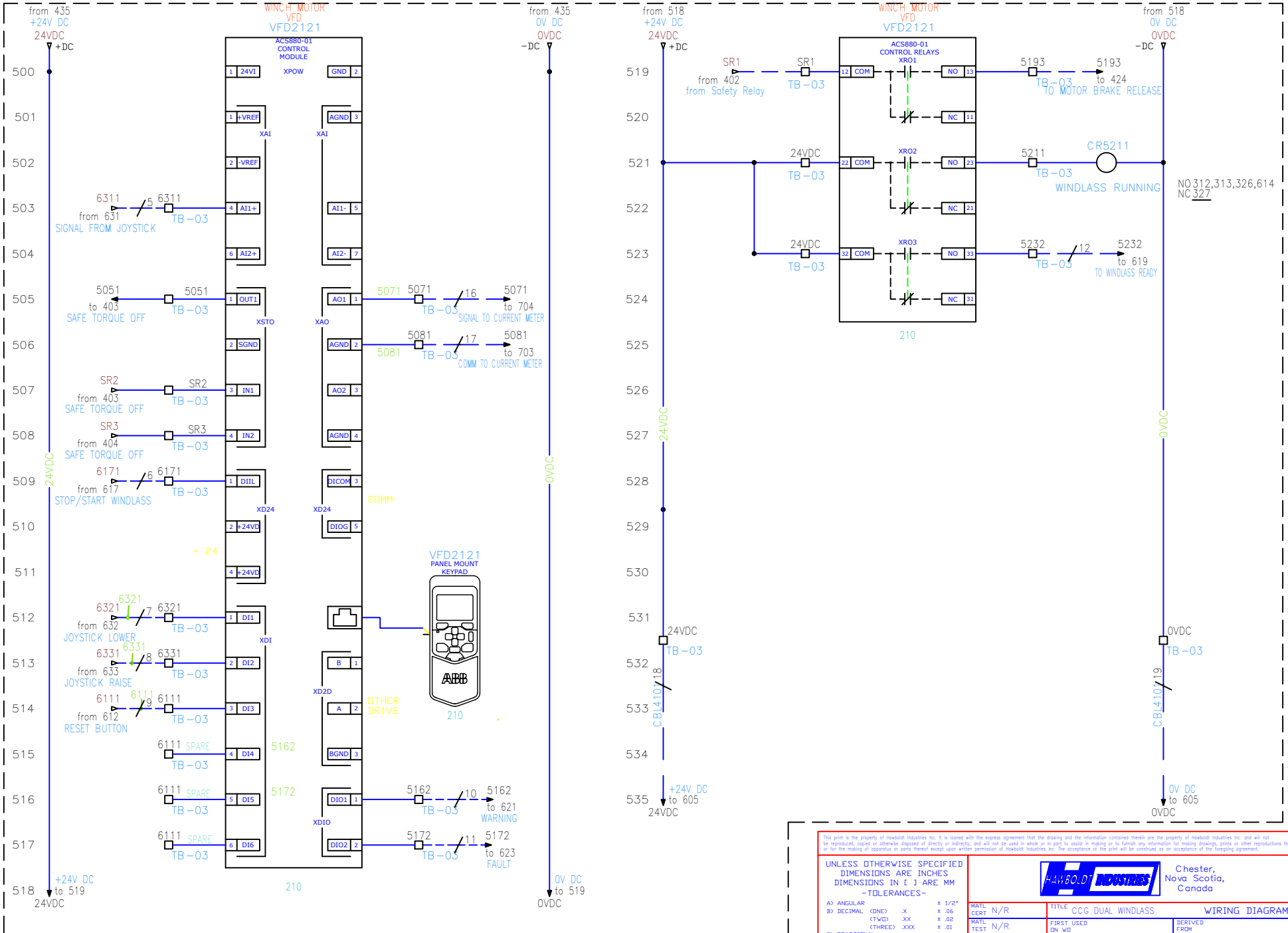

This print is the property of Hawboldt Industries Inc. It is loaned with the express agreement that the drawing and the information contained therein are the property of Hawboldt Industries Inc. and will not be reproduced, copied or otherwise disposed of directly or indirectly, and will not be used in whole or in part to assist in making or to furnish any information for making drawings, prints or other reproductions thereof or for the making of apparatus or parts thereof, except upon written permission of Hawboldt Industries Inc. The acceptance of the print will be construed as an acceptance of the foregoing agreement.

UNLESS OTHERWISE SPECIFIED
DIMENSIONS ARE INCHES
DIMENSIONS IN [ ] ARE MM
-TOLERANCES-

A) ANGULAR		± 1/2°
B) DECIMAL	(ONE) .X	± .06
	(TWO) .XX	± .02
	(THREE) .XXX	± .01
C) FRACTIONAL		
1. GENERAL		± 1/32
2. SAWING, FLAME CUTTING, SHEARING & BREAKING		± 1/16
3. WELDING		± 1/8

HAWBOLDT INDUSTRIES
Chester, Nova Scotia, Canada

MATL CERT N/R	TITLE CCG DUAL WINDLASS		WIRING DIAGRAM
MATL TEST N/R	FIRST USED ON WO		DERIVED FROM
WELD TEST N/R	WO 1988	SHEET 5	OF 7
EST LBS N/A	DRAWN JC / CHECKED YM / APPROVED YM	7400427	REV A
ACT LBS N/A	DATE 6/23/20 / SCALE 1/1		

REV	DATE	CHANGE NUMBER	AMENDMENTS	BY	APPD

=DUAL WINDLASS+CONTROL CONSOLE

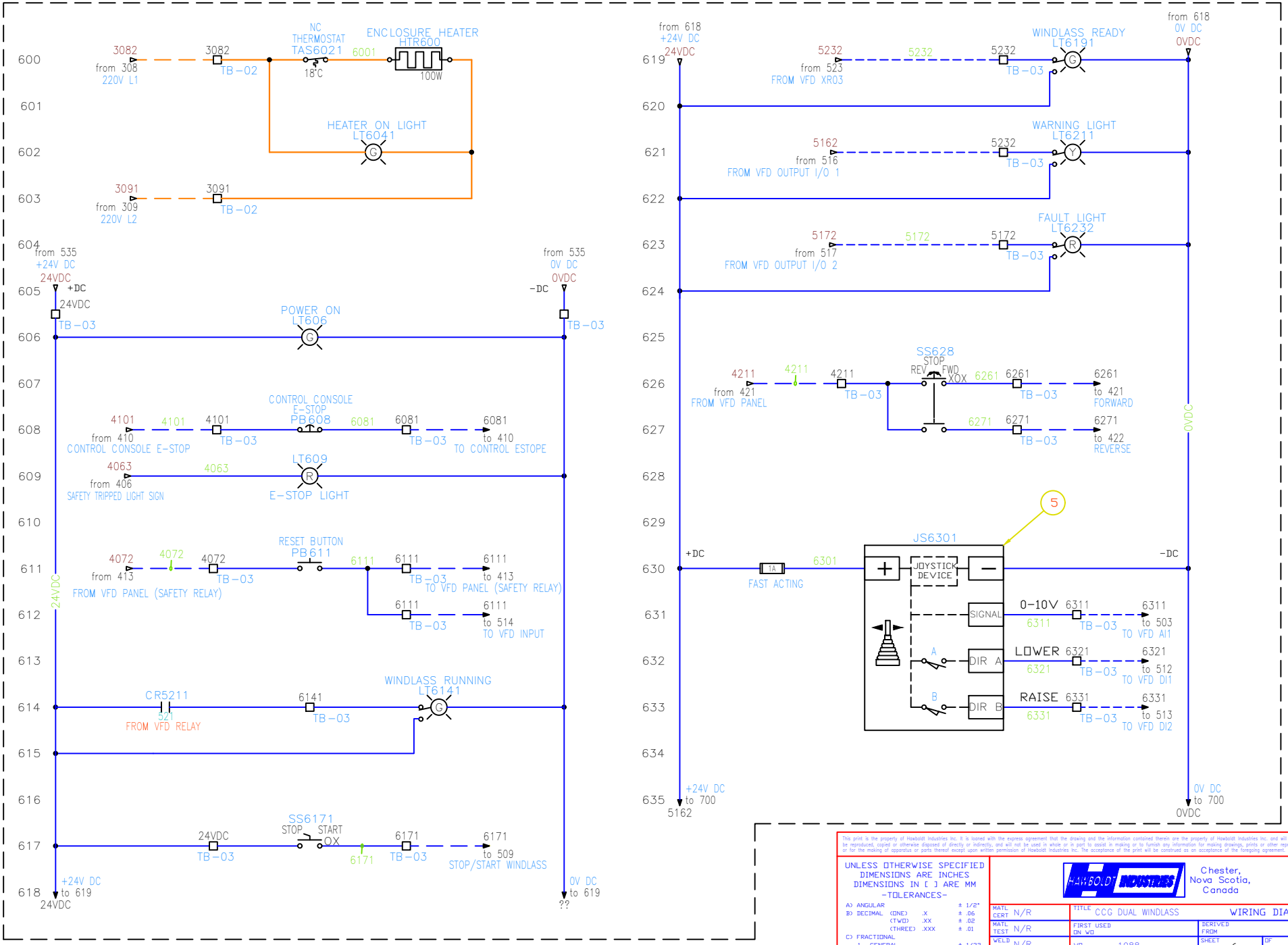

This print is the property of Hawboldt Industries Inc. It is loaned with the express agreement that the drawing and the information contained therein are the property of Hawboldt Industries Inc. and will not be reproduced, copied or otherwise disposed of directly or indirectly, and will not be used in whole or in part to assist in making or to furnish any information for making drawings, prints or other reproductions thereof or for the making of apparatus or parts thereof except upon written permission of Hawboldt Industries Inc. The acceptance of the print will be construed as an acceptance of the foregoing agreement.

UNLESS OTHERWISE SPECIFIED
DIMENSIONS ARE INCHES
DIMENSIONS IN [ ] ARE MM
-TOLERANCES-

A) ANGULAR		± 1/2°
B) DECIMAL (ONE)	.X	± .06
(TWO)	.XX	± .02
(THREE)	.XXX	± .01
C) FRACTIONAL		
1. GENERAL		± 1/32
2. SAWING, FLAME CUTTING, SHEARING & BREAKING		± 1/16
3. WELDING		± 1/8

HAWBOLDT INDUSTRIES
Chester, Nova Scotia, Canada

MATL CERT N/R	TITLE CCG DUAL WINDLASS		WIRING DIAGRAM
MATL TEST N/R	FIRST USED ON WO		DERIVED FROM
WELD TEST N/R	WO 1988	SHEET 6	OF 7
EST LBS N/A	DRAWN IC / CHECKED YM / APPROVED YM	7400427	REV A
ACT LBS N/A	DATE 6/23/20 / SCALE 1/1		

REV	DATE	CHANGE NUMBER	AMENDMENTS	BY	APPD

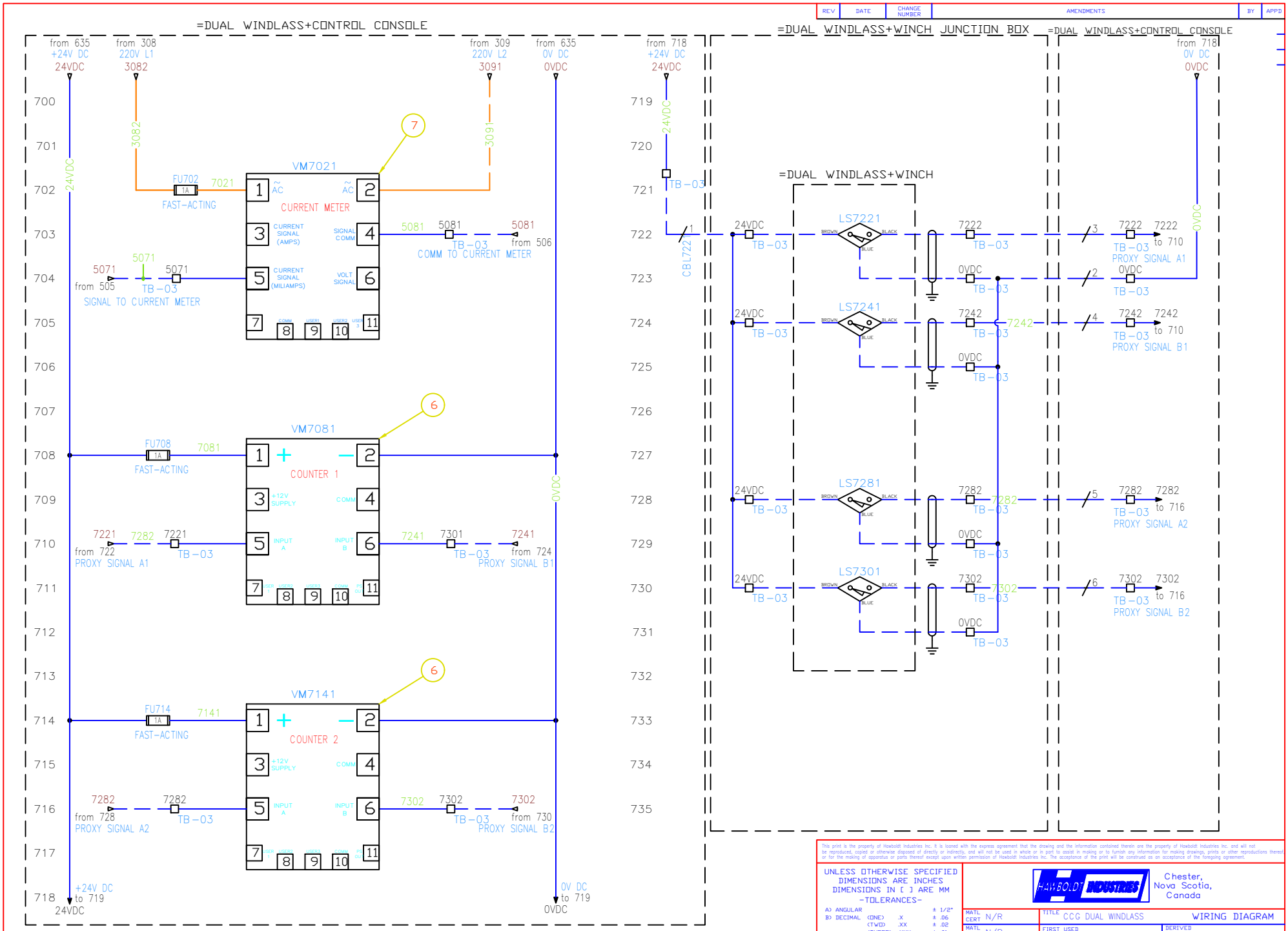

This print is the property of Hawboldt Industries Inc. It is loaned with the express agreement that the drawing and the information contained therein are the property of Hawboldt Industries Inc. and will not be reproduced, copied or otherwise disposed of directly or indirectly, and will not be used in whole or in part to assist in making or to furnish any information for making drawings, prints or other reproductions thereof or for the making of apparatus or parts thereof except upon written permission of Hawboldt Industries Inc. The acceptance of the print will be construed as an acceptance of the foregoing agreement.

UNLESS OTHERWISE SPECIFIED DIMENSIONS ARE INCHES
DIMENSIONS IN [ ] ARE MM
-TOLERANCES-

A) ANGULAR		± 1/2°
B) DECIMAL	(ONE) .X	± .06
	(TWO) .XX	± .02
	(THREE) .XXX	± .01
C) FRACTIONAL		
1. GENERAL		± 1/32
2. SAWING, FLAME CUTTING, SHEARING & BREAKING		± 1/16
3. WELDING		± 1/8

HAWBOLDT INDUSTRIES
Chester, Nova Scotia, Canada

MATL CERT N/R	TITLE CCG DUAL WINDLASS	WIRING DIAGRAM	
MATL TEST N/R	FIRST USED ON WO	DERIVED FROM	
WELD TEST N/R	WO 1988	SHEET 7	OF 7
EST LBS N/A	DRAWN IC / CHECKED YM / APPROVED YM	7400427	REV A
ACT LBS N/A	DATE 6/23/20 / SCALE 1/1		

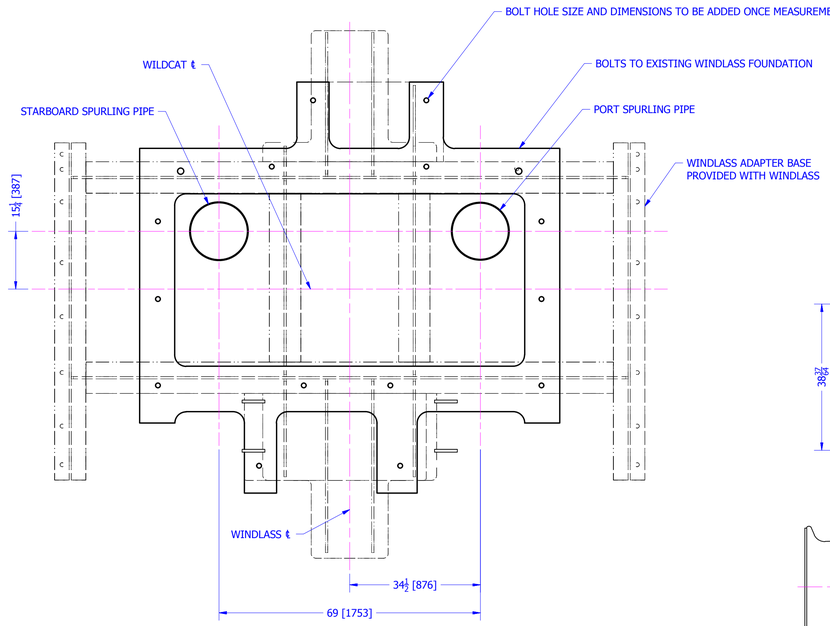

WINDLASS BASE
SCALE 1/20

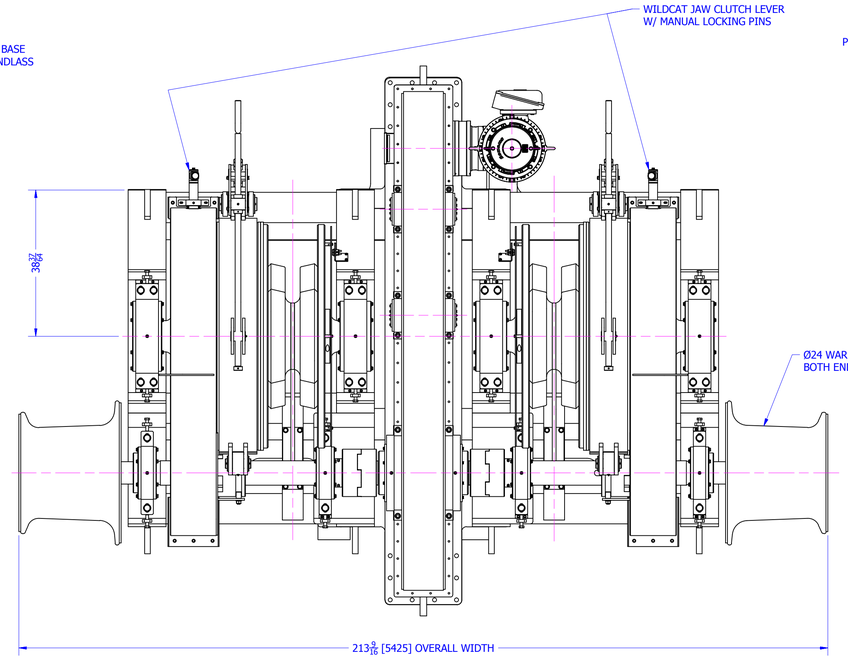

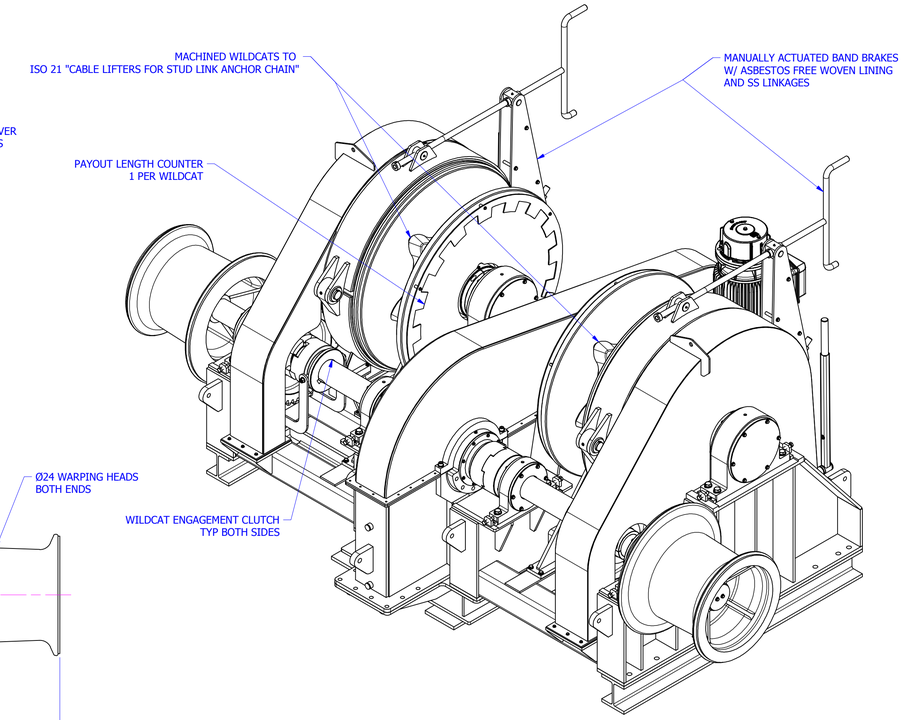

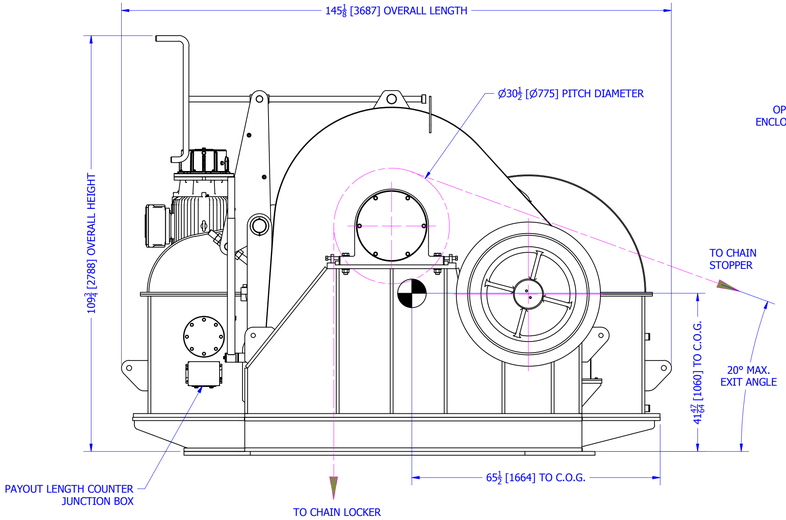

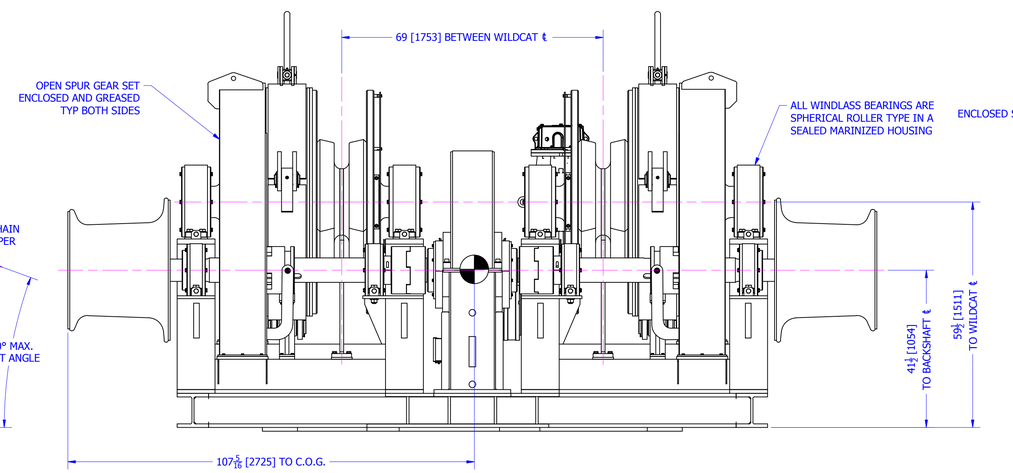

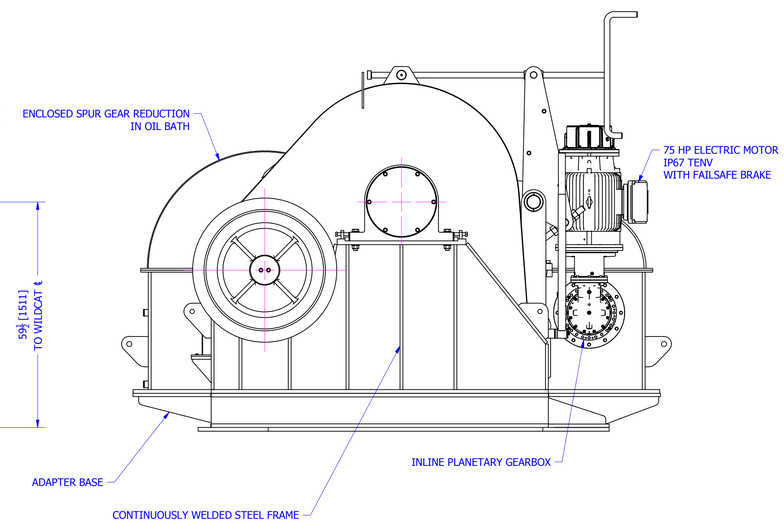

WINDLASS SPECIFICATIONS

DESIGNED FOR 2-3/8" STUD LINK ANCHOR CHAIN, GRADE U3
MAXIMUM ANCHORING DEPTH = 175m

NOMINAL WINDLASS LINEPULL = 60,000 LBS
NOMINAL WINDLASS LINESPEED = 30 FPM

CAPABLE OF 150% OVERPULL FOR 2 MINUTES

CONTINUOUS WARPING HEAD LINEPULL = 12,000 LBS
CONTINUOUS WARPING HEAD LINESPEED = 25 FPM, ASSUMING 2" ROPE

BRAKE HOLD CAPACITY = 45% OF CHAIN BREAKING STRENGTH = 282,600 LBS

REQUIRED ELECTRICAL SUPPLY = 440VAC/3PH/60HZ

ESTIMATED WEIGHT = 58,000 LBS

DESIGNED, BUILT, AND CERTIFIED TO ABS MARINE VESSEL RULES (2020), PART 4, CHAPTER 5, SECTION 1 "ANCHOR WINDLASS"

This print is the property of Hawboldt Industries Inc. It is loaned with the express agreement that the drawing and the information contained therein are the property of Hawboldt Industries Inc. and will not be reproduced, copied or otherwise disposed of directly or indirectly, and will not be used in whole or in part to assist in making or to furnish any information for making drawings, prints or other reproductions thereof, or for the making of apparatus or parts thereof except upon written permission of Hawboldt Industries Inc. The acceptance of the print will be construed as an acceptance of the foregoing agreement.

STANDARD TOLERANCE
UNLESS OTHERWISE SPECIFIED
ALL DIMENSIONS ARE IN INCHES
DIMENSIONS IN [ ] ARE IN MM

HAWBOLDT INDUSTRIES (1989) LIMITED
P.O. Box 80, Chester, Nova Scotia, Canada, B0J 1J0
Tel: (902) 275-3591 Fax: (902) 275-5014
www.hawboldt.ca

WHOLE NUMBER ± 1/16	2 PLC. DECIMAL ± .01	MATL CERT	TITLE	GENERAL ARRGT. - AW60-2-75E ANCHOR WINDLASS	
FRACTIONAL ± 1/16	3 PLC. DECIMAL ± .005	MATL TEST	NEXT ASSEMBLY	F400988	DERIVED FROM 34-00088-000
ANGLES ± 1/2°	4 PLC. DECIMAL ± .0005				
BREAK ALL SHARP CORNERS AND EDGES		WELD TEST	FIRST USED ON WO	1988	SHEET 1 OF 1
FINISH ON MACHINED SURFACES 125		EST LBS N/A	DRAWN PMV	CHECKED DHM	APPROVED PMV
		ACT LBS	DATE 10-Apr-20	SCALE 1/20	34-00322-000 REV

Proprietary and confidential: information contained in this drawing is the sole property of MegaResistors. Reproduction without explicit and written permission by MegaResistors is prohibited.

#	DESCRIPTION	QTY
1	ENCLOSURE, DB18-3, NEMA 3R, GALV. STEEL	1
2	ELEMENT, EDGEWOUND, 3P, REEL=15A-S5, 3.20 Ω	18
3	TERMINAL BLOCK, TETB=115	1
4	THERMAL SWITCH, NORMALLY CLOSED	1

NORMALLY CLOSED THERMAL SWITCH
OPEN 250°F (121°C)
0.25 X 0.32 SPADE QUICK CONNECT
MATES WITH AMP OR EQUAL

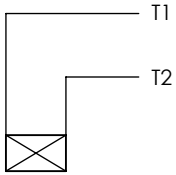

R1 - R2 = 6.13 Ω -0%/+10% AT 20°C

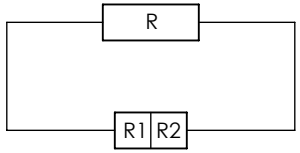

TERMINAL BLOCK, 2 POLE
600V, 115 AMPS
FLAT HEAD SCREW
WIRE RANGE WITH BINDING SCREW #14 - #2 AWG, Cu

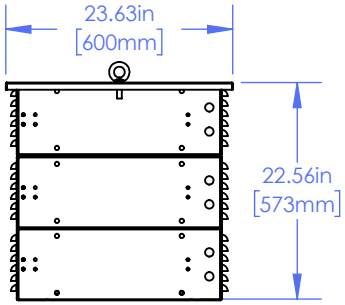

SIDE VIEW

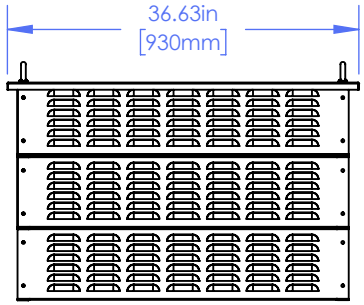

FRONT VIEW

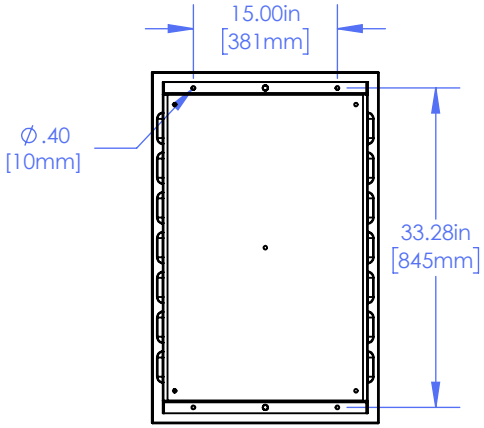

BOTTOM VIEW
(MOUNTING DIMENSIONS)

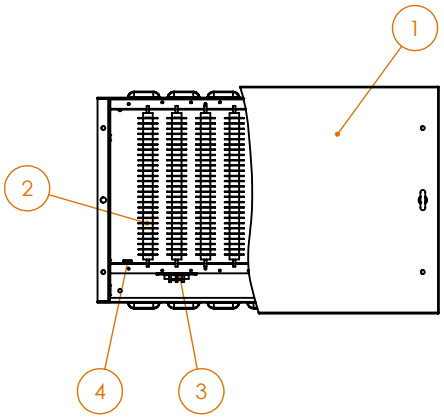

TOP VIEW

APPROVED
Ivan Cruz
23/Jun/2020
8:41 am

MegaResistors Product Drawing

Product Line	DBR	**Drawing Type**	Mechanical
Part Number	620945	**Drawing Status**	Production

Revision #	0	**Drawing #**	620945
Revision Date	May 19, 2020	**Drawn By**	C.F.
Approval Date	May 19, 2020	**Approved By**	G.C.

Units	in [mm]	**Power**	18900 W	**Class**	600 V
Scale	1:20	**Resistance**	6.13 Ω	**Env Rating**	Type 3R
Size	A	**Duty Cycle**	Continuous	**Weight**	132 lb

Notes
Enclosure Material: 16GA Galv. Steel
Painted: ANSI 61 Gray
One-second Power: 450 kW

Proprietary and confidential: information contained in this drawing is the sole property of MegaResistors. Reproduction without explicit and written permission by MegaResistors is prohibited.

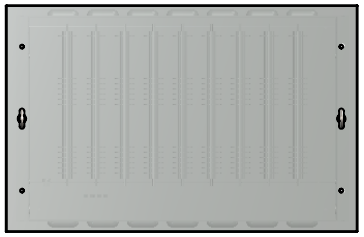

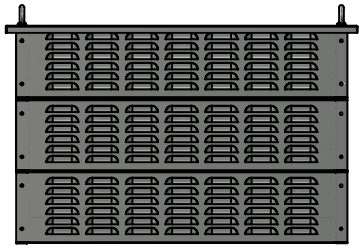

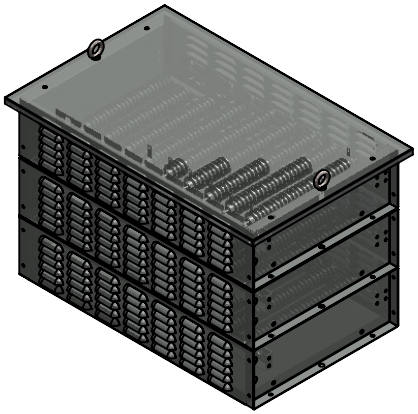

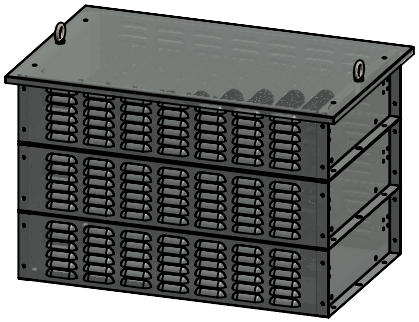

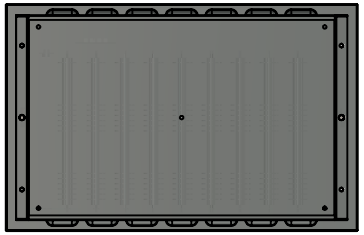

MegaResistors

Product Drawing

Revision #	0	**Drawing #**	620945
Revision Date	May 19, 2020	**Drawn By**	C.F.
Approval Date	May 19, 2020	**Approved By**	G.C.

Product Line	DBR	**Drawing Type**	Mechanical
Part Number	620945	**Drawing Status**	Production

Units	in [mm]	**Power**	18900 W	**Class**	600 V
Scale	1:20	**Resistance**	6.13 Ω	**Env Rating**	Type 3R
Size	A	**Duty Cycle**	Continuous	**Weight**	132 lb

Notes

Enclosure Material: 16GA Galv. Steel
Painted: ANSI 61 Gray
One-second Power: 450 kW