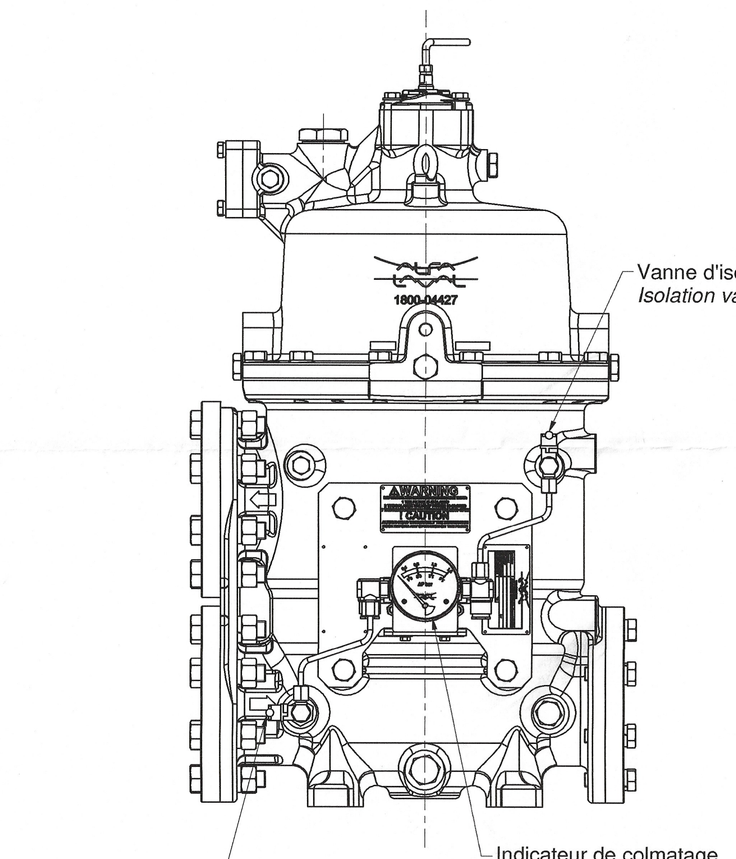

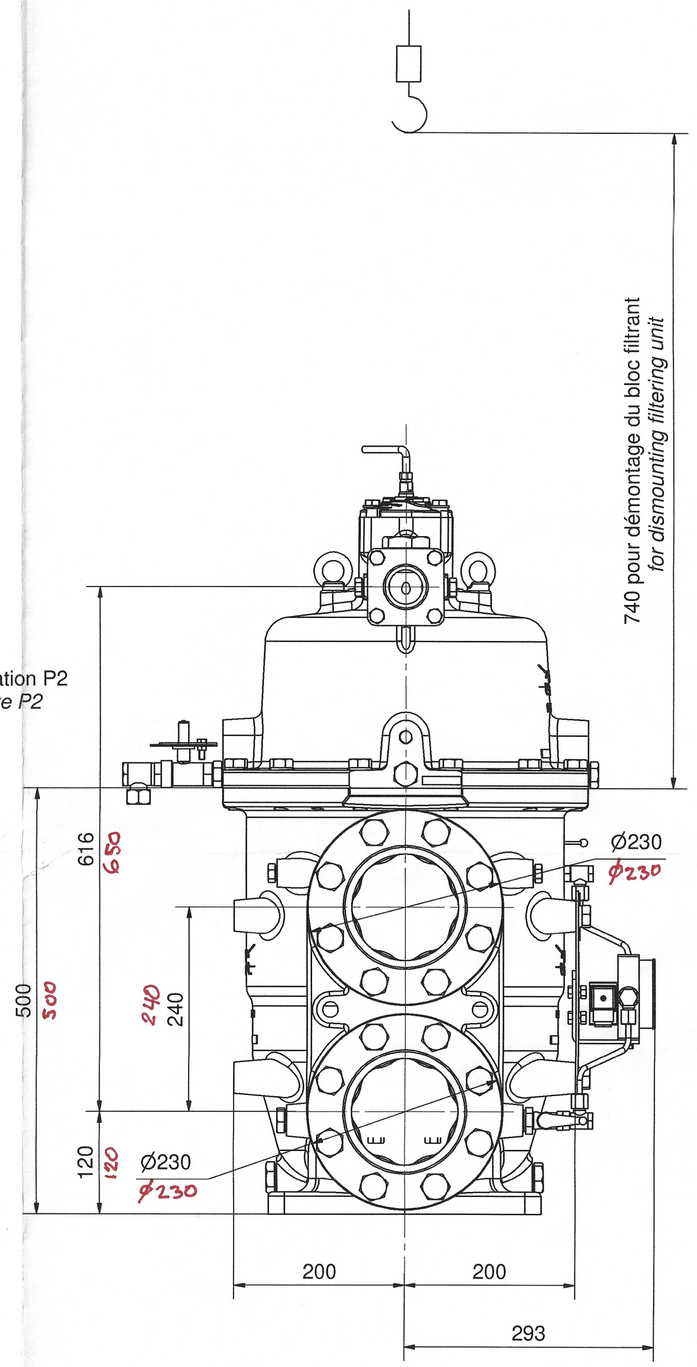

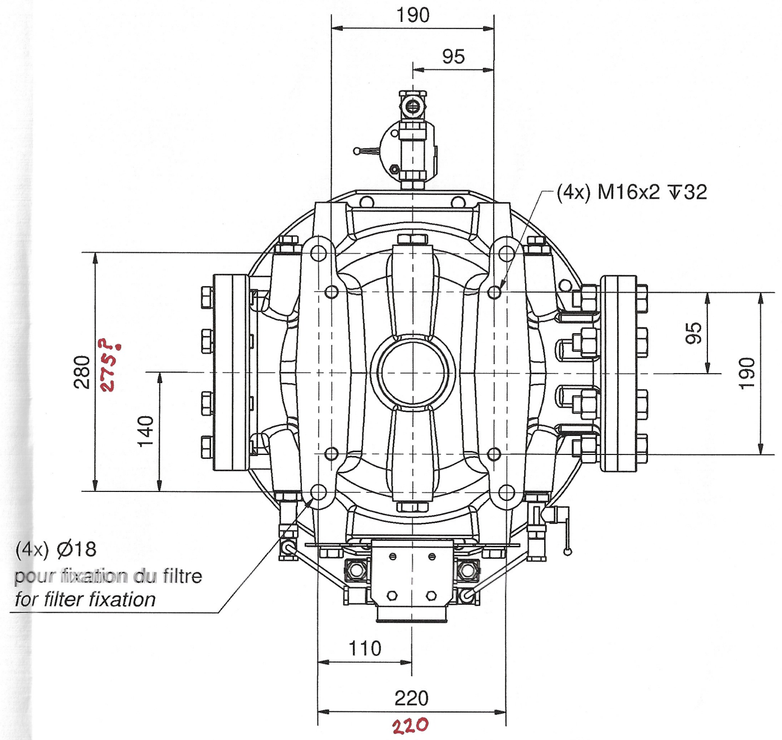

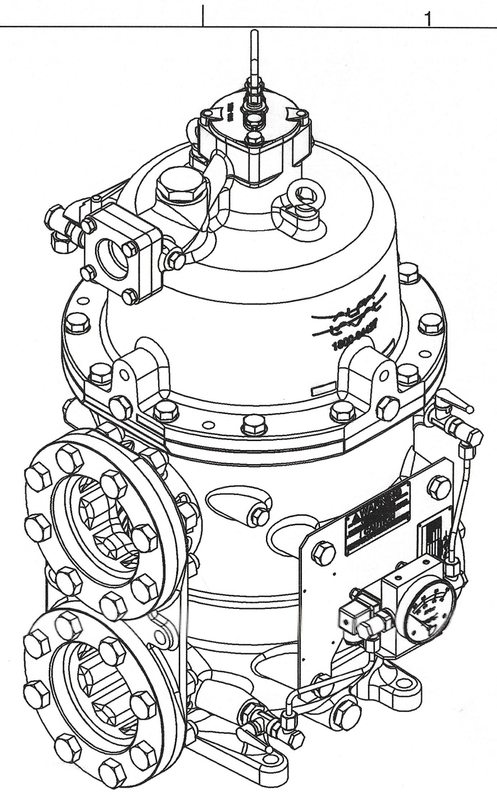

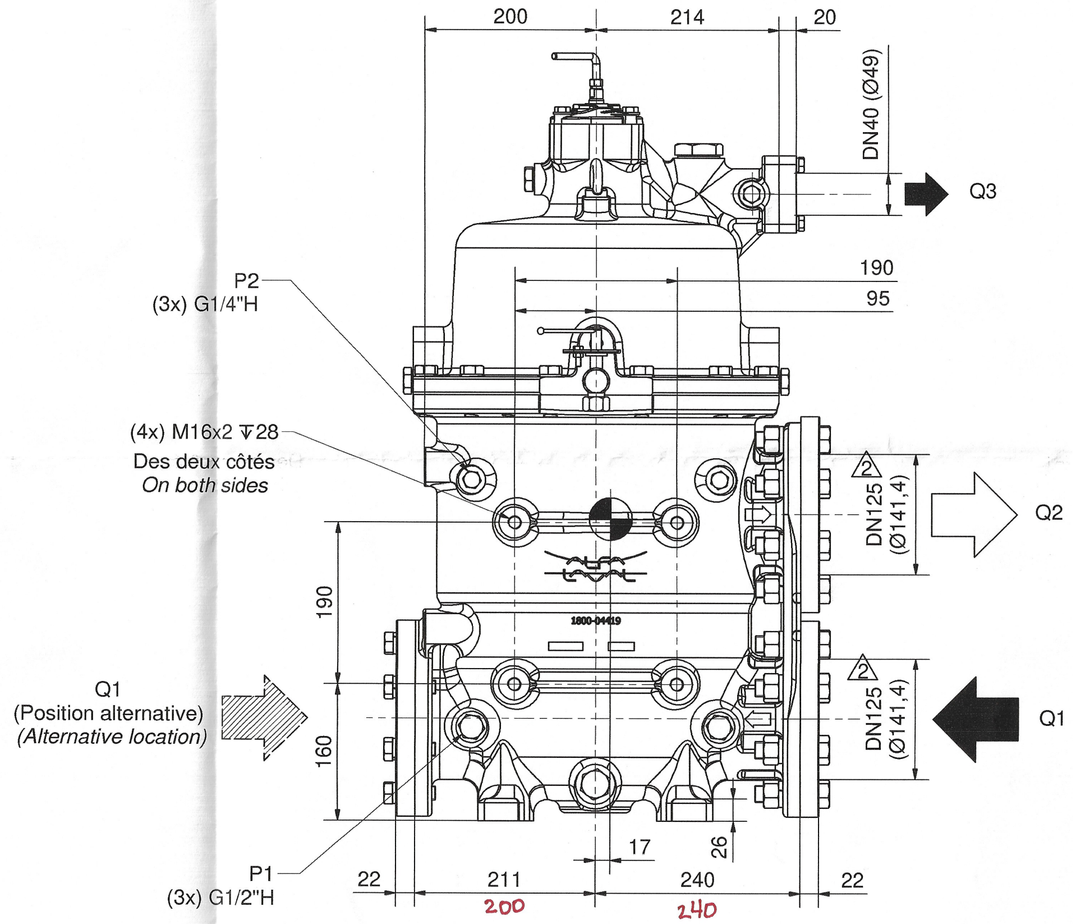

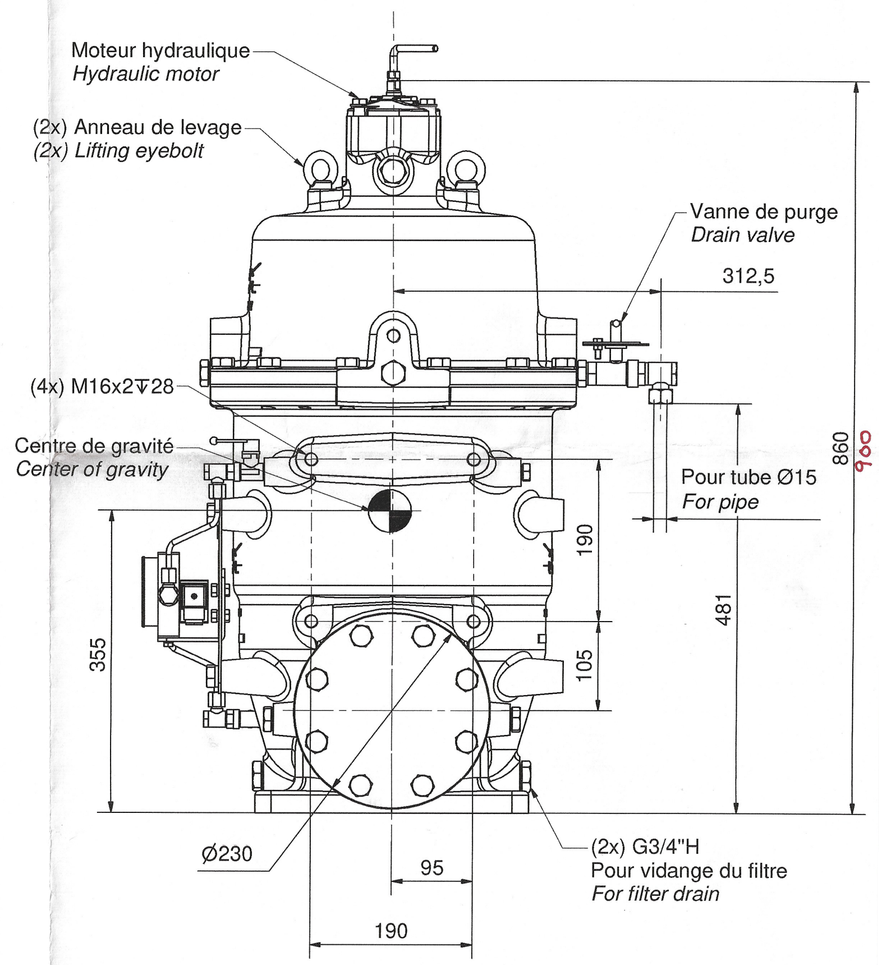

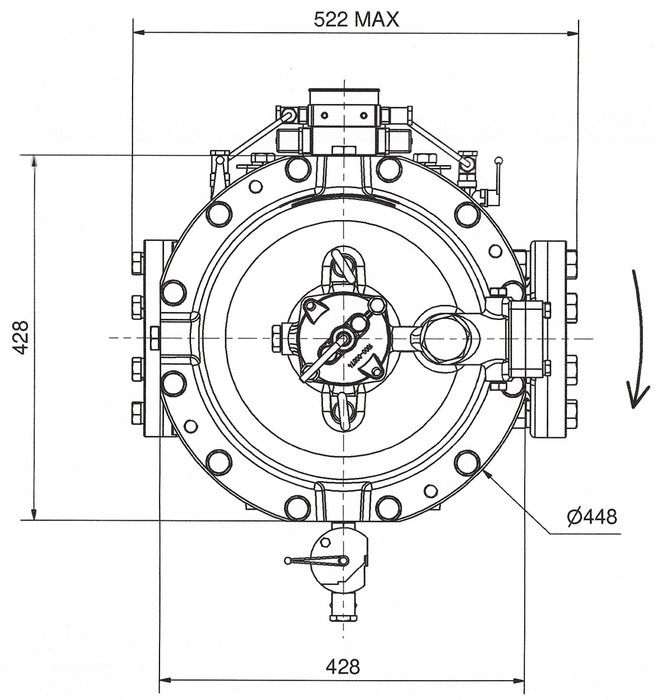

Tête de filtre orientable (Pas de 90°)
Filter head orientable (90° increments)

Volume d'huile: 55 l
Volume of oil: 55 l

Poids à vide: 186 kg
Empty weight: 186 kg

Dénominations :

Q1 : Débit entrée huile non filtrée
Q2 : Débit sortie huile filtrée
Q3 : Débit retour carter

P1 : Pression d'entrée filtre
P2 : Pression de sortie filtre
P3 : Contre pression de retour rinçage

Denominations :

Q1 : Lube oil inlet flow
Q2 : Lube oil outlet flow
Q3 : Return port flow

P1 : Filter inlet pressure
P2 : Filter outlet pressure
P3 : Counter pressure in return port

Dimensions in mm when not otherwise stated

Rev No.	Date	Drawn	Check	Appr.
2	26/10/2018	BLN	SBK	ANE
1	13/10/2017	BLN	LPT	GEY

Assembly No.

Qty	Item	Article No.	Name / Designation	Material (final condition)

Title

Filtre huile 290D20
290D20 oil filter
290D filter

Type of Document : Plan d'encombrement / Dimensionned drawing

First angle Projection Method ISO E

Scale	Format	Drawn	Check	Appr.	Sheet No.	No. of sheets	Revision No.
1 : 5	A1	LPT	RCT	GEY	1	1	2
Project No. PROJ0170		29/03/2017	29/03/2017	29/03/2017	Document No. 1801179-01		

ALFA LAVAL MOATTI SAS
ELANCOURT - FRANCE

This document and its contents are the exclusive property of Alfa Laval Moatti SAS, and may not be copied, reproduced, transmitted or communicated to a third party, nor used for any purpose without written permission.

Only to the extent expressly agreed by us this document may constitute a contractual obligation on our part.