COMPUTERIZED DRAWING – DO NOT SCALE

REPORT ANY ERRORS OR OMISSIONS TO DRAFTING OFFICE

TRANSPORT CANADA
COAST GUARD MARITIMES

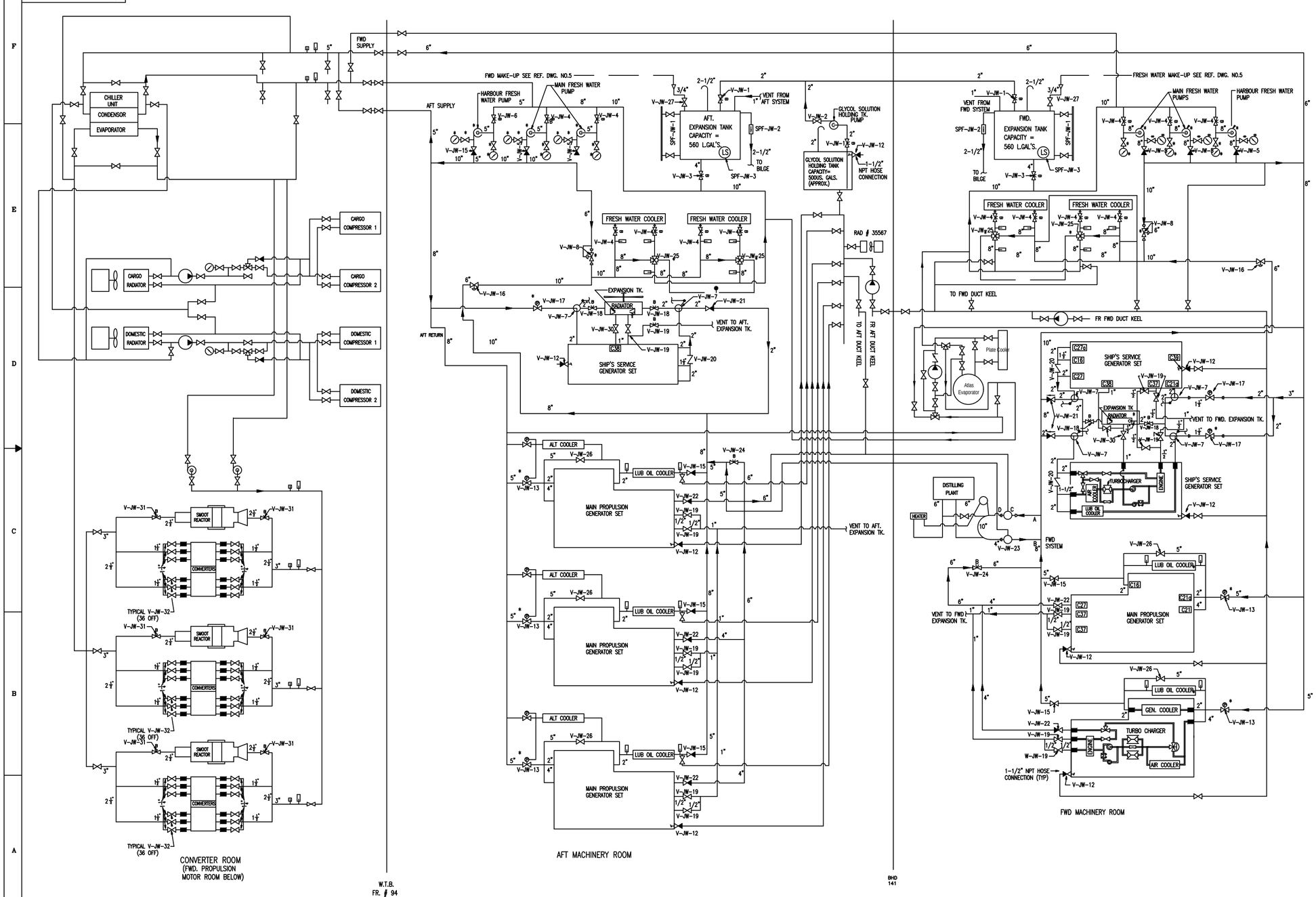

1. ALL PIPING ,VALVES AND FITTINGS SHALL BE IN ACCD. WITH C.C.G. STD. 03 AND OWNER AGREED EXCEPTIONS.
2. ALL PIPE SIZES ARE NOMINAL, AND DIMENSIONS ARE IN INCHES.
3. ALL VALVES ARE NORMALLY OPEN UNLESS OTHERWISE INDICATED.
4. ITEMS MARKED THUS * ARE SUPPLIED WITH EQUIPMENT.
5. 1-1/2" NPT. HOSE CONNECTIONS SUPPLIED FOR TRANSFER OF JACKET WATER TO GLYCOL SOLUTION HOLDING TANK IN THE EVENT A DIESEL ENGINE REQUIRES ISOLATION AND SERVICING. HOSE CONNECTIONS TO BE INSTALLED AT LOW POINT IN JACKET WATER PIPING OF DIESEL ENGINES. 120 FT. OF 1-1/2" DIA. HOSE AND PORTABLE HANDPUMP TO BE SUPPLIED.
6. THE SYSTEM TEST PROCEDURE SHALL BE IN ACCORDANCE WITH THE SPECIFICATION OF THE MODERNIZED VESSEL.
7. C21 TYPICAL MoK CONNECTING POINT CODE.
8. ALL PIPELINES SHOWN ON THIS DIAGRAM ARE NEW.

MATERIAL SPECIFICATION

PIPE

SYSTEM	WP/TP	SIZE	MATERIAL	CONN.	GASKET
FRESH WATER COOLING CIRC. PIPING	SEE NOTE 6	ALL	SEAMLESS BLACK STEEL ASTM-A53 SCH. 40	FLANGED	SYN. RUBBER

VALVES

SYSTEM	TYPE	SIZE	BODY	TRIM	BONNET	CONN.
FRESH WATER COOLING CIRC. PIPING	BUTTERFLY	ALL	DUCTILE IRN. CAST STL.	ST. STL	BOLTED	LUGGED
	ALL OTHERS	ALL	CAST STL.	ST. STL	BOLTED	FLG./SCR.

PUMP DATA

PUMP	NO. OF SET	TYPE	NO.OF SPEEDS	CAPACITY	TOTAL HEAD	MANUFACTURER
GLYCOL SOLUTION HOLDING TANK PUMP	1	CENTRIFUGAL	1	10 I.G.P.M.	80 FT.	T.B.D.
MAIN FRESH WATER FWD.	2		1	1833 I.G.P.M.	100 FT.	M.A.K. SUPPLY
MAIN FRESH WATER AFT.	2		1	1833 I.G.P.M.	100 FT.	
HARBOUR FRESH WATER	2		1	367 I.G.P.M.	100 FT.	

LAST NUMBER USED TABLE

LAST VALVE NO. USED	V-JW-33	
LAST FITTING NO. USED		
VALVE & FITTING NO. NOT USED		

6	6005-419-001	DIAGRAMMATIC ARRGT. OF SALT WATER COOLING SYSTEM
5	6005-413-001	DIAGRAMMATIC ARRGT. OF DOMESTIC F.W. SYSTEM
4	4-A-9148	M.A.K. HEAT BALANCE
3	6005-500-000	STANDARD SYMBOLS
2	6005-401-001	DIAGRAMMATIC ARRGT.OF BILGE AND BALLAST SYSTEM.
1.	CDN. VICKERS NO. MA-286-163	DIAGRAMMATIC ARRGT. OF S.W. CIRC. IN FORWARD AND AFT MOTOR ROOMS.

NO.	LOC	REVISION	DATE	BY	APPROVED
A		ORIGINAL ISSUE	MAY/03/95	GD	

TRANSPORT CANADA
COAST GUARD MARITIMES

VESSEL NAVIRE: C.C.G.S. LOUIS .S ST. LAURENT

DIAGRAMMATIC ARRANGEMENT OF FRESH WATER COOLING SYSTEM

DATE	DRAWN BY	CHECKED	APPROVED
MAY.03/95	GHYSLAINE DESMARAIS		

SCALE	REFERENCE	DRAWING NO.	Sheet
NTS	6005-422-001	722-01	1/2