NOTES:
1. ALL DIMENSIONS IN mm UNLESS OTHERWISE NOTED.
2. WELDING AND FITUP:
   - REF. FIELD WPS SM-FC-11-0001 (BUTT WELDS) & SM-FC-11-9002 (FLANGE JOINTS & SOCKET WELDS).
   - ALL EDGES OF SURFACES OR PARTS TO BE JOINED BY WELDING SHALL BE CLEANED OF ALL GALVANIZING MATERIAL PRIOR TO WELDING.
3. COATINGS AND SURFACE PREPARATION:
   - FOR ALL REPAIRS TO GALVANIZING DONE ONSITE, USE METAFLUX 70-43 ZINC SHEEN SPRAY OR APPROVED EQUIVALENT. FOLLOW ALL MANUFACTURERS RECOMMENDATIONS WRT SURFACE PREP AND APPLICATION.
4. MECHANICAL JOINTS LABELED AS J-# SEQUENTIALLY.
5. WHERE FIELD WELD (FW) IS INDICATED ADJACENT FITTING IS SHIPPED LOOSE FOR FITUP ON SITE. WHERE FIELD FIT WELD (FFW) INDICATED ADJACENT FITTING IS SHIPPED LOOSE AND ADJACENT PIPE LENGTH IS +100mm LONGER THAN DESIGN LENGTH TO ALLOW FOR FITUP ON SITE.
6. REFER TO THE MANUFACTURE'S (HAMWORTHY) MANUAL NoSUSU4674-001 No. SUS= 03396-007 FOR ADDITIONAL INFORMATION.
7. PUMPS ARE SUPPLIED WITH BSP CONNECTIONS, ADAPTER FITTINGS FROM BSP TO NPT SUPPLIED FOR FUTURE BY YARD.
8. LOOSE FLANGE TO BE WELDED TO EXISTING PIPE FOR NEW TIE-IN SPOOL, FLANGE JOINT TO BE TOUCH UP PAINTED OR COLD GALVANIZING SPRAY.
9. ONCE PUMP IS SET IN FINAL POSITION, TEMPLATE AND MATCH DRILL TOP PLATE TO SUIT FINAL BOLT HOLE LOCATIONS.
10. ALL MISSING MATERIAL REF. NO.S TO BE BE UPDATED BY CDCI IF NEEDED.

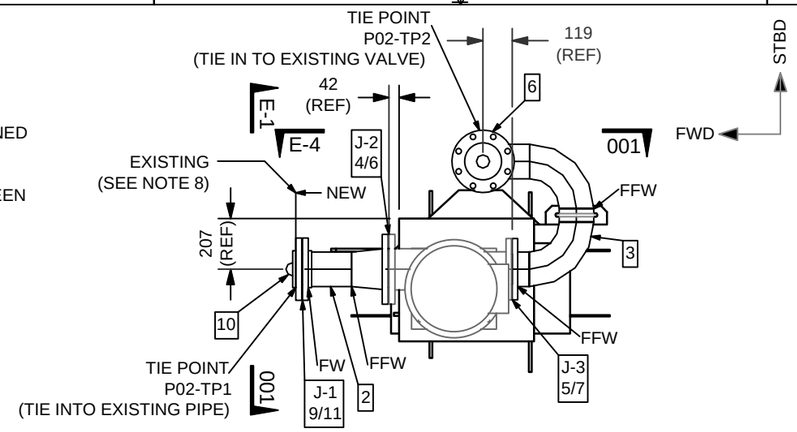

C-4 / 001 PLAN
LOOKING DOWN ON TANKTOP @ FR38
SCALE 1:25

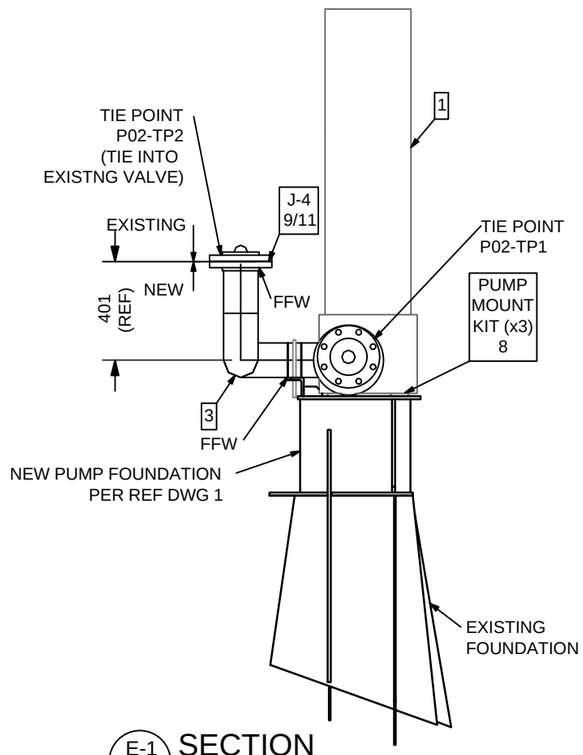

E-1 / 001 SECTION
LOOKING AFT ON TANKTOP @ FR38
SCALE 1:25

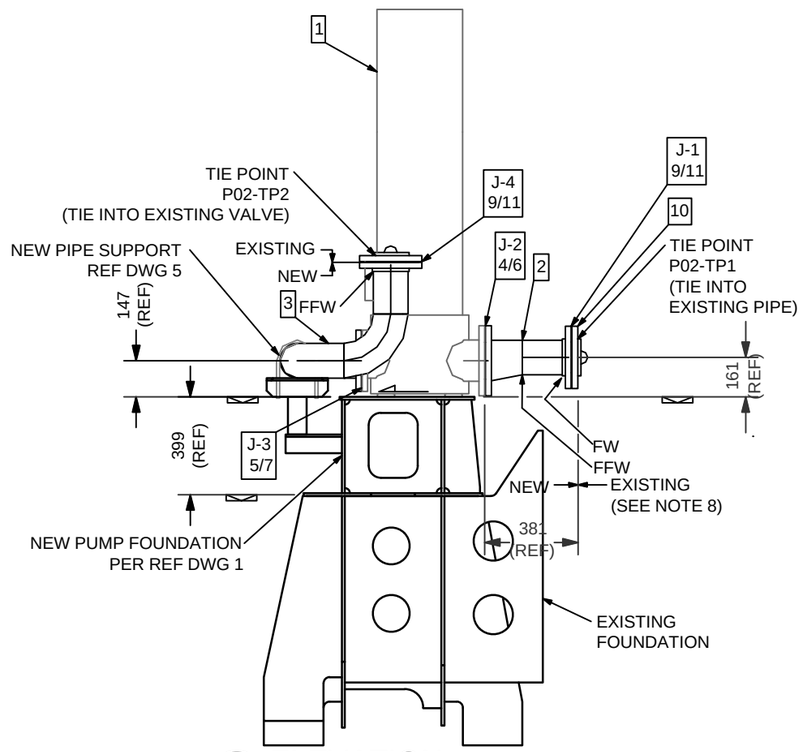

E-4 / 001 ELEVATION
LOOKING PORT ON TANKTOP @ FR38
SCALE 1:25

BILL OF MATERIALS

NO	DESCRIPTION	QTY	UNIT	MATERIAL REF.
1	PUMP P-02 SUBMERSIBLE BILGE & FIRE SYSTEM	1	EA	E0006-4
2	PIPE SPOOL 80302-SPL-0001-001	1	EA	NA
3	PIPE SPOOL 80302-SPL-0002-001	1	EA	NA
4	6" ISOLATION KIT EN 1092-1 PN16 3mm THK DURLON IGUARD 8500 TYPE E	1	KIT	2639-E0006-13.16
5	5" ISOLATION KIT EN 1092-1 PN16 3mm THK DURLON IGUARD 8500 TYPE E	1	KIT	2639-E0006-13.15
6	M20x80mm LG HEX BOLT EN1515-4 EN ISO 898-1 GR 5 ZINC PLATED C/W HVY HEX NUT EN 20898-2 GR 5 ZINC PLATED	8	EA	
7	M16x70mm LG HEX BOLT EN1515-4 EN ISO 898-1 GR 5 ZINC PLATED C/W HVY HEX NUT EN 20898-2 GR 5 ZINC PLATED	16	EA	
8	M10x40mm LG HEX BOLT ASME B18.2.3.5M ASTM A449 TYPE 1 GR 5, ZINC PLATED C/W HVY HEX NUT ASME B18.2.4.1M ASTM A536 GR 5, ZINC PLATED AND 2 FLAT WASHERS ASME B18.22M ASTM F844 GR 5, ZINC PLATED	4	EA	
9	5" GASKET ANSI B16.21 CL150 FF 3mm THK DURLON 8300	2	EA	2639-E0006-13.18
10	5" FLANGE SO ANSI B16.5 CL150 FF ASTM A105	1	EA	2639-E0009-13.10
11	3/4"x4"LG HEX BOLT B18.2.1 ASTM A193 GR 5, ZINC PLATED C/W HVY HEX NUT B18.2.2 ASTM A194 GR 5 ZINC PLATED	16	EA	
12	ADAPTER THRD 1/2"BSPP(M)x1/2"NPT(F) HEX,ASME B1.20.3, 315 SS, C/W SEAL RINGS (MCMASTER CARR P/N 4822T348 OR EQ.)	2	EA	
13	ADAPTER THRD 3/8"BSPP(M)x3/8"NPT(F) HEX,ASME B1.20.3, 315 SS, C/W SEAL RINGS (MCMASTER CARR P/N 4822T344 OR EQ.)	2	EA	
14	PLUG PIPE THRD 1/2"NPT SQR HEAD HEX, ANSI/MSS SP-114, ASTM A351, 316 SS, MCMASTER CARR P/N 4452K124 OR EQ.)	2	EA	
15	PLUG PIPE THRD 3/8"NPT SQR HEAD HEX, ANSI/MSS SP-114, ASTM A351, 316 SS, MCMASTER CARR P/N 4452K123 OR EQ.)	2	EA	

4
DESCRIPTION OF ITEMS 12 THRU 15 UPDATED.
VIEWS UPDATED TO SHOW PIPE SUPPORTS.
ADDITION OF REF DWG 5.

REVISION HISTORY

REV	DATE (YY/MM/DD)	DESCRIPTION	DWN	CHK	APP
4	2022-04-12	RE-ISSUED FOR CONSTRUCTION	BM	RS	TB
3	2022-03-23	RE-ISSUED FOR CONSTRUCTION	MB	RS	TB
2	2022-03-16	RE-ISSUED FOR CONSTRUCTION	EHQ	RS	TB
1	2022-03-09	RE-ISSUED FOR CONSTRUCTION	EHQ	RS	TB
0	2022-02-28	ISSUED FOR CONSTRUCTION	EHQ	RS	TB

REFERENCE DRAWINGS

NO.	DRAWING NO.	DRAWING TITLE	REV
5	2639-AMS-E06-26302-PS-0001-001	PUMP No. 2 PIPE SUPPORTS FABRICATION AND INSTALLATION	0
4	2639-AMS-E06-80302-RM-0001-001	SUBMERSIBLE BILGE & FIRE SYSTEM PUMP No. 2 REMOVAL	0
3	2639-AMS-E06-80302-SPL-0002-001	PIPING FABRICATION SPOOL NO.2	1
2	2639-AMS-E06-80302-SPL-0001-001	PIPING FABRICATION SPOOL NO.1	1
1	2639-AMS-E06-26302-RN-0001-001	SUBMERSIBLE BILGE & FIRE SYS. PUMP No.2 FND RENEWAL	1

ALL INFORMATION CONTAINED OR DISCLOSED IN THIS DRAWING IS CONFIDENTIAL AND PROPRIETARY, AND IS THE EXCLUSIVE PROPERTY OF ADAPTIVE MARINE SOLUTIONSINC. THIS DESIGN INFORMATION IS RESERVED FOR THE EXCLUSIVE USE OF THE CLIENT. ANY REPRODUCTION, COMMUNICATION OR DISTRIBUTION OF THIS INFORMATION IS PROHIBITED WITHOUT THE WRITTEN CONSENT OF ADAPTIVE MARINE SOLUTIONS INC.

AMS Adaptive Marine Solutions Inc.

CLIENT: DAVIE

DRAWING TITLE:
SUBMERSIBLE BILGE & FIRE SYSTEM
PUMP No. 2 INSTALLATION

PROJECT NO.:	JOB SPEC. NO.:	DATE (YY/MM/DD):
2639	E06	2022-04-12
DRAWN BY: BM	CHECKED BY: RS	APPROVED BY: TB

DRAWING NO.: 2639-AMS-E06-80302-IN-0001-001 REV. 4

A3